STANDARDS OF THE

TUBULAR EXCHANGER

MANUFACTURERS ASSOCIATION

TENTH EDITION

TUBULAR EXCHANGER MANUFACTURERS ASSOCIATION, INC.
Richard C. Byrne, Secretary
www.tema.org

NO WARRANTY

EXPRESSED OR IMPLIED

The Standards herein are recommended by The Tubular Exchanger Manufacturers Association, Inc. to assist users, engineers, and designers who specify, design, and install tubular exchangers. These standards are based upon sound engineering principles, research, and field experience in the manufacture, design, installation, and use of tubular exchangers. These standards may be subject to revision as further investigation or experience may show is necessary or desirable. Nothing herein shall constitute a warranty of any kind, expressed or implied, and warranty responsibility of any kind is expressly denied.

TEMA is a trademark of the Tubular Exchanger Manufacturers Association, Inc.

Copyright © 2019 Tubular Exchanger Manufacturers Association - All rights reserved. This book or any part thereof may not be reproduced in any form without the written permission of the publisher. Unauthorized copies subject to statutory penalties of $750 to $30,000 plus additional penalties. Printed in the United States of America.

MEMBERS OF THE
TUBULAR EXCHANGER MANUFACTURERS ASSOCIATION, INC.

Comprising Manufacturers of Various Types of Shell and Tube Heat Exchanger Equipment

Brask, Inc. ..... 2300 Louis Alleman Parkway
Sulphur, LA 70663

Cust-O-Fab, Inc. ..... 8888 West 21st Street
Sand Springs, OK 74063

Dunn Heat Exchangers, Inc. ..... 410 21st Street South
Texas City, TX 77592-3028

Energy Exchanger Company ..... 1844 N Garnett Road
Tulsa, OK 74116

Fabsco Shell and Tube, L.L.C ..... P.O. Box 988
Sapulpa, OK 74066

Graham Corporation ..... 20 Florence Avenue
Batavia, NY 14020

Heat Transfer Equipment Co. ..... 1515 N 93rd E Avenue
Tulsa, OK 74115

Hughes-Anderson Heat Exchangers, Inc. ..... 1001 N Fulton Avenue
Tulsa, OK 74115

Kennedy Tank & Manufacturing Co., Inc. ..... 833 East Sumner Avenue
Indianapolis, IN 46227

Krueger Engineering & Mfg. Co. Inc. ..... 12001 Hirsch Rd.
Houston, TX 77050

Joseph Oat Corporation ..... 2500 Broadway
Camden, NJ 08104

Ohmstede, Ltd. ..... 895 N Main St.
Beaumont, TX 77701

Perry Products Corp. ..... 25 Hainesport Mt. Laurel Road
Hainesport, NJ 08036

RAS Process Equipment ..... 324 Meadowbrook Road
Robbinsville, NJ 08691

Southern Heat Exchanger Corporation ..... P.O. Box 1850
Tuscaloosa, AL 35403

Steeltek, Inc. ..... 4141 S Jackson
Tulsa, OK 74107

Thermal Engineering International (USA) Inc. – Struthers Wells..... 18000 Studebaker Road, Suite 400
Cerritos, CA 90703

Ward Vessel and Exchanger Corporation ..... P.O. Box 44568
Charlotte, NC 28215

TUBULAR EXCHANGER MANUFACTURERS ASSOCIATION

CONTRIBUTING MEMBER COMPANIES AND TECHNICAL COMMITTEE MEMBERS

Brask Inc. ..... Sangeeta Bakshi
Jay Hennessey

Energy Exchanger Co. ..... Miles Duvall

Fabsco Shell and Tube, L.L.C ..... Sam Davis

Graham Corporation ..... Pete Brade

Heat Transfer Equipment Co. ..... Daniel Gaddis
Kyle Stein

Hughes-Anderson Heat Exchangers, Inc. ..... Jerry Barham

Kennedy Tank & Manufacturing Co., Inc. ..... JD Smith

Krueger Engineering & Mfg. Co. Inc. ..... Cris Smelley

Joseph Oat Corporation ..... Lawrence Bower

Perry Products Corp. ..... Ashok Shah

RAS Process Equipment ..... Jeff Polizzi

Southern Heat Exchanger Corporation ..... Jeremy Wolfe

Ward Vessel and Exchanger Corp. ..... Bill Huffman

.

PREFACE

Tenth Edition – 2019

The Tenth Edition of the TEMA Standards was prepared by the Technical Committee of the Tubular Exchanger Manufacturers Association. In addition to updated graphics and charts with a modernized appearance, numerical analysis of flexible shell elements, comprehensive rules for the design of horizontal saddle supports, dimensional data for various standard flanges, guidelines for distributor belts, and a fouling mitigation design study have been added.

The Editor acknowledges with appreciation the contributions by Tony Paulin and Fred Hendrix at Paulin Research Group (PRG) for assistance with the Flexible Shell Element numerical analysis, and the Heat Transfer Research Institute (HTRI) for their guidance on distributor belts and with fouling mitigation.

The Editor also acknowledges with appreciation the many years of service and contributions by Jim Harrison to the TEMA Technical Committee.

Daniel Gaddis, Editor

CONTENTS

Section				Page
			MEMBERSHIP LIST	iii
			TECHNICAL COMMITTEE	iv
			PREFACE	v
			NOTES TO USERS	viii
1	N		NOMENCLATURE	
		1	Size Numbering and Type Designation—Recommended Practice	1-1
		2	Nomenclature of Heat Exchanger Components	1-3
2	F		FABRICATION TOLERANCES	
		1	External Dimensions, Nozzle and Support Locations	2-1
		2	Recommended Fabrication Tolerances	2-2
		3	Tubesheets, Partitions, Covers, and Flanges	2-3
		4	Flange Face Permissible Imperfections	2-3
		5	Peripheral Gasket Surface Flatness	2-3
3	G		GENERAL FABRICATION AND PERFORMANCE INFORMATION	
		1	Shop Operation	3-4
		2	Inspection	3-4
		3	Nameplates	3-4
		4	Drawings and Code Data Reports	3-4
		5	Guarantees	3-5
		6	Preparation of Heat Exchangers for Shipment	3-6
		7	General Construction Features of TEMA Standard Heat Exchangers	3-7
4	E		INSTALLATION, OPERATION, AND MAINTENANCE	
		1	Performance of Heat Exchangers	4-1
		2	Installation of Heat Exchangers	4-1
		3	Operation of Heat Exchangers	4-2
		4	Maintenance of Heat Exchangers	4-4
		5	Changes to Configuration of Heat Exchangers	4-8
5	RCB		MECHANICAL STANDARDS TEMA CLASS RCB HEAT EXCHANGERS	
		1	Scope and General Requirements	5.1-1
		2	Tubes	5.2-1
		3	Shells and Shell Covers	5.3-1
		4	Baffles and Support Plates	5.4-1
		5	Floating End Construction	5.5-1
		6	Gaskets	5.6-1
		7	Tubesheets	5.7-1
		8	Flexible Shell Elements	5.8-1
		9	Channels, Covers, and Bonnets	5.9-1
		10	Nozzles	5.10-1
		11	End Flanges and Bolting	5.11-1
6	V		FLOW INDUCED VIBRATION	
		1	Scope and General	6-1
		2	Vibration Damage Patterns	6-1
		3	Failure Regions	6-1
		4	Dimensionless Numbers	6-2
		5	Natural Frequency	6-3
		6	Axial Tube Stress	6-10
		7	Effective Tube Mass	6-10
		8	Damping	6-13

CONTENTS

Section				Page
6	V		FLOW INDUCED VIBRATION (continued)	
		9	Shell Side Velocity Distribution	6-15
		10	Estimate of Critical Flow Velocity	6-18
		11	Vibration Amplitude	6-20
		12	Acoustic Vibration	6-21
		13	Design Considerations	6-25
		14	Selected References	6-27
7	T		THERMAL RELATIONS	
		1	Scope and Basic Relations	7-1
		2	Fouling	7-2
		3	Fluid Temperature Relations	7-3
		4	Mean Metal Temperatures of Shell and Tubes	7-5
8	P		PHYSICAL PROPERTIES OF FLUIDS	
		1	Fluid Density	8-1
		2	Specific Heat	8-1
		3	Heat Content	8-2
		4	Thermal Conductivity	8-2
		5	Viscosity	8-2
		6	Critical Properties	8-3
		7	Properties of Gas and Vapor Mixtures	8-3
		8	Selected References	8-4
9	D		GENERAL INFORMATION	
			(See detailed Table of Contents)	9-1
10	RGP		RECOMMENDED GOOD PRACTICE	
	G-7.1.1		Horizontal Vessel Supports	10-2
	G-7.1.2		Vertical Vessel Supports	10-17
	G-7.2		Lifting Lugs	10-22
	G-7.3		Wind and Seismic Design	10-24
	RCB-2		Plugging Tubes in Tube Bundles	10-24
	RCB-4		Entrance and Exit Areas	10-24
	RCB-7		Tubesheets	10-31
	RCB-10.6		Nozzle Loadings	10-32
	RCB-11.5		Flange Design	10-32
	RCB-12		Finite Element Analysis Guidelines	10-33
	T-2		Fouling	10-34
Appendix A – Tubesheets				A-1

NOTES TO USERS OF THE TEMA STANDARDS

Three classes of Mechanical Standards, R, C, and B, reflecting acceptable designs for various service applications, are presented. The user should refer to the definition of each class and choose the one that best fits the specific need.

Corresponding subject matter in the three classes of Mechanical Standards is covered by paragraphs identically numbered except for the class prefix letter. Paragraph numbers preceded by RCB indicates that all three classes are identical. Any reference to a specific paragraph must be preceded by the class designation.

The Recommended Good Practice section has been prepared to assist the designer in areas outside the scope of the basic Standards. Paragraphs in the Standards having additional information in the RGP section are marked with an asterisk (*). The reference paragraph in the RGP section has the identical paragraph number, but with an "RGP" prefix.

It is the intention of the Tubular Exchanger Manufacturers Association that this edition of its Standards may be used beginning with the date of issuance, and that its requirements supersede those of the previous edition six months from such date of issuance, except for heat exchangers contracted for prior to the end of the six month period. For this purpose, the date of issuance is April 8, 2019.

Questions by registered users on interpretation of the TEMA Standards should be submitted online at www.tema.org. Questions requiring development of new or revised technical information will only be answered through an addendum or a new edition of the Standards.

Upon agreement between purchaser and fabricator, exceptions to TEMA requirements are acceptable. An exchanger may still be considered as meeting TEMA requirements as long as the exception is documented.

N-1 SIZE NUMBERING AND TYPE DESIGNATION - RECOMMENDED PRACTICE

It is recommended that heat exchanger size and type be designated by numbers and letters as described below.

N-1.1 SIZE

Sizes of shells (and tube bundles) shall be designated by numbers describing shell (and tube bundle) diameters and tube lengths, as follows:

N-1.1.1 NOMINAL DIAMETER

The nominal diameter shall be the inside diameter of the shell in inches (mm), rounded to the nearest integer. For kettle reboilers the nominal diameter shall be the port diameter followed by the shell diameter, each rounded to the nearest integer.

N-1.1.2 NOMINAL LENGTH

The nominal length shall be the tube length in inches (mm). Tube length for straight tubes shall be taken as the actual overall length. For U-tubes the length shall be taken as the approximate straight length from end of tube to bend tangent.

N-1.2 TYPE

Type designation for complete assemblies shall be by letters describing front end stationary head types, shell types, and rear end head types, in that order, as indicated in Figure N-1.2. Type designations shall be used as applicable for partial heat exchanger assemblies.

N-1.3 TYPICAL EXAMPLES

N-1.3.1

Split-ring floating head exchanger with removable channel and cover, single pass shell, 23 1/4" (591 mm) inside diameter with tubes 16' (4877 mm) long. SIZE 23-192 (591-4877) TYPE AES.

N-1.3.2

U-tube exchanger with bonnet type stationary head, split flow shell, 19" (483 mm) inside diameter with tubes 7' (2134 mm) straight length. SIZE 19-84 (483-2134) TYPE BGU.

N-1.3.3

Pull-through floating head kettle type reboiler having stationary head integral with tubesheet, 23" (584 mm) port diameter and 37" (940 mm) inside shell diameter with tubes 16' (4877 mm) long. SIZE 23/37-192 (584/940 -4877) TYPE CKT.

N-1.3.4

Fixed tubesheet exchanger with removable channel and cover, bonnet type rear head, two pass shell, 33 1/8" (841 mm) inside diameter with tubes 8' (2438 mm) long. SIZE 33-96 (841-2438) TYPE AFM.

N-1.3.5

Fixed tubesheet exchanger having stationary and rear heads integral with tubesheets, single pass shell, 17" (432 mm) inside diameter with tubes 16' (4877 mm) long. SIZE 17-192 (432-4877) TYPE NEN.

N-1.4 SPECIAL DESIGNS

Special designs are not covered and may be described as best suits the manufacturer. For example, a single tube pass, fixed tubesheet exchanger with conical heads may be described as "TYPE BEM with Conical Heads". A pull-through floating head exchanger with an integral shell cover may be described as "TYPE AET with Integral Shell Cover".

 ©Tubular Exchanger Manufacturers Association, Inc.

FIGURE N-1.2

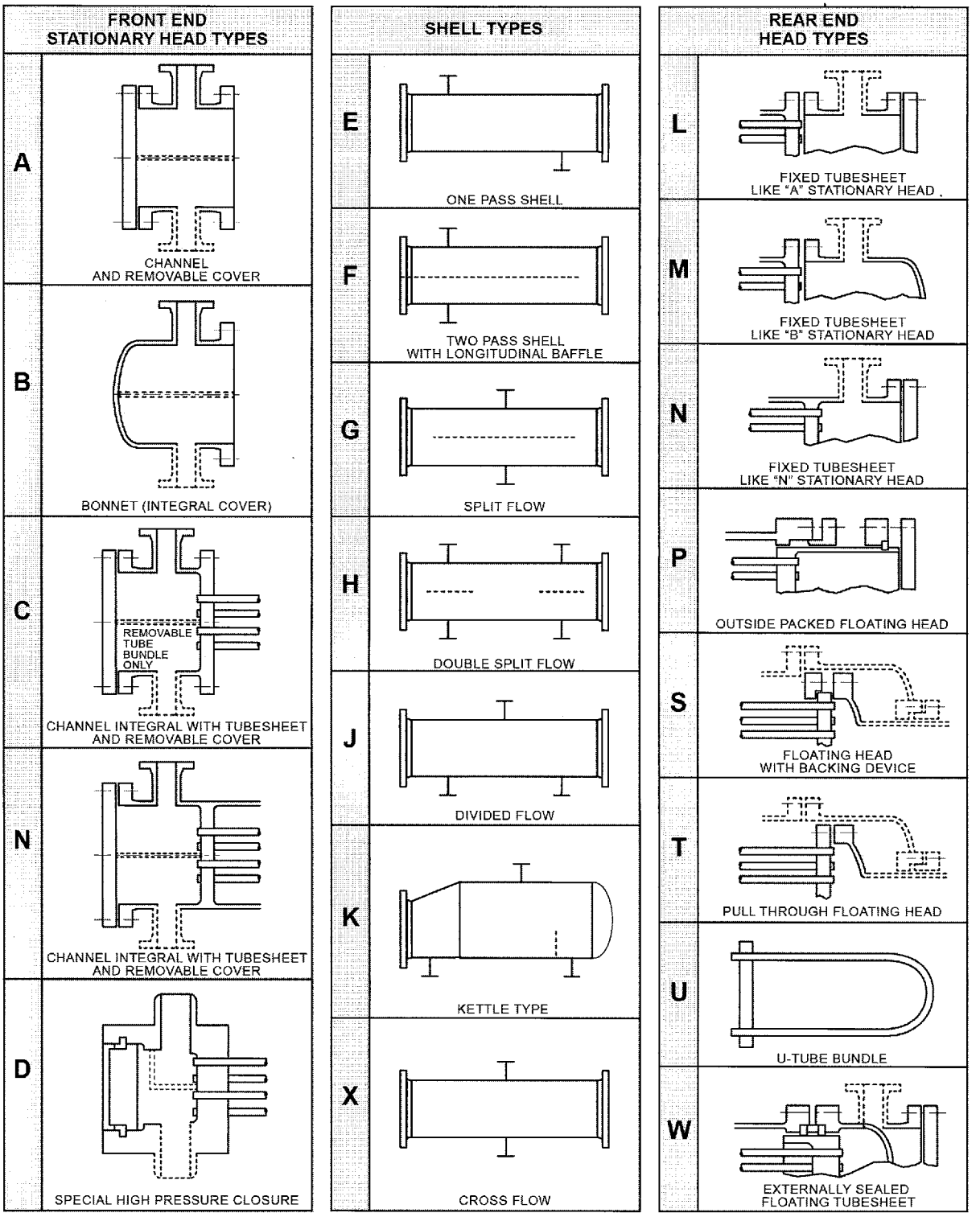

 ©Tubular Exchanger Manufacturers Association, Inc.

N-2 NOMENCLATURE OF HEAT EXCHANGER COMPONENTS

For the purpose of establishing standard terminology, Figure N-2 illustrates various types of heat exchangers. Typical parts and connections, for illustrative purposes only, are numbered for identification in Table N-2.

TABLE N-2

1. Stationary Head-Channel
2. Stationary Head-Bonnet
3. Stationary Head Flange-Channel or Bonnet
4. Channel Cover
5. Stationary Head Nozzle
6. Stationary Tubesheet
7. Tubes
8. Shell
9. Shell Cover
10. Shell Flange-Stationary Head End
11. Shell Flange-Rear Head End
12. Shell Nozzle
13. Shell Cover Flange
14. Expansion Joint
15. Floating Tubesheet
16. Floating Head Cover
17. Floating Head Cover Flange
18. Floating Head Backing Device
19. Split Shear Ring
20. Slip-on Backing Flange
21. Floating Head Cover-External
22. Floating Tubesheet Skirt
23. Packing Box
24. Packing
25. Packing Gland
26. Lantern Ring
27. Tierods and Spacers
28. Transverse Baffles or Support Plates
29. Impingement Plate
30. Longitudinal Baffle
31. Pass Partition
32. Vent Connection
33. Drain Connection
34. Instrument Connection
35. Support Saddle
36. Lifting Lug
37. Support Bracket
38. Weir
39. Liquid Level Connection
40. Floating Head Support

FIGURE N-2

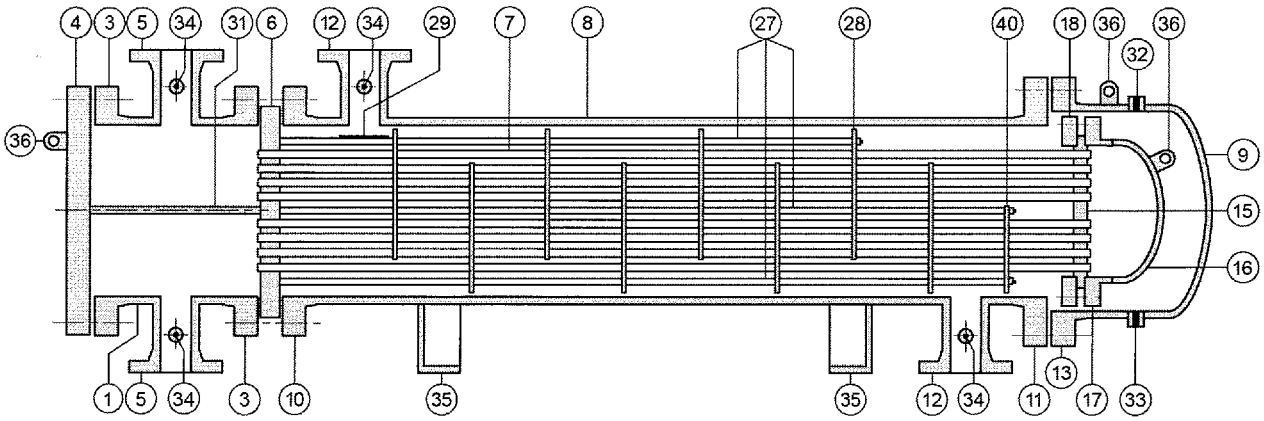

AES

 ©Tubular Exchanger Manufacturers Association, Inc.

FIGURE N-2 (continued)

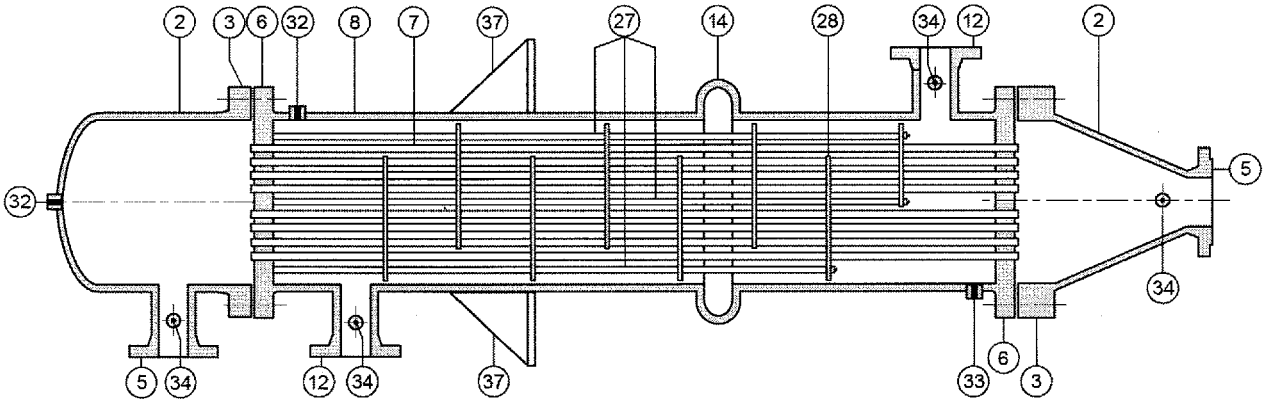

BEM

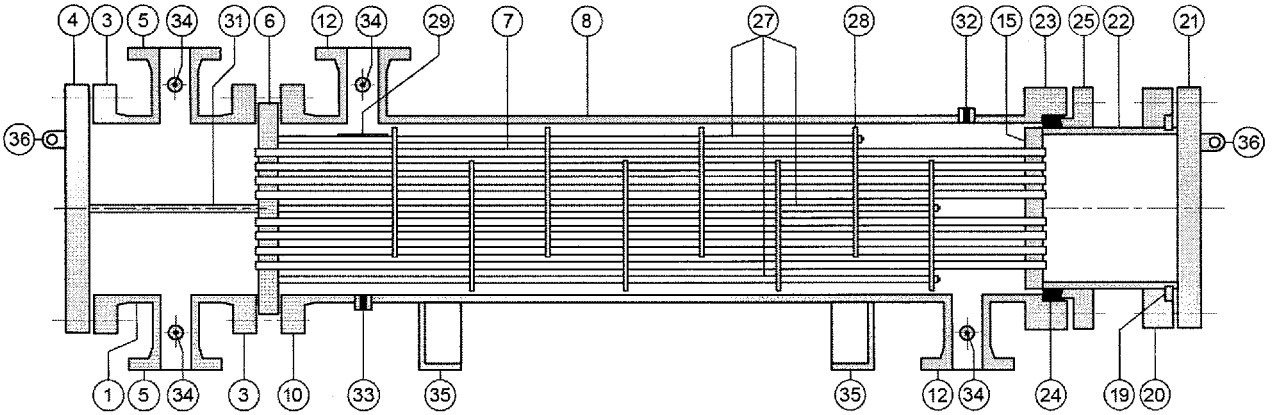

AEP

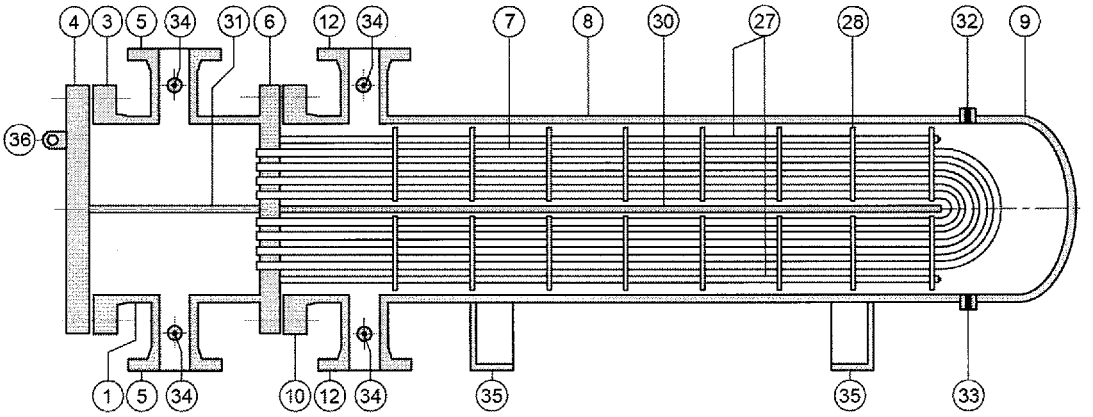

CFU

©Tubular Exchanger Manufacturers Association, Inc.

FIGURE N-2 (continued)

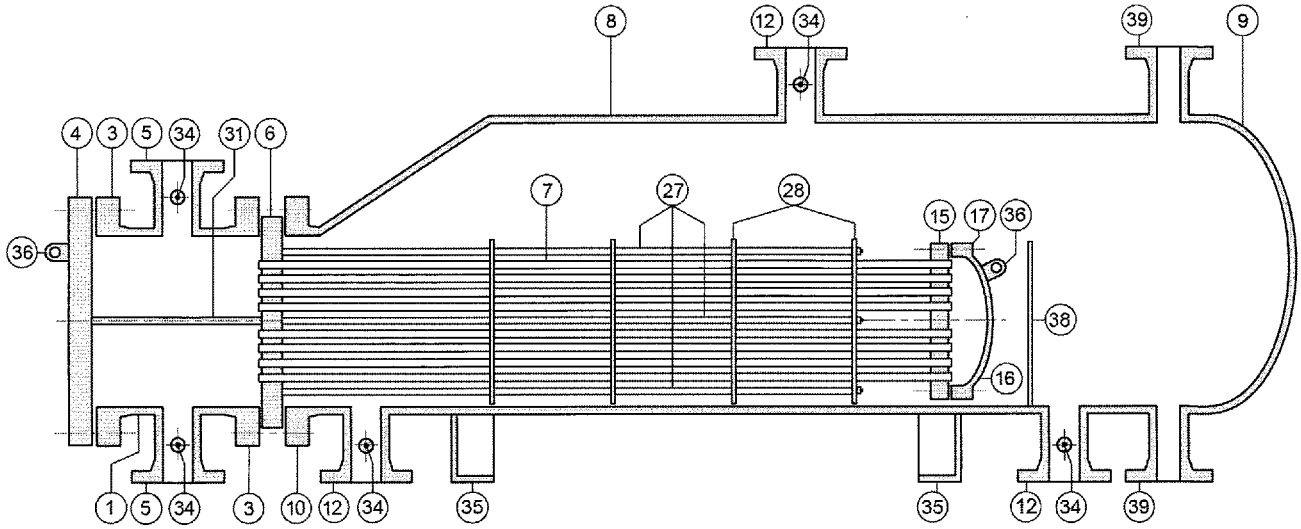

AKT

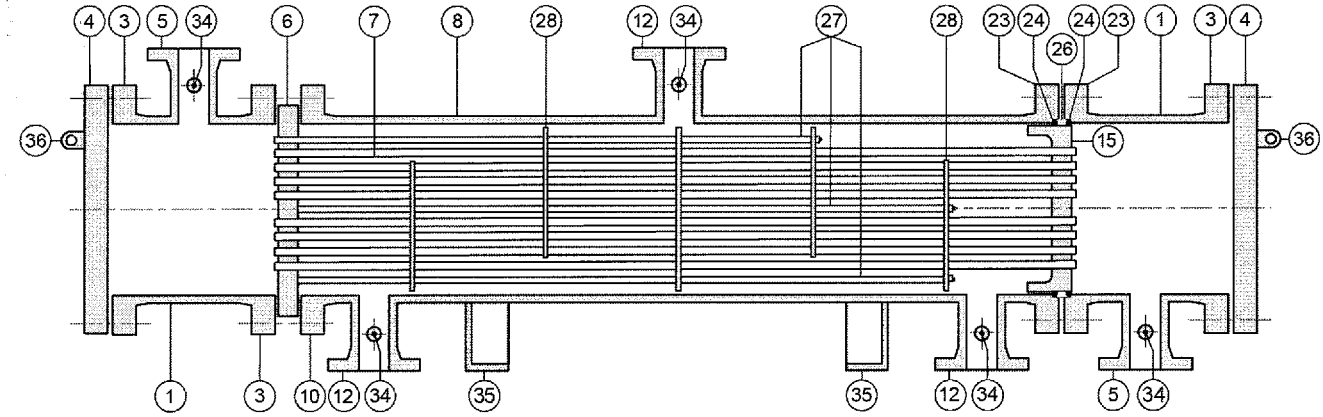

AJW

©Tubular Exchanger Manufacturers Association, Inc.

This page intentionally blank

©Tubular Exchanger Manufacturers Association, Inc.

F-1 EXTERNAL DIMENSIONS, NOZZLE AND SUPPORT LOCATIONS

Standard tolerances for process flow nozzles and support locations and projections are shown in Figure F-1. Dimensions in ( ) are millimeters.

FIGURE F-1

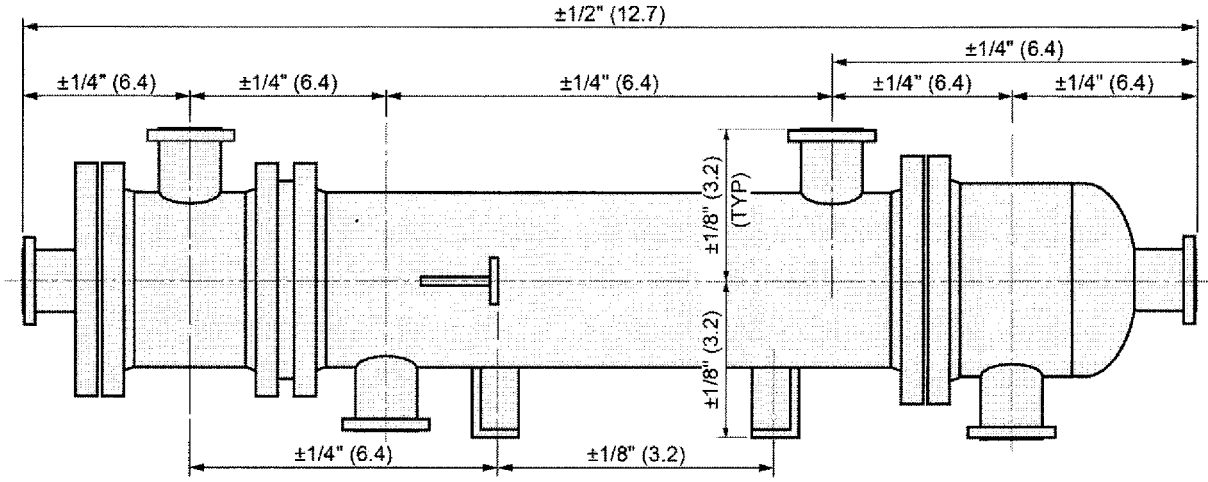

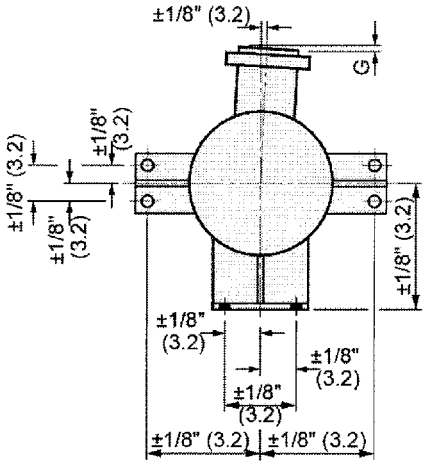

CONNECTION NOZZLE ALIGNMENT AND SUPPORT TOLERANCES

NOMINAL NOZZLE SIZE	G MAX
2" - 4" INCLUSIVE	1/16" (1.6)
6" - 12" INCLUSIVE	3/32" (2.4)
14" - 36" INCLUSIVE	3/16" (4.8)
OVER 36"	1/4" (6.4)
NOTE: THIS TABLE APPLIES TO NOZZLES CONNECTING TO EXTERNAL PIPING ONLY.	

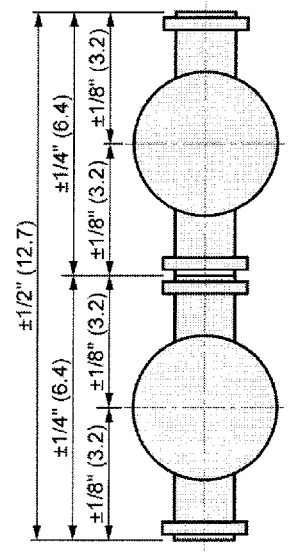

STACKED EXCHANGERS

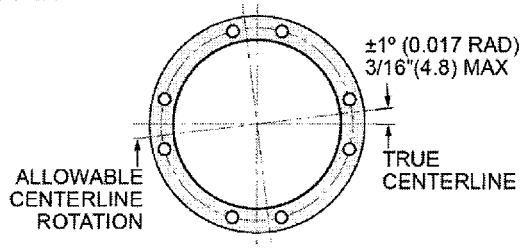

ROTATIONAL TOLERANCE ON NOZZLE FACES AT BOLT CIRCLE

 ©Tubular Exchanger Manufacturers Association, Inc.

F-2 RECOMMENDED FABRICATION TOLERANCES

Fabrication tolerances normally required to maintain process flow nozzle and support locations are shown in Figure F-2. These tolerances may be adjusted as necessary to meet the tolerances shown in Figure F-1. Dimensions in ( ) are millimeters.

FIGURE F-2

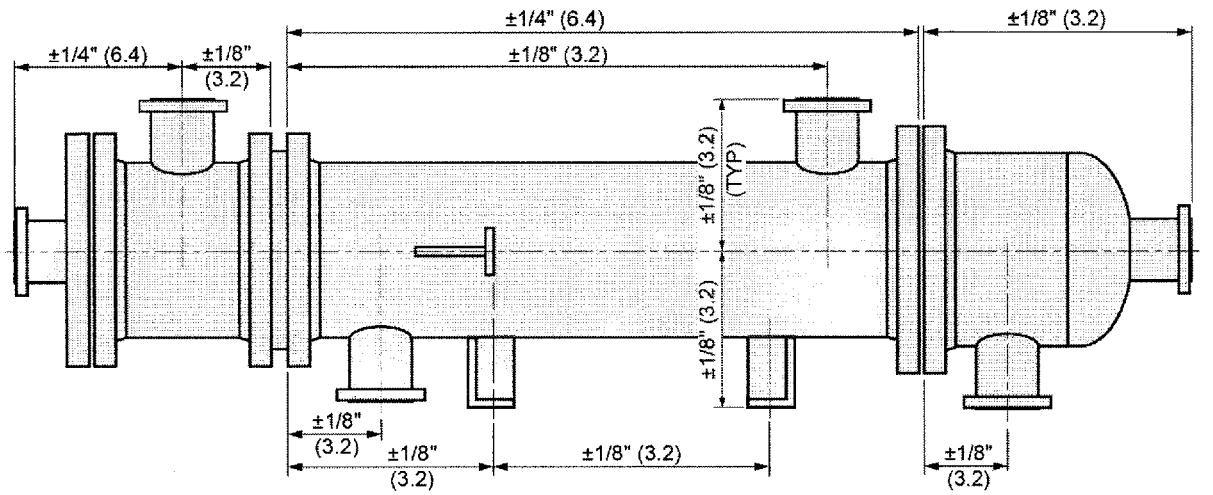

 ©Tubular Exchanger Manufacturers Association, Inc.

F-3 TUBESHEETS, PARTITIONS, COVERS, AND FLANGES

The standard clearances and tolerances applying to tubesheets, partitions, covers and flanges are shown in Figure F-3. Dimensions in ( ) are millimeters.

FIGURE F-3

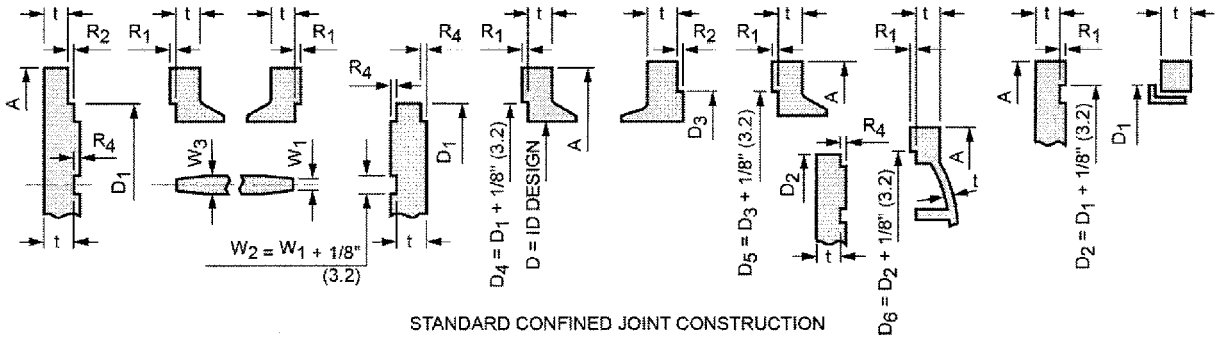

STANDARD CONFINED JOINT CONSTRUCTION

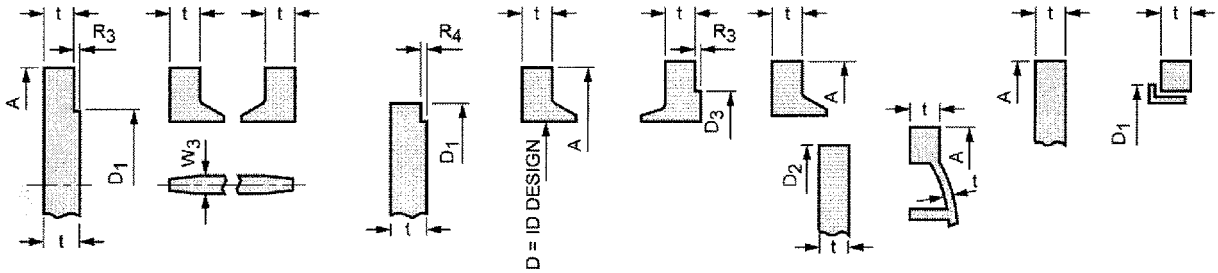

STANDARD UNCONFINED PLAIN FACE JOINT CONSTRUCTION

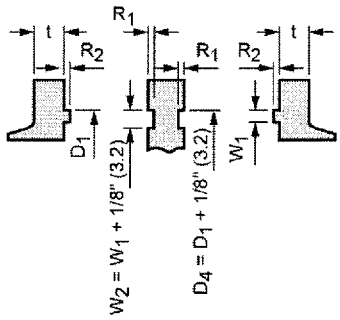

ALTERNATE TONGUE AND GROOVE JOINT

DIMENSIONS		TOLERANCES	
A		+1/4" -1/8"	(+6.4 -3.2)
D_1 D_2 D_3 D_4 D_5 D_6		±1/32"	(±0.8)
t		±1/16"	(±1.6)
R_1 = 3/16"	(4.8)	+0" -1/32"	(+0 -0.8)
R_2 = 1/4"	(6.4)	+1/32" -0"	(+0.8 -0)
R_3 = 1/16"	(1.6)	+1/32" -0"	(+0.8 -0)
R_4 = 3/16"	(4.8)	-1/32"	(-0.8) (SEE NOTE 1)
W_1 W_2 W_3		±1/32"	(±0.8)

1. THIS FIGURE IS NOT INTENDED TO PROHIBIT UNMACHINED TUBESHEET FACES AND FLAT COVER FACES. THEREFORE, NO PLUS TOLERANCE IS SHOWN FOR R4.
2. NEGATIVE TOLERANCE SHALL NOT BE CONSTRUED TO MEAN THAT FINAL DIMENSIONS CAN BE LESS THAN THAT REQUIRED BY DESIGN CALCULATIONS.
3. FOR PERIPHERAL GASKETS, "CONFINED" MEANS "CONFINED ON THE OD."
4. DETAILS ARE TYPICAL AND DO NOT PRECLUDE THE USE OF OTHER DETAILS WHICH ARE FUNCTIONALLY EQUIVALENT.
5. FOR UNITS OVER 60" (1524) TO 100" (2540) DIAMETER, TOLERANCES "D" AND "W" MAY BE INCREASED TO ± 1/16" (1.6).

F-4 FLANGE FACE PERMISSIBLE IMPERFECTIONS

Imperfections in the flange facing finish, for ASME B16.5 flanges with ASME B16.20 gasket sizes used either for nozzle or body flanges, shall not exceed the dimensions shown in Figure F-4. For custom flanges, it is recommended that permissible imperfections should be per ASME PCC-1 Appendix D.

F-5 PERIPHERAL GASKET SURFACE FLATNESS

Peripheral gasket contact surfaces shall have a flatness tolerance of 1/32" (0.8 mm) maximum deviation from any reference plane. This maximum deviation shall not occur in less than a 20° (0.3 Rad) arc.

 ©Tubular Exchanger Manufacturers Association, Inc.

FIGURE F-4

PERMISSIBLE IMPERFECTIONS IN FLANGE FACING FINISH
FOR RAISED FACE AND LARGE MALE AND FEMALE FLANGES [1,2]

NPS	Maximum Radial Projections of Imperfections Which Are No Deeper Than the Bottom of the Serrations, in.(mm)	Maximum Depth and Maximum Radial Projection of Imperfections Which Are Deeper Than the Bottom of the Serrations, in.(mm)
1/2	1/8 (3.2)	1/16 (1.6)
3/4	1/8 (3.2)	1/16 (1.6)
1	1/8 (3.2)	1/16 (1.6)
1 1/4	1/8 (3.2)	1/16 (1.6)
1 1/2	1/8 (3.2)	1/16 (1.6)
2	1/8 (3.2)	1/16 (1.6)
2 1/2	1/8 (3.2)	1/16 (1.6)
3	3/16 (4.8)	1/16 (1.6)
3 1/2	1/4 (6.4)	1/8 (3.2)
4	1/4 (6.4)	1/8 (3.2)
5	1/4 (6.4)	1/8 (3.2)
6	1/4 (6.4)	1/8 (3.2)
8	5/16 (7.9)	1/8 (3.2)
10	5/16 (7.9)	3/16 (4.8)
12	5/16 (7.9)	3/16 (4.8)
14	5/16 (7.9)	3/16 (4.8)
16	3/8 (9.5)	3/16 (4.8)
18	1/2 (12.7)	1/4 (6.4)
20	1/2 (12.7)	1/4 (6.4)
24	1/2 (12.7)	1/4 (6.4)

NOTES:
(1) Imperfections must be separated by at least four times the permissible radial projection.
(2) Protrusions above the serrations are not permitted

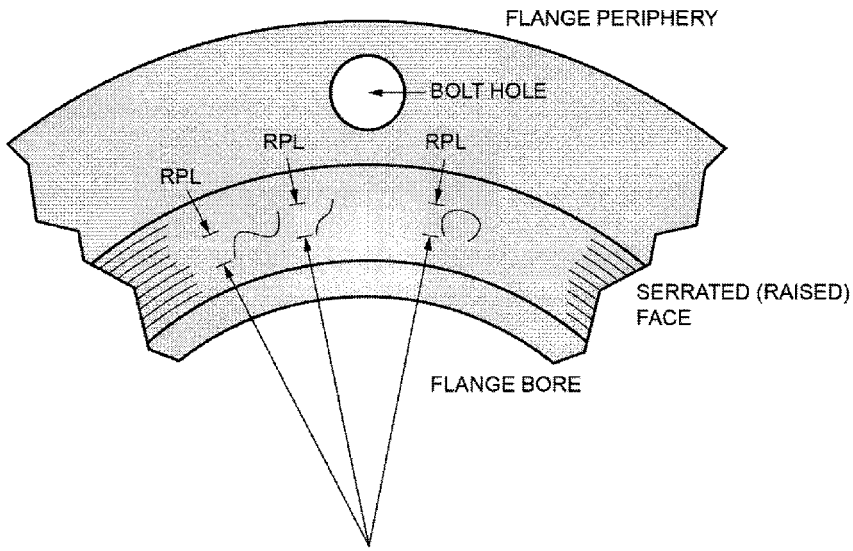

SKETCH SHOWING RADIAL PROJECTED LENGTH (RPL) SERRATED GASKET FACE DAMAGE

 ©Tubular Exchanger Manufacturers Association, Inc.

DEFINITIONS

1. Baffle is a device to direct the shell side fluid across the tubes for optimum heat transfer.
2. Double Tubesheet Construction is a type of construction in which two (2) spaced tubesheets or equivalent are employed in lieu of the single tubesheet at one or both ends of the heat exchanger.
3. Effective Shell and Tube Side Design Pressures are the resultant load values expressed as uniform pressures used in the determination of tubesheet thickness for fixed tubesheet heat exchangers and are functions of the shell side design pressure, the tube side design pressure, the equivalent differential expansion pressure and the equivalent bolting pressure.
4. Equivalent Bolting Pressure is the pressure equivalent resulting from the effects of bolting loads imposed on tubesheets in a fixed tubesheet heat exchanger when the tubesheets are extended for bolting as flanged connections.
5. Equivalent Differential Expansion Pressure is the pressure equivalent resulting from the effect of tubesheet loadings in a fixed tubesheet heat exchanger imposed by the restraint of differential thermal expansion between shell and tubes.
6. Expanded Tube Joint is the tube-to-tubesheet joint achieved by mechanical or explosive expansion of the tube into the tube hole in the tubesheet.
7. Expansion Joint "J" Factor is the ratio of the spring rate of the expansion joint to the sum of the axial spring rate of the shell and the spring rate of the expansion joint. Refer to section A.1.5.1
8. Flange Load Concentration Factors are factors used to compensate for the uneven application of bolting moments due to large bolt spacing.
9. Minimum and Maximum Baffle and Support Spacings are design limitations for the spacing of baffles to provide for mechanical integrity and thermal and hydraulic effectiveness of the bundle. The possibility for induced vibration has not been considered in establishing these values.
10. Normal Operating Conditions of a shell and tube heat exchanger are the thermal and hydraulic performance requirements generally specified for sizing the heat exchanger.
11. Pulsating Fluid Conditions are conditions of flow generally characterized by rapid fluctuations in pressure and flow rate resulting from sources outside of the heat exchanger.
12. Seismic Loadings are forces and moments resulting in induced stresses on any member of a heat exchanger due to pulse mode or complex waveform accelerations to the heat exchanger, such as those resulting from earthquakes.
13. Shell and Tube Mean Metal Temperatures are the average metal temperatures through the shell and tube thicknesses integrated over the length of the heat exchanger for a given steady state operating condition.
14. Shut-Down is the condition of operation which exists from the time of steady state operating conditions to the time that flow of both process streams has ceased.
15. Start-Up is the condition of operation which exists from the time that flow of either or both process streams is initiated to the time that steady state operating conditions are achieved.
16. Support plate is a device to support the bundle or to reduce unsupported tube span without consideration for heat transfer.
17. Tubesheet Ligament is the shortest distance between edge of adjacent tube holes in the tube pattern.
18. Welded Tube Joint is a tube-to-tubesheet joint where the tube is welded to the tubesheet.

 ©Tubular Exchanger Manufacturers Association, Inc.

FIGURE G-5.2 HEAT EXCHANGER SPECIFICATION SHEET

1				Job No.		
2	Customer			Reference No.		
3	Address			Proposal No.		
4	Plant Location			Date	Rev.	
5	Service of Unit			Item No.		
6	Size	Type	(Hor/Vert)	Connected in	Parallel	Series
7	Surf/Unit (Gross/Eff.)		sq ft; Shells/Unit	Surf/Shell (Gross/Eff.)		sq ft
8	**PERFORMANCE OF ONE UNIT**					
9	Fluid Allocation		Shell Side	Tube Side		
10	Fluid Name					
11	Fluid Quantity Total	lb/hr				
12	Vapor (In|Out)		|	|		
13	Liquid		|	|		
14	Steam		|	|		
15	Water		|	|		
16	Noncondensable		|	|		
17	Temperature	°F	|	|		
18	Specific Gravity		|	|		
19	Viscosity, Liquid	cP	|	|		
20	Molecular Weight, Vapor		|	|		
21	Molecular Weight, Noncondensable		|	|		
22	Specific Heat	BTU / lb °F	|	|		
23	Thermal Conductivity	BTU ft / hr sq ft °F	|	|		
24	Latent Heat	BTU / lb @ °F				
25	Inlet Pressure	psia				
26	Velocity	ft / sec				
27	Pressure Drop, Allow. /Calc.	psi	/	/		
28	Fouling Resistance (Min.)	hr sq ft °F / BTU				
29	Heat Exchanged		BTU / hr MTD (Corrected)			°F
30	Transfer Rate, Service		Clean			BTU / hr sq ft °F
31	**CONSTRUCTION OF ONE SHELL**				Sketch (Bundle/Nozzle Orientation)	
32			Shell Side	Tube Side		
33	Design / Test Pressure	psig	/	/		
34	Design Temp. Max/Min	°F	/	/		
35	No. Passes per Shell					
36	Corrosion Allowance	in				
37	Connections	In				
38	Size &	Out				
39	Rating	Intermediate				
40	Tube No.	OD	in;Thk (Min/Avg)	in;Length	ft;Pitch	in ◁30 △60 ⊟90 ◇45
41	Tube Type			Material		
42	Shell	ID	OD in	Shell Cover	(Integ.)	(Remov.)
43	Channel or Bonnet			Channel Cover		
44	Tubesheet-Stationary			Tubesheet-Floating		
45	Floating Head Cover			Impingement Protection		
46	Baffles-Cross		Type	%Cut (Diam/Area)	Spacing: c/c	Inlet in
47	Baffles-Long			Seal Type		
48	Supports-Tube		U-Bend		Type	
49	Bypass Seal Arrangement			Tube-to-Tubesheet Joint		
50	Expansion Joint			Type		
51	pv^2-Inlet Nozzle		Bundle Entrance		Bundle Exit	
52	Gaskets-Shell Side			Tube Side		
53	Floating Head					
54	Code Requirements				TEMA Class	
55	Weight / Shell		Filled with Water		Bundle	lb
56	Remarks					
57						
58						
59						
60						
61						

©Tubular Exchanger Manufacturers Association, Inc.

FIGURE G-5.2M HEAT EXCHANGER SPECIFICATION SHEET

1				Job No.			
2	Customer			Reference No.			
3	Address			Proposal No.			
4	Plant Location			Date		Rev.	
5	Service of Unit			Item No.			
6	Size	Type	(Hor/Vert)	Connected in		Parallel	Series
7	Surf/Unit (Gross/Eff.)		Sq m; Shells/Unit	Surf/Shell (Gross/Eff.)			sq m
8	**PERFORMANCE OF ONE UNIT**						
9	Fluid Allocation			Shell Side		Tube Side	
10	Fluid Name						
11	Fluid Quantity Total		kg/Hr				
12	Vapor (In/Out)			|		|	
13	Liquid			|		|	
14	Steam			|		|	
15	Water			|		|	
16	Noncondensable			|		|	
17	Temperature (In/Out)		°C	|		|	
18	Specific Gravity			|		|	
19	Viscosity, Liquid		cP	|		|	
20	Molecular Weight, Vapor			|		|	
21	Molecular Weight, Noncondensable			|		|	
22	Specific Heat		J/kg °C	|		|	
23	Thermal Conductivity		W/m °C	|		|	
24	Latent Heat		J/kg @ °C				
25	Inlet Pressure		kPa(abs.)				
26	Velocity		m/sec				
27	Pressure Drop, Allow. /Calc.		kPa	/		/	
28	Fouling Resistance (Min.)		Sq m °C / W				
29	Heat Exchanged			W / MTD (Corrected)			°C
30	Transfer Rate, Service			Clean			W/Sq m °C
31	**CONSTRUCTION OF ONE SHELL**					Sketch (Bundle/Nozzle Orientation)	
32			Shell Side	Tube Side			
33	Design / Test Pressure		kPag	/	/		
34	Design Temp. Max/Min		°C	/	/		
35	No. Passes per Shell						
36	Corrosion Allowance		mm				
37	Connections	In					
38	Size &	Out					
39	Rating	Intermediate					
40	Tube No.	OD	mm;Thk (Min/Avg)	mm;Length	mm;Pitch	mm	30 60 90 45
41	Tube Type				Material		
42	Shell	ID	OD mm		Shell Cover	(Integ.)	(Remov.)
43	Channel or Bonnet				Channel Cover		
44	Tubesheet-Stationary				Tubesheet-Floating		
45	Floating Head Cover				Impingement Protection		
46	Baffles-Cross		Type		%Cut (Diam/Area)	Spacing: c/c	Inlet mm
47	Baffles-Long				Seal Type		
48	Supports-Tube		U-Bend			Type	
49	Bypass Seal Arrangement				Tube-to-Tubesheet Joint		
50	Expansion Joint				Type		
51	ρv^2-Inlet Nozzle		Bundle Entrance			Bundle Exit	
52	Gaskets-Shell Side				Tube Side		
53	Floating Head						
54	Code Requirements					TEMA Class	
55	Weight / Shell		Filled with Water			Bundle	kg
56	Remarks						
57							
58							
59							
60							
61							

©Tubular Exchanger Manufacturers Association, Inc.

SECTION 3 GENERAL FABRICATION AND PERFORMANCE INFORMATION

G-1 SHOP OPERATION

The detailed methods of shop operation are left to the discretion of the manufacturer in conformity with these Standards.

G-2 INSPECTION

G-2.1 MANUFACTURER'S INSPECTION

Inspection and testing of units will be provided by the manufacturer unless otherwise specified. The manufacturer shall carry out the inspections required by the Code, customer specifications, and also inspections required by state and local codes when the purchaser specifies the plant location.

G-2.2 PURCHASER'S INSPECTION

The purchaser shall have the right to make inspections during fabrication and to witness any tests when he has so requested. Advance notification shall be given as agreed between the manufacturer and the purchaser. Inspection by the purchaser shall not relieve the manufacturer of his responsibilities. Any additional tests required by the purchaser, above those already agreed to, will be to the purchaser's account. Cost for remedial work as a result of these additional tests will also be to the purchaser's account.

G-3 NAMEPLATES

G-3.1 MANUFACTURER'S NAMEPLATE

A suitable manufacturer's nameplate of corrosion resistant material shall be permanently attached to the head end or the shell of each TEMA exchanger. The nameplate may be attached via a bracket welded to the exchanger, and shall be visible outside any insulation.

G-3.1.1 NAMEPLATE DATA

In addition to all data required by the Code, a nameplate shall also include the following (if provided):

User's equipment identification

User's order number

G-3.1.2 SUPPLEMENTAL INFORMATION

The manufacturer shall supply supplemental information where it is pertinent to the operation or testing of the exchanger. This would include information pertaining to differential design and test pressure conditions, restrictions on operating conditions for fixed tubesheet type exchangers, or other restrictive conditions applicable to the design and/or operation of the unit or its components. Such information can be noted on the nameplate or on a supplemental plate attached to the exchanger at the nameplate location.

G-3.2 PURCHASER'S NAMEPLATE

Purchaser's nameplates, when used, are to be supplied by the purchaser and supplement rather than replace the manufacturer's nameplate.

G-4 DRAWINGS AND ASME CODE DATA REPORTS

G-4.1 DRAWINGS FOR APPROVAL AND CHANGE

The manufacturer shall submit an outline drawing containing information necessary for the customer to locate piping to the exchanger and footings or structure necessary to support the exchanger. The outline shall be submitted for the customer's approval and shall show the following information as a minimum: nozzles sizes and locations, flange ratings for nozzles, overall dimensions, support locations and base plate dimensions, and exchanger weight. Other drawings may be furnished as agreed upon by the purchaser and the manufacturer. The drawing will be submitted electronically, in PDF format, unless another format is agreed upon by the purchaser and the manufacturer. It is anticipated that a reasonable number of minor changes may be required due to customer comments to this initial submittal. Any changes that cause additional expense are chargeable to the customer and it is the manufacturer's responsibility to advise the customer of the commercial impact. Purchaser's approval of drawings does not relieve the manufacturer of responsibility for compliance with this Standard and applicable Code requirements. The

manufacturer shall not make any changes on the approved drawings without express agreement of the purchaser.

G-4.2 DRAWINGS FOR RECORD

After approval of drawings, the manufacturer shall furnish drawings for record. The drawings will be submitted electronically, in PDF format, unless another format is agreed upon by the purchaser and the manufacturer.

G-4.3 PROPRIETARY RIGHTS TO DRAWINGS

The drawings and the design indicated by them are to be considered the property of the manufacturer and are not to be used or reproduced without his permission, except by the purchaser for his own internal use.

G-4.4 CODE DATA REPORTS

After completion of fabrication and inspection of an exchanger to its Code, the manufacturer shall furnish copies of the Code Manufacturer's Data Report or Certification, as agreed upon by the purchaser and the manufacturer.

G-5 GUARANTEES

G-5.1 GENERAL

The specific terms of the guarantees should be agreed upon by the manufacturer and purchaser. Unless otherwise agreed upon by the manufacturer and purchaser in writing, the following paragraphs in this section will be applicable and will govern even over the contrary terms of any other writing between the manufacturer and the purchaser unless that writing specifically states that it is intended to override the provisions of this section.

G-5.2 PERFORMANCE

The purchaser shall, in writing, furnish the manufacturer with all information needed for clear understanding of performance requirements, including any special requirements. The manufacturer shall guarantee thermal performance and mechanical design of a heat exchanger, when operated at the design conditions specified by the purchase order, or shown on the exchanger specification sheet furnished by the manufacturer (Figure G-5.2, G-5.2M). This guarantee shall extend for a period of twelve (12) months after shipping date. Notwithstanding this guarantee, the manufacturer shall have no responsibility or liability for excessive fouling of the apparatus by material such as coke, silt, scale, or any foreign substance that may be deposited, and the manufacturer shall have no responsibility or liability for any other performance problem wholly or partially caused by circumstances beyond the manufacturer's complete control or that the manufacturer did not have the ability to prevent. Without limiting the generality of the foregoing, such circumstances shall include (i) faulty installation of the exchanger by anyone other than the manufacturer, (ii) any modification or repair made to the exchanger by the purchaser or anyone other than the manufacturer and (iii) combination of the exchanger with other equipment not furnished by the manufacturer. The thermal guarantee shall not be applicable to exchangers where the thermal performance rating was made by anyone other than the manufacturer.

G-5.2.1 THERMAL PERFORMANCE TEST

A performance test shall be made if it is established after operation for a sufficient period of time that the performance of the exchanger does not meet the written performance requirements previously furnished by the purchaser to the manufacturer, provided the thermal performance rating was made by the manufacturer. Test conditions and procedures shall be selected by agreement between the purchaser and the manufacturer to permit extrapolation of the test results to the specified design conditions.

G-5.2.2 DEFECTIVE PARTS

The manufacturer shall repair or replace F.O.B. his plant any parts proven defective within the guarantee period, but does not assume liability for the cost of removing defective parts or reinstalling replacement parts. The manufacturer shall be responsible only for the direct costs associated with repair of its defect or non-conforming product. Finished materials and accessories purchased from other manufacturers, including tubes, are warranted only to the extent of the original manufacturer's warranty to the heat exchanger fabricator. The manufacturer will endeavor to provide the purchaser with a copy of any warranty

 ©Tubular Exchanger Manufacturers Association, Inc.

information given to the manufacturer by suppliers of parts incorporated into the exchanger by the manufacturer, but cannot be responsible for the accuracy or completeness of that information.

G-5.3 DAMAGES EXCLUSION

In no event shall the manufacturer be held liable for any indirect, special, incidental, punitive, exemplary or consequential damages, such as damages for loss of goodwill, work stoppage, lost profits, lost revenue, loss of clients, lost business or lost opportunity, or any other similar damages of any and every nature, under any theory of liability, whether in contract, tort, strict liability, or any other theory.

G-5.4 CORROSION AND VIBRATION

The manufacturer assumes no responsibility for deterioration of any part or parts of the equipment due to corrosion, erosion, flow induced tube vibration, or any other causes, regardless of when such deterioration occurs after leaving the manufacturer's premises, except as provided for in Paragraphs G-5.2 and G-5.2.2.

G-5.5 REPLACEMENT AND SPARE PARTS

When replacement or spare tube bundles, shells, or other parts are purchased, the manufacturer guarantees satisfactory fit of such parts only if he was the original manufacturer. Parts fabricated to drawings furnished by the purchaser shall be guaranteed to meet the dimensions and tolerances specified.

G-5.6 DISCLAIMER OF WARRANTY

While the manufacturer provides guarantees as specifically offered by the manufacturer to the purchaser in writing, the manufacturer makes no other warranties or guarantees and assumes no liability in connection with any other warranty or guarantee, express or implied. WITHOUT LIMITING THE GENERALITY OF THE FOREGOING, THE MANUFACTURER SPECIFICALLY DISCLAIMS ANY IMPLIED WARRANTY OF MERCHANTABILITY OR FITNESS FOR A PARTICULAR PURPOSE IN CONNECTION WITH THE SALE OF EXCHANGERS, WHETHER OR NOT THE MANUFACTURER HAS BEEN ADVISED OF SUCH PURPOSE.

G-5.7 AGGREGATE LIABILITY

The aggregate total liability of manufacturer to customer for any direct loss, cost, claim, or damages of any kind related to any failure of performance by a heat exchanger shall not exceed the amount the purchaser has paid to the manufacturer for the exchanger.

G-5.8 INDEMNIFICATION

Notwithstanding any other contract language to the contrary, the manufacturer shall have no liability to indemnify, defend or hold the purchaser harmless against third-party claims, costs, losses and expenses relating in any way to the transaction between the manufacturer and the purchaser or to heat exchanger performance.

G-6 PREPARATION OF HEAT EXCHANGERS FOR SHIPMENT

G-6.1 CLEANING

Internal and external surfaces are to be free from loose scale and other foreign material that is readily removable by hand or power brushing.

G-6.2 DRAINING

Water, oil, or other liquids used for cleaning or hydrostatic testing are to be drained from all units before shipment. This is not to imply that the units must be completely dry.

G-6.3 FLANGE PROTECTION

All exposed machined contact surfaces shall be coated with a removable rust preventative and protected against mechanical damage by suitable covers.

G-6.4 THREADED CONNECTION PROTECTION

All threaded connections are to be suitably plugged.

 ©Tubular Exchanger Manufacturers Association, Inc.

G-6.5 DAMAGE PROTECTION

The exchanger and any spare parts are to be suitably protected to prevent damage during shipment.

G-6.6 EXPANSION JOINT PROTECTION

External thin walled expansion bellows shall be equipped with a protective cover which does not restrain movement.

G-7 GENERAL CONSTRUCTION FEATURES OF TEMA STANDARD HEAT EXCHANGERS

G-7.1 SUPPORTS

All heat exchangers are to be provided with supports. The supports should be designed to accommodate the weight of the unit and contents, including the flooded weight during hydrostatic test.

For purposes of support design, forces from external nozzle loadings, wind and seismic events are assumed to be negligible unless the purchaser specifically details the requirements. When these additional loads and forces are required to be considered, they need not be assumed to occur simultaneously unless combinations are specifically defined.

The references under Paragraph G-7.1.3 may be used for calculating resulting stresses in the support structure and attachment. Acceptable methods for horizontal supports and vertical lugs are shown in the RGP section.

*G-7.1.1 HORIZONTAL UNITS

For units with removable tube bundles, supports should be designed to withstand a pulling force equal to 1-1/2 times the weight of the tube bundle.

Horizontal units are normally provided with at least two saddle type supports, with holes for anchor bolts. The holes in all but one of the supports are to be elongated to accommodate axial movement of the unit under operating conditions. Other types of support may be used if all design criteria are met, and axial movement is accommodated.

*G-7.1.2 VERTICAL UNITS

Vertical units are to be provided with supports adequate to meet design requirements. The supports may be of the lug, annular ring, leg or skirt type. If the unit is to be located in a supporting structure, the supports should be of sufficient size to allow clearance for the body flanges.

G-7.1.3 REFERENCES

(1) Zick, L. P., "Stresses in Large Horizontal Cylindrical Pressure Vessels on Two Saddle Supports," Pressure Vessel and Piping; Design and Analysis, ASME, 1972.

(2) Vinet, R., and Dore, R., "Stresses and Deformations in a Cylindrical Shell Lying on a Continuous Rigid Support," Paper No. 75-AM-1, Journal of Applied Mechanics, Trans. ASME.

(3) Krupka, V., "An Analysis for Lug or Saddle Supported Cylindrical Pressure Vessels," Proceedings of the First International Conference on Pressure Vessel Technology, pp. 491-500.

(4) Singh, K. P., Soler, A. I., "Mechanical Design of Heat Exchangers and Pressure Vessel Components," Chapter 17, Arcturus Publishers, Inc.

(5) Bijlaard, P. P., "Stresses from Local Loadings in Cylindrical Pressure Vessels," Trans. ASME, Vol. 77, No. 6, (August 1955).

(6) Wichman, K. R., Hopper, A. G., and Mershon, J. L., "Local Stresses in Spherical and Cylindrical Shells due to External Loadings," Welding Research Council, Bulletin No. 107, Rev. 1.

(7) Rodabaugh, E. C., Dodge, W. G., and Moore, S. E., "Stress Indices at Lug Supports on Piping Systems," Welding Research Council Bulletin No. 198.

(8) Brownell, L. E., and Young, E. H., "Process Equipment Design," John Wiley & Sons Inc.

 ©Tubular Exchanger Manufacturers Association, Inc.

(9) Jawad, M. H., and Farr, J. R., "Structural Analysis and Design of Process Equipment," John Wiley and Sons, Inc., 1984.
(10) Bednar, H. H., "Pressure Vessel Design Handbook," Van Nostrand Reinhold Company.
(11) Blodgett, O. W., "Design of Welded Structures," The James F. Lincoln Arc Welding Foundation, 1966.
(12) Moss, Dennis R., "Pressure Vessel Design Manual: Illustrated Procedures for Solving Major Pressure Vessel Design Problems" Edition: 3, Publisher: Gulf Pub Co (December 18, 2003).
(13) ASME Section VIII, Division 2, Part 4.15.3

*G-7.2 LIFTING DEVICES

Channels, bonnets, and covers which weigh over 60 lbs. (27.2 Kg) are to be provided with lifting lugs, rings or tapped holes for eyebolts. Unless otherwise specified, these lifting devices are designed to lift only the component to which they are directly attached.

Lugs for lifting the complete unit are not normally provided. When lifting lugs or trunnions are required by the purchaser to lift the complete unit, the device must be adequately designed.

(1) The purchaser shall inform the manufacturer about the way in which the lifting device will be used. The purchaser shall be notified of any limitations of the lifting device relating to design or method of rigging.
(2) Liquid penetrant examination of the lifting device attachment weld should be considered on large heavy units.
(3) The design load shall incorporate an appropriate impact factor.
(4) Plate-type lifting lugs should be oriented to minimize bending stresses.
(5) The hole diameter in the lifting device must be large enough to accept a shackle pin having a load rating greater than the design load.
(6) The effect on the unit component to which the lifting device is attached should be considered. It may be necessary to add a reinforcing plate, annular ring or pad to distribute the load.
(7) The adequacy of the exchanger to accommodate the lifting loads should be evaluated.

*G-7.3 WIND & SEISMIC DESIGN

For wind and seismic forces to be considered in the design of a heat exchanger, the purchaser must specify the design requirements in the inquiry. The "Recommended Good Practice" section of these Standards provides the designer with a discussion on this subject and selected references for design application.

 ©Tubular Exchanger Manufacturers Association, Inc.

E-1 PERFORMANCE OF HEAT EXCHANGERS

Satisfactory operation of heat exchangers can be obtained only from units which are properly designed and have built-in quality. Correct installation and preventive maintenance are user responsibilities.

E-1.1 PERFORMANCE FAILURES

The failure of heat exchanger equipment to perform satisfactorily may be caused by one or more factors, such as:
(1) Excessive fouling.
(2) Air or gas binding resulting from improper piping installation or lack of suitable vents.
(3) Operating conditions differing from design conditions.
(4) Maldistribution of flow in the unit.
(5) Excessive clearances between the baffles and shell and/or tubes, due to corrosion.
(6) Improper thermal design.
The user's best assurance of satisfactory performance lies in dependence upon manufacturers competent in the design and fabrication of heat transfer equipment.

E-2 INSTALLATION OF HEAT EXCHANGERS

E-2.1 HEAT EXCHANGER SETTINGS

E-2.1.1 CLEARANCE FOR DISMANTLING

For straight tube exchangers fitted with removable bundles, provide sufficient clearance at the stationary head end to permit removal of the bundle from the shell and provide adequate space beyond the rear head to permit removal of the shell cover and/or floating head cover.

For fixed tubesheet exchangers, provide sufficient clearance at one end to permit withdrawal and replacement of the tubes, and enough space beyond the head at the opposite end to permit removal of the bonnet or channel cover.

For U-tube heat exchangers, provide sufficient clearance at the stationary head end to permit withdrawal of the tube bundle, or at the opposite end to permit removal of the shell.

E-2.1.2 FOUNDATIONS

Foundations must be adequate so that exchangers will not settle and impose excessive strains on the exchanger. Foundation bolts should be set to allow for setting inaccuracies. In concrete footings, pipe sleeves at least one size larger than bolt diameter slipped over the bolt and cast in place are best for this purpose, as they allow the bolt center to be adjusted after the foundation has set.

E-2.1.3 FOUNDATION BOLTS

Foundation bolts should be loosened at one end of the unit to allow free expansion of shells. Slotted holes in supports are provided for this purpose.

E-2.1.4 LEVELING

Exchangers must be set level and square so that pipe connections may be made without forcing.

E-2.2 CLEANLINESS PROVISIONS

E-2.2.1 CONNECTION PROTECTORS

All exchanger openings should be inspected for foreign material. Protective plugs and covers should not be removed until just prior to installation.

E-2.2.2 DIRT REMOVAL

The entire system should be clean before starting operation. Under some conditions, the use of strainers in the piping may be required.

E-2.2.3 CLEANING FACILITIES

Convenient means should be provided for cleaning the unit as suggested under "Maintenance of Heat Exchangers," Paragraph E-4.

 ©Tubular Exchanger Manufacturers Association, Inc.

E-2.3 FITTINGS AND PIPING

E-2.3.1 BY-PASS VALVES

It may be desirable for purchaser to provide valves and by-passes in the piping system to permit inspection and repairs.

E-2.3.2 TEST CONNECTIONS

When not integral with the exchanger nozzles, thermometer well and pressure gage connections should be installed close to the exchanger in the inlet and outlet piping.

E-2.3.3 VENTS

Vent valves should be provided by purchaser so units can be purged to prevent vapor or gas binding. Special consideration must be given to discharge of hazardous or toxic fluids.

E-2.3.4 DRAINS

Drains may discharge to atmosphere, if permissible, or into a vessel at lower pressure. They should not be piped to a common closed manifold.

E-2.3.5 PULSATION AND VIBRATION

In all installations, care should be taken to eliminate or minimize transmission of fluid pulsations and mechanical vibrations to the heat exchangers.

E-2.3.6 SAFETY RELIEF DEVICES

When specified by the purchaser, the manufacturer will provide the necessary connections for the safety relief devices. The size and type of the required connections will be specified by the purchaser. The purchaser will provide and install the required relief devices.

E-3 OPERATION OF HEAT EXCHANGERS

E-3.1 DESIGN AND OPERATING CONDITIONS

Equipment must not be operated at conditions which exceed those specified on the nameplate(s).

E-3.2 OPERATING PROCEDURES

Before placing any exchanger in operation, reference should be made to the exchanger drawings, specification sheet(s) and nameplate(s) for any special instructions. Local safety and health regulations must be considered. Improper start-up or shut-down sequences, particularly of fixed tubesheet units, may cause leaking of tube-to-tubesheet and/or bolted flanged joints.

E-3.2.1 START-UP OPERATION

Most exchangers with removable tube bundles may be placed in service by first establishing circulation of the cold medium, followed by the gradual introduction of the hot medium. During start-up all vent valves should be opened and left open until all passages have been purged of air and are completely filled with fluid. For fixed tubesheet exchangers, fluids must be introduced in a manner to minimize differential expansion between the shell and tubes.

E-3.2.2 SHUT-DOWN OPERATION

For exchangers with removable bundles, the units may be shut down by first gradually stopping the flow of the hot medium and then stopping the flow of the cold medium. If it is necessary to stop the flow of cold medium, the circulation of hot medium through the exchanger should also be stopped. For fixed tubesheet exchangers, the unit must be shut down in a manner to minimize differential expansion between shell and tubes. When shutting down the system, all units should be drained completely when there is the possibility of freezing or corrosion damage. To guard against water hammer, condensate should be drained from steam heaters and similar apparatus during start-up or shut-down. To reduce water retention after drainage, the tube side of water cooled exchangers should be blown out with air.

E-3.2.3 TEMPERATURE SHOCKS

Exchangers normally should not be subjected to abrupt temperature fluctuations. Hot fluid must not be suddenly introduced when the unit is cold, nor cold fluid suddenly introduced when the unit is hot.

 ©Tubular Exchanger Manufacturers Association, Inc.

E-3.2.4 BOLTED JOINTS

Heat exchangers are pressure tested before leaving the manufacturer's shop in accordance with Code requirements. However, normal relaxing of the gasketed joints may occur in the interval between testing in the manufacturer's shop and installation at the jobsite. Therefore, all external bolted joints may require retightening after installation and, if necessary, after the exchanger has reached operating temperature.

E-3.2.4.1 It is possible for the bolt stress to decrease after initial tightening, because of slow creep or relaxation of the gasket, particularly in the case of the softer gasket materials.

E-3.2.4.2 Excessive initial bolt stress can cause yielding of the bolt itself. This is especially likely with bolts of small diameter or bolting having relatively low yield values such as stainless steels.

E-3.2.4.3 ASME PCC-1 Appendices N and P provide additional guidance for the reuse of bolts and for troubleshooting flanged joint leakage incidents.

E-3.2.4.4 Selection of the appropriate bolt stress and/or torque shall be done so as to provide sufficient preload to seat the gasket within the capacity of the flange. Acceptable methods for this selection include, but are not limited to, past experience, recommendations from gasket manufacturers, considerations from ASME Code Appendix S, using guidelines from ASME PCC-1 Section 10 and Appendix O, or using WRC Bulletin 538. When using the Joint Component Approach as shown in ASME PCC-1 O-4 or WRC-538, it is recommended that this approach be performed during the flange design as this approach may increase flange thickness. Gasket seating stress values for use in ASME PCC-1 O-4 can be found from gasket manufacturers and PVP papers PVP2013-97900 for service sheet/non-asbestos gaskets and PVP2014-28434 for GMGC, CMGC, and Spiral wound gaskets. Acceptable methods for converting bolt stress to target torque include, but are not limited to, ASME PCC-1 Section 12 and Appendices J and K.

E-3.2.5 RECOMMENDED BOLT TIGHTENING PROCEDURE

E-3.2.5.1 All gasket joint surfaces shall be clean and free of oil or debris. If the gasket requires assistance to be held in place for installation, grease shall not be used. Any tape applied to a spiral wound gasket for shipping or assembly shall be removed prior to installing the gasket. No tape, string or other object will be allowed to remain on the gasket surface once assembly is complete. ASME PCC-1 Section 6 provides additional guidance for the installation of gaskets.

E-3.2.5.2 Thoroughly clean threads, nut faces and the flange where nut face bears. If roughness, burrs or any irregularity is present, dress it out to as smooth a surface as possible.

E-3.2.5.3 Thoroughly lubricate threads on studs, nuts and contacting surfaces on nuts and flange. ASME PCC-1 Section 7 provides additional guidance for the lubrication of fasteners.

E-3.2.5.4 The joint shall be snugged up squarely so the entire flange face bears uniformly on the gasket. ASME PCC-1 Section 5 and Appendix E provide additional guidance for the alignment of joints.

E-3.2.5.5 Tightening of the bolts shall be applied in at least three equally spaced increments using a cross bolting pattern as illustrated in Figure E-3.2.5.5 or a pattern as recommended by ASME PCC-1 Sections 8 through 11.

E-3.2.5.6 When the cross bolting pattern is used and is complete; a circular chase pattern shall be applied until no nut rotation occurs.

 ©Tubular Exchanger Manufacturers Association, Inc.

FIGURE E-3.2.5.5

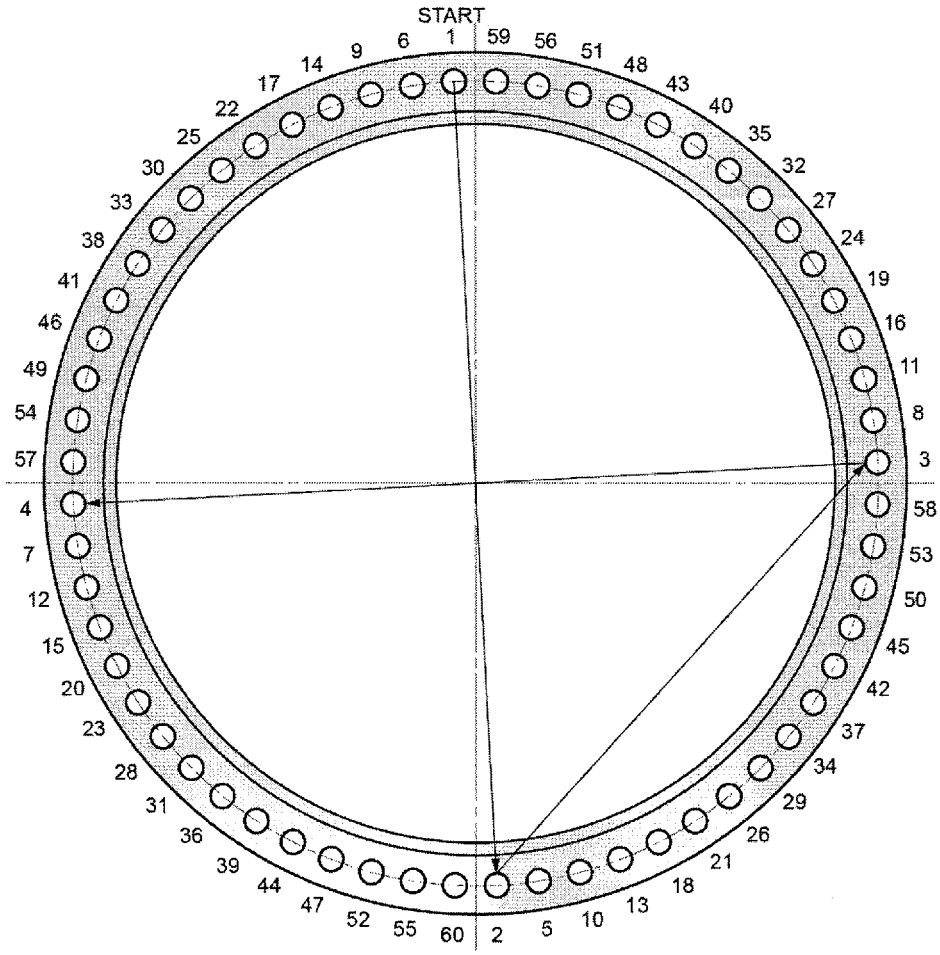

E-4 MAINTENANCE OF HEAT EXCHANGERS

E-4.1 INSPECTION OF UNIT

At regular intervals and as frequently as experience indicates, an examination should be made of the interior and exterior condition of the unit. Neglect in keeping all tubes clean may result in complete stoppage of flow through some tubes which could cause severe thermal strains, leaking tube joints, or structural damage to other components. Sacrificial anodes, when provided, should be inspected to determine whether they should be cleaned or replaced.

E-4.1.1 INDICATIONS OF FOULING

Exchangers subject to fouling or scaling should be cleaned periodically. A light sludge or scale coating on the tube greatly reduces its efficiency. A marked increase in pressure drop and/or reduction in performance usually indicates cleaning is necessary. The unit should first be checked for air or vapor binding to confirm that this is not the cause for the reduction in performance. Since the difficulty of cleaning increases rapidly as the scale thickness or deposit increases, the intervals between cleanings should not be excessive.

 ©Tubular Exchanger Manufacturers Association, Inc.

E-4.1.2 DISASSEMBLY FOR INSPECTION OR CLEANING

Before disassembly, the user must assure himself that the unit has been depressurized, vented and drained, neutralized and/or purged of hazardous material.

To inspect the inside of the tubes and also make them accessible for cleaning, the following procedures should be used:

(1) Front End Stationary Head
  (a) Type A, C, D & N, remove cover only
  (b) Type B, remove bonnet

(2) Rear End Head
  (a) Type L, N & P, remove cover only
  (b) Type M, remove bonnet
  (c) Type S & T, remove shell cover and floating head cover
  (d) Type W, remove channel cover or bonnet

E-4.1.3 LOCATING TUBE LEAKS

The following procedures may be used to locate perforated or split tubes and leaking joints between tubes and tubesheets. In most cases, the entire front face of each tubesheet will be accessible for inspection. The point where water escapes indicates a defective tube or tube-to-tubesheet joint.

(1) Units with removable channel cover: Remove channel cover and apply hydraulic pressure in the shell.

(2) Units with bonnet type head: For fixed tubesheet units where tubesheets are an integral part of the shell, remove bonnet and apply hydraulic pressure in the shell. For fixed tubesheet units where tubesheets are not an integral part of the shell and for units with removable bundles, remove bonnet, re-bolt tubesheet to shell or install test flange or gland, whichever is applicable, and apply hydraulic pressure in the shell. See Figure E-4.1.3-1 for examples of some typical test flanges and test glands.

FIGURE E-4.1.3-1

(3) Units with Type S or T floating head: Remove channel cover or bonnet, shell cover and floating head cover. Install test ring and bolt in place with gasket and packing. Apply hydraulic pressure in the shell. A typical test ring is shown in Figure E-4.1.3-2. When a test ring is not available it is possible to locate leaks in the floating head end by removing the shell cover and applying hydraulic pressure in the tubes. Leaking tube joints may then be located by sighting through the tube lanes. Care must be exercised when testing partially assembled exchangers to prevent over extension of expansion joints or overloading of tubes and/or tube-to-tubesheet joints.

(4) Hydrostatic test should be performed so that the temperature of the metal is over 60°F (16°C) or as permitted by the applicable code.

 ©Tubular Exchanger Manufacturers Association, Inc.

FIGURE E-4.1.3-2

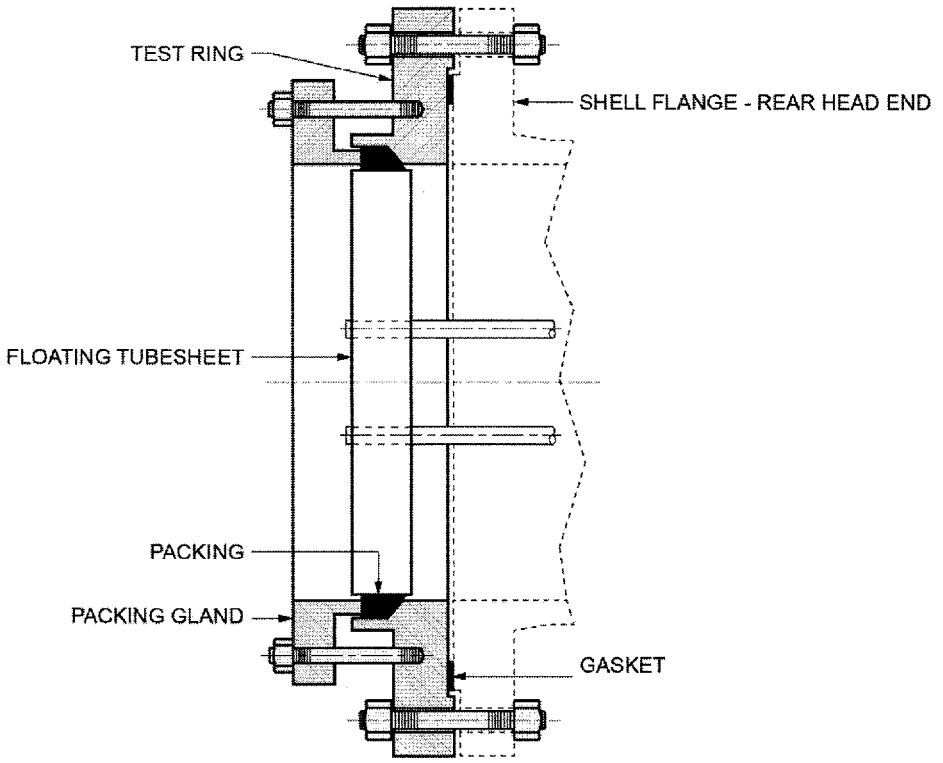

E-4.2 TUBE BUNDLE REMOVAL AND HANDLING

To avoid possible damage during removal of a tube bundle from a shell, a pulling device should be attached to eyebolts screwed into the tubesheet. If the tubesheet does not have tapped holes for eyebolts, steel rods or cables inserted through tubes and attached to bearing plates may be used. The bundle should be supported on the tube baffles, supports or tubesheets to prevent damage to the tubes.

Gasket and packing contact surfaces should be protected.

E-4.3 CLEANING TUBE BUNDLES

E-4.3.1 CLEANING METHODS

The heat transfer surfaces of heat exchangers should be kept reasonably clean to assure satisfactory performance. Convenient means for cleaning should be made available.

Heat exchangers may be cleaned by either chemical or mechanical methods. The method selected must be the choice of the operator of the plant and will depend on the type of deposit and the facilities available in the plant. Following are several cleaning procedures that may be considered:

(1) Circulating hot wash oil or light distillate through tubes or shell at high velocity may effectively remove sludge or similar soft deposits.

(2) Some salt deposits may be washed out by circulating hot fresh water.

(3) Commercial cleaning compounds are available for removing sludge or scale provided hot wash oil or water is not available or does not give satisfactory results.

(4) High pressure water jet cleaning.

(5) Scrapers, rotating wire brushes, and other mechanical means for removing hard scale, coke, or other deposits.

(6) Employ services of a qualified organization that provides cleaning services. These organizations will check the nature of the deposits to be removed, furnish proper solvents and/or acid solutions containing inhibitors, and provide equipment and personnel for a complete cleaning job.

 ©Tubular Exchanger Manufacturers Association, Inc.

E-4.3.2 CLEANING PRECAUTIONS

(1) Tubes should not be cleaned by blowing steam through individual tubes since this heats the tube and may result in severe expansion strain, deformation of the tube, or loosening of the tube-to-tubesheet joint.

(2) When mechanically cleaning a tube bundle, care should be exercised to avoid damaging the tubes.

(3) Cleaning compounds must be compatible with the metallurgy of the exchanger.

E-4.4 TUBE EXPANDING

A suitable tube expander should be used to tighten a leaking tube joint. Care should be taken to ensure that tubes are not over expanded.

E-4.5 GASKET REPLACEMENT

Gaskets and gasket surfaces should be thoroughly cleaned and should be free of scratches and other defects. Gaskets should be properly positioned before attempting to retighten bolts. It is recommended that when a heat exchanger is dismantled for any cause, it be reassembled with new gaskets. This will tend to prevent future leaks and/or damage to the gasket seating surfaces of the heat exchanger. Composition gaskets become dried out and brittle so that they do not always provide an effective seal when reused. Metal or metal jacketed gaskets, when compressed initially, flow to match their contact surfaces. In so doing they are work hardened and, if reused, may provide an imperfect seal or result in deformation and damage to the gasket contact surfaces of the exchanger.

Bolted joints and flanges are designed for use with the particular type of gasket specified. Substitution of a gasket of different construction or improper dimensions may result in leakage and damage to gasket surfaces. Therefore, any gasket substitutions should be of compatible design. Any leakage at a gasketed joint should be rectified and not permitted to persist as it may result in damage to the gasket surfaces.

Metal jacketed type gaskets are widely used. When these are used with a tongue and groove joint without a nubbin, the gasket should be installed so that the tongue bears on the seamless side of the gasket jacket. When a nubbin is used, the nubbin should bear on the seamless side.

E-4.6 DIAPHRAGM INSTALLATION PROCEDURE

(1) Position diaphragm and tighten to remove all voids between diaphragm and component to which it will be welded. This may be accomplished by bolting the cover in place, by a series of clamps or any other means that guarantees that the diaphragm will not move during final bolt-up and crack the weld.

(2) Make the diaphragm to component weld and liquid penetrant inspect.

(3) Install cover and tighten studs to required torque or tension.

(4) Liquid penetrant inspect weld again after tightening studs.

E-4.7 SPARE AND REPLACEMENT PARTS

The procurement of spare or replacement parts from the manufacturer will be facilitated if the correct name for the part, as shown in Section 1, Table N-2, of these Standards is given, together with the serial number, type, size, and other information from the nameplate. Replacement parts should be purchased from the original manufacturer.

E-4.8 PLUGGING OF TUBES

In U-tube heat exchangers, and other exchangers of special design, it may not be feasible to remove and replace defective tubes. Defective tubes may be plugged using commercially available tapered plugs with ferrules or tapered only plugs which may or may not be seal welded. Excessive tube plugging may result in reduced thermal performance, higher pressure drop, and/or mechanical damage. It is the user's responsibility to remove plugs and neutralize the bundle prior to sending it to a shop for repairs.

 ©Tubular Exchanger Manufacturers Association, Inc.

E-5 CHANGES TO CONFIGURATION OF HEAT EXCHANGERS

It may be desirable to change the configuration of the heat exchanger, upgrade materials, increase the design pressures and/or temperatures, or change the gasket types when replacing or reworking components of an existing heat exchanger. Reasons for these changes may range from a need to increase performance, to take advantage of new alloys, to support changes in other parts of the plant, to solve chronic problems in the heat exchanger itself or for economic considerations. Whenever changes are made to components of the heat exchanger, consideration should be given to the effect on the overall design of the heat exchanger. It is always advisable to consult the rules of the jurisdiction where the equipment is installed prior to making any changes. The requirements of the Code and TEMA shall also be satisfied. Some particular areas of concern are flange rating, material thickness, unsupported tube length, channel nozzle locations, pass partition configuration, and clearance between the end of the removable bundle and the shell.

 ©Tubular Exchanger Manufacturers Association, Inc.

RCB-1 SCOPE AND GENERAL REQUIREMENTS

RCB-1.1 SCOPE OF STANDARDS

RCB-1.1.1 GENERAL

The TEMA Mechanical Standards are applicable to shell and tube heat exchangers which do not exceed any of the following criteria:

(1) inside diameters of 100 in. (2540 mm)

(2) product of nominal diameter, in. (mm) and design pressure, psi (kPa) of 100,000 (17.5×10^6)

(3) a design pressure of 3,000 psi (20684 kPa)

The intent of these parameters is to limit the maximum shell wall thickness to approximately 3 in. (76 mm), and the maximum stud diameter to approximately 4 in. (102 mm). Criteria contained in these Standards may be applied to units which exceed the above parameters.

R-1.1.2 DEFINITION OF TEMA CLASS "R" EXCHANGERS

The TEMA Mechanical Standards for Class "R" heat exchangers specify design and fabrication of unfired shell and tube heat exchangers for the generally severe requirements of petroleum and related processing applications.

C-1.1.2 DEFINITION OF TEMA CLASS "C" EXCHANGERS

The TEMA Mechanical Standards for Class "C" heat exchangers specify design and fabrication of unfired shell and tube heat exchangers for the generally moderate requirements of commercial and general process applications.

B-1.1.2 DEFINITION OF TEMA CLASS "B" EXCHANGERS

The TEMA Mechanical Standards for Class "B" heat exchangers specify design and fabrication of unfired shell and tube heat exchangers for chemical process service.

RCB-1.1.3 CONSTRUCTION CODES

Unless otherwise specified, the individual vessels shall comply with the American Society of Mechanical Engineers (ASME) Boiler and Pressure Vessel Code, Section VIII, Division 1. The chosen construction code is hereinafter referred to as the Code. Where references to specific sections of ASME Section VIII, Division 1 are made, these are hereinafter referred to as the ASME Code.

RCB-1.1.4 MATERIALS - DEFINITION OF TERMS

For purposes of these Standards, "carbon steel" shall be construed as any steel or low alloy falling within the scope of Part UCS of the ASME Code. Metals not included by the foregoing (except cast iron) shall be considered as "alloys" unless otherwise specifically named. Materials of construction, including gaskets, should be specified by the purchaser. The manufacturer assumes no responsibility for deterioration of parts for any reason.

RCB-1.2 DESIGN PRESSURES

Design pressures for the shell and tube sides shall be specified separately by the purchaser.

RCB-1.3 TESTING

RCB-1.3.1 STANDARD TEST

The exchanger shall be hydrostatically tested with water. The test pressure shall be held for at least 30 minutes. The shell side and the tube side are to be tested separately in such a manner that leaks at the tube joints can be detected from at least one side. Welded joints are to be sufficiently cleaned prior to testing the exchanger to permit proper inspection during the test. The minimum hydrostatic test pressure and temperature shall be in accordance with the Code.

Liquids other than water may be used as a testing medium if agreed upon between the purchaser and the manufacturer.

 ©Tubular Exchanger Manufacturers Association, Inc.

RCB-1.3.2 PNEUMATIC TEST

When liquid cannot be tolerated as a test medium the exchanger may be given a pneumatic test in accordance with the Code. It must be recognized that air or gas is hazardous when used as a pressure testing medium. The pneumatic test pressure and temperature shall be in accordance with the Code.

RCB-1.3.3 SUPPLEMENTARY AIR TEST

When a supplementary air or gas test is specified by the purchaser, it shall be preceded by the hydrostatic test required by Paragraph RCB-1.3.1. The test pressure and temperature shall be as agreed upon by the purchaser and manufacturer, but shall not exceed that required by Paragraph RCB-1.3.2.

RCB-1.4 METAL TEMPERATURES

RCB-1.4.1 METAL TEMPERATURE LIMITATIONS FOR PRESSURE PARTS

The metal temperature limitations for various metals are those prescribed by the Code.

RCB-1.4.2 DESIGN TEMPERATURE OF HEAT EXCHANGER PARTS

RCB-1.4.2.1 FOR PARTS NOT IN CONTACT WITH BOTH FLUIDS

Design temperatures for the shell and tube sides shall be specified separately by the purchaser. The Code provides the allowable stress limits for parts to be designed at the specified design temperature.

RCB-1.4.2.2 FOR PARTS IN CONTACT WITH BOTH FLUIDS

The design temperature is the design metal temperature and is used to establish the Code stress limits for design. The design metal temperature shall be based on the operating temperatures of the shell side and the tube side fluids, except when the purchaser specifies some other design metal temperature. When the design metal temperature is less than the higher of the design temperatures referred to in Paragraph RCB-1.4.2.1, the design metal temperature and the affected parts shall be shown on the manufacturer's nameplate(s) as described in Paragraph G-3.1.

RCB-1.4.2.3 MINIMUM DESIGN METAL TEMPERATURE

The minimum design metal temperature shall be specified by the purchaser. Consideration should be given to operating temperatures, low ambient temperatures, and upset conditions such as auto refrigeration when specifying the minimum design metal temperatures. Minimum design metal temperatures shall be used to evaluate if impact testing is required for the various heat exchanger components.

RCB-1.4.3 MEAN METAL TEMPERATURES

RCB-1.4.3.1 FOR PARTS NOT IN CONTACT WITH BOTH FLUIDS

The mean metal temperature is the calculated metal temperature, under normal operating conditions, of a part in contact with a fluid. It is used to establish metal properties under operating conditions. The mean metal temperature is based on the specified operating temperatures of the fluid in contact with the part.

RCB-1.4.3.2 FOR PARTS IN CONTACT WITH BOTH FLUIDS

The mean metal temperature is the calculated metal temperature, under normal operating conditions, of a part in contact with both shell side and tube side fluids. It is used to establish metal properties under operating conditions. The mean metal temperature is based on the specified operating temperatures of the shell side and tube side fluids. In establishing the mean metal temperatures, due consideration shall be given to such factors as the relative heat transfer coefficients of the two fluids contacting the part and the relative heat transfer area of the parts contacted by the two fluids.

 ©Tubular Exchanger Manufacturers Association, Inc.

RCB-1.5 STANDARD CORROSION ALLOWANCES

The standard corrosion allowances used for the various heat exchanger parts are as follows, unless the conditions of service make a different allowance more suitable and such allowance is specified by the purchaser.

RCB-1.5.1 CARBON STEEL PARTS

R-1.5.1.1 PRESSURE PARTS

All carbon steel pressure parts, except as noted below, are to have a corrosion allowance of 1/8" (3.2 mm).

CB-1.5.1.1 PRESSURE PARTS

All carbon steel pressure parts, except as noted below, are to have a corrosion allowance of 1/16" (1.6 mm).

RCB-1.5.1.2 INTERNAL FLOATING HEAD COVERS

Internal floating head covers are to have the corrosion allowance on all wetted surfaces except gasket seating surfaces. Corrosion allowance need not be added to the recommended minimum edge distance in Table D-5 or D-5M.

RCB-1.5.1.3 TUBESHEETS

Tubesheets are to have the corrosion allowance on each side with the provision that, on the grooved side of a grooved tubesheet, the depth of the gasketed groove may be considered as available for corrosion allowance.

RCB-1.5.1.4 EXTERNAL COVERS

Where flat external covers are grooved, the depth of the gasketed groove may be considered as available for corrosion allowance.

RCB-1.5.1.5 END FLANGES

Corrosion allowance shall be applied only to the inside diameter of flanges where exposed to the fluids.

RCB-1.5.1.6 NONPRESSURE PARTS

Nonpressure parts such as tie-rods, spacers, baffles and support plates are not required to have corrosion allowance.

RCB-1.5.1.7 TUBES, BOLTING AND FLOATING HEAD BACKING DEVICES

Tubes, bolting and floating head backing devices are not required to have corrosion allowance.

RCB-1.5.1.8 PASS PARTITION PLATES AND WELDED-IN LONG BAFFLES

Pass partition plates and welded-in long baffles are not required to have corrosion allowance.

RCB-1.5.2 ALLOY PARTS

Alloy parts are not required to have corrosion allowance.

R-1.5.3 CAST IRON PARTS

Cast iron pressure parts shall have a corrosion allowance of 1/8" (3.2 mm).

CB-1.5.3 CAST IRON PARTS

Cast iron pressure parts shall have a corrosion allowance of 1/16" (1.6 mm).

RCB-1.6 SERVICE LIMITATIONS

RB-1.6.1 CAST IRON PARTS

Cast iron shall be used only for water service at pressures not exceeding 150 psi (1034 kPa).

 ©Tubular Exchanger Manufacturers Association, Inc.

C-1.6.1 CAST IRON PARTS

Cast iron shall not be used for pressures exceeding 150 psi (1034 kPa), or for lethal or flammable fluids at any pressure.

RCB-1.6.2 EXTERNAL PACKED JOINTS

Packed joints shall not be used when the purchaser specifies that the fluid in contact with the joint is lethal or flammable.

RCB-1.7 ANODES

Selection and placement of anodes is not the responsibility of the heat exchanger manufacturer. If a heat exchanger is to be furnished with anodes, when requesting a quotation, the purchaser is responsible for furnishing the heat exchanger manufacturer the following information:

(1) Method of anode attachment.

(2) Quantity of anodes required.

(3) Size and manufacturer of the anodes.

(4) Anode material.

(5) Sketch of anode locations and spacing.

If the heat exchanger manufacturer chooses to install anodes for a customer, the manufacturer is not responsible for the suitability of the anodes for the service it is installed in, the life of the anodes, the corrosion protection provided by the anode, or any subsequent damage to the heat exchanger attributed to the anode, the method of anode installation, or the installed location of the anode in the heat exchanger.

 ©Tubular Exchanger Manufacturers Association, Inc.

*RCB-2 TUBES

RCB-2.1 TUBE LENGTH

The following tube lengths for both straight and U-tube exchangers are commonly used: 96 (2438), 120 (3048), 144 (3658), 192 (4877) and 240 (6096) in. (mm). Other lengths may be used. Also see Paragraph N-1.1.2.

RCB-2.2 TUBE DIAMETERS AND GAGES

RCB-2.2.1 BARE TUBES

Table RCB-2.2.1 lists common tube diameters and gages for bare tubes of copper, steel and alloy. Other diameters and gages are acceptable.

TABLE RCB-2.2.1

BARE TUBE DIAMETERS AND GAGES			
O.D. in. (mm)	Copper and Copper Alloys	Carbon Steel, Aluminum and Aluminum Alloys	Other Alloys
	B.W.G.	B.W.G.	B.W.G.
1/4 (6.4)	27 24 22	- - -	27 24 22
3/8 (9.5)	22 20 18	- - -	22 20 18
1/2 (12.7)	20 18	- -	20 18
5/8 (15.9)	20 18 16	18 16 14	20 18 16
3/4 (19.1)	20 18 16	16 14 12	18 16 14
7/8 (22.2)	18 16 14 12	14 12 10 -	16 14 12 -
1 (25.4)	18 16 14	14 12 -	16 14 12
1 1/4 (31.8)	16 14	14 12	14 12
1 1/2 (38.1)	16 14	14 12	14 12
2 (50.8)	14 12	14 12	14 12

Notes:

1. Wall thickness shall be specified as either minimum or average.
2. Characteristics of tubing are shown in Tables D-7 and D-7M.

RCB-2.2.2 INTEGRALLY FINNED TUBES

The nominal fin diameter shall not exceed the outside diameter of the unfinned section. Tubes shall be specified as both thickness under fin and at plain end.

 ©Tubular Exchanger Manufacturers Association, Inc.

RCB-2.3 U-TUBES

RCB-2.3.1 U-BEND REQUIREMENTS

When U-bends are formed, it is normal for the tube wall at the outer radius to thin. Unless the minimum tube wall thickness in the bend can be otherwise guaranteed, the required tube wall thickness in the bent portion before bending shall be verified by the following formula:

$$t_o = t_1\left[1 + \frac{d_o}{CR}\right]$$

where

t_0 = Required tube wall thickness prior to bending, in. (mm)

t_1 = Minimum tube wall thickness calculated by Code rules for a straight tube subjected to the same pressure and metal temperature, in. (mm)

d_0 = Outside tube diameter, in. (mm)

C = Thinning constant:

= 4, typical for the following materials: carbon steel, low alloy, ferritic stainless, austenitic stainless, other relatively non-work-hardening materials, and copper alloys.

= 2, typical for the following materials: martensitic stainless, duplex stainless, super austenitic stainless, titanium, high nickel alloys, and other work-hardening materials.

Note: different constants may be used based upon other considerations of tube thinning and previous experience.

R = Mean radius of bend, in. (mm)

More than one tube gage, or dual gage tubes, may be used in a tube bundle.

Flattening at the bend shall not exceed 10% of the nominal tube outside diameter.

For tube bends with $R < 2d_0$, flattening may exceed 10% when the material is highly susceptible to work hardening or when the straight tube thickness is $< d_0/12$. Special consideration, based upon bending experience, may be required.

Special consideration may also be required for materials having low ductility.

RCB-2.3.2 BEND SPACING

RCB-2.3.2.1 CENTER-TO-CENTER DIMENSION

The center-to-center dimensions between parallel legs of U-tubes shall be such that they can be inserted into the baffle assembly without damage to the tubes.

RCB-2.3.2.2 BEND INTERFERENCE

The assembly of bends shall be of workmanlike appearance. Metal-to-metal contact between bends in the same plane shall not be permitted.

RCB-2.3.3 HEAT TREATMENT

Cold work in forming U-bends may induce embrittlement or susceptibility to stress corrosion in certain materials and/or environments. Heat treatment to alleviate such conditions may be performed by agreement between manufacturer and purchaser.

 ©Tubular Exchanger Manufacturers Association, Inc.

RCB-2.4 TUBE PATTERN

Standard tube patterns are shown in Figure RCB-2.4.

FIGURE RCB-2.4

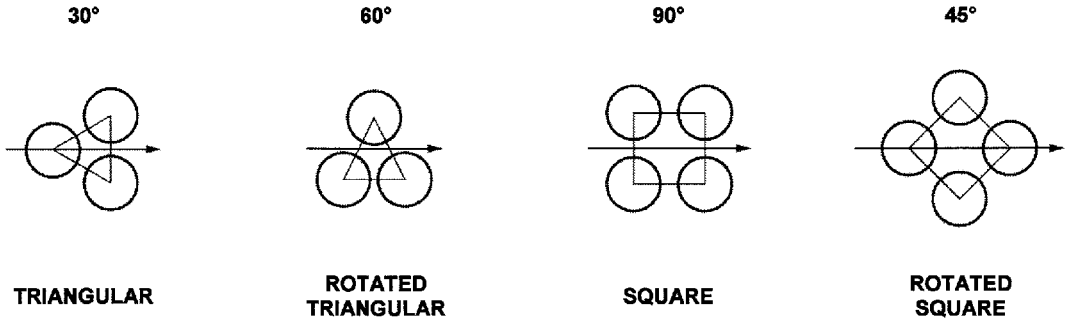

Note: Flow arrows are perpendicular to the baffle cut edge.

RCB-2.4.1 SQUARE PATTERN

In removable bundle units, when mechanical cleaning of the tubes is specified by the purchaser, tube lanes should be continuous.

RCB-2.4.2 TRIANGULAR PATTERN

Triangular or rotated triangular pattern should not be used when the shell side is to be cleaned mechanically.

R-2.5 TUBE PITCH

Tubes shall be spaced with a minimum center-to-center distance of 1.25 times the outside diameter of the tube. When mechanical cleaning of the tubes is specified by the purchaser, minimum cleaning lanes of 1/4" (6.4 mm) shall be provided.

C-2.5 TUBE PITCH

Tubes shall be spaced with a minimum center-to-center distance of 1.25 times the outside diameter of the tube. Where the tube diameters are 5/8" (15.9 mm) or less and tube-to-tubesheet joints are expanded only, the minimum center-to-center distance may be reduced to 1.20 times the outside diameter.

B-2.5 TUBE PITCH

Tubes shall be spaced with a minimum center-to-center distance of 1.25 times the outside diameter of the tube. When mechanical cleaning of the tubes is specified by the purchaser and the nominal shell diameter is 12 in. (305 mm) or less, minimum cleaning lanes of 3/16" (4.8 mm) shall be provided. For shell diameters greater than 12 in. (305 mm), minimum cleaning lanes of 1/4" (6.4 mm) shall be provided.

 ©Tubular Exchanger Manufacturers Association, Inc.

This page intentionally blank

©Tubular Exchanger Manufacturers Association, Inc.

RCB-3 SHELLS AND SHELL COVERS

RCB-3.1 SHELLS

RCB-3.1.1 SHELL DIAMETERS

It shall be left to the discretion of each manufacturer to establish a system of standard shell diameters within the TEMA Mechanical Standards in order to achieve the economies peculiar to its individual design and manufacturing facilities.

RCB-3.1.2 TOLERANCES

RCB-3.1.2.1 PIPE SHELLS

The inside diameter of pipe shells shall be in accordance with applicable ASTM/ASME pipe specifications.

RCB-3.1.2.2 PLATE SHELLS

The inside diameter of any plate shell shall not exceed the design inside diameter by more than 1/8" (3.2 mm) as determined by circumferential measurement.

RCB-3.1.3 MINIMUM SHELL THICKNESS

Shell thickness is determined by the Code design formulas, plus corrosion allowance, but in no case shall the nominal thickness of shells be less than that shown in the applicable table. The nominal total thickness for clad shells shall be the same as for carbon steel shells.

TABLE R-3.1.3
MINIMUM SHELL THICKNESS
Dimensions in Inches (mm)

Nominal Shell Diameter		Minimum Thickness				
		Carbon Steel			Alloy *	
		Pipe	Plate			
6	(152)	SCH. 40	-		1/8	(3.2)
8-12	(203-305)	SCH. 30	-		1/8	(3.2)
13-29	(330-737)	SCH. STD	3/8	(9.5)	3/16	(4.8)
30-39	(762-991)	-	7/16	(11.1)	1/4	(6.4)
40-60	(1016-1524)	-	1/2	(12.7)	5/16	(7.9)
61-80	(1549-2032)	-	1/2	(12.7)	5/16	(7.9)
81-100	(2057-2540)	-	1/2	(12.7)	3/8	(9.5)

TABLE CB-3.1.3
MINIMUM SHELL THICKNESS
Dimensions in Inches (mm)

Nominal Shell Diameter		Minimum Thickness				
		Carbon Steel			Alloy *	
		Pipe	Plate			
6	(152)	SCH. 40	-		1/8	(3.2)
8-12	(203-205)	SCH. 30	-		1/8	(3.2)
13-23	(330-584)	SCH. 20	5/16	(7.9)	1/8	(3.2)
24-29	(610-737)	-	5/16	(7.9)	3/16	(4.8)
30-39	(762-991)	-	3/8	(9.5)	1/4	(6.4)
40-60	(1016-1524)	-	7/16	(11.1)	1/4	(6.4)
61-80	(1549-2032)	-	1/2	(12.7)	5/16	(7.9)
81-100	(2057-2540)	-	1/2	(12.7)	3/8	(9.5)

*Schedule 5S is permissible for 6 inch (152 mm) and 8 inch (203 mm) shell diameters.

RCB-3.2 SHELL COVER THICKNESS

Nominal thickness of shell cover heads, before forming, shall be at least equal to the thickness of the shell as shown in the applicable table.

 ©Tubular Exchanger Manufacturers Association, Inc.

This page intentionally blank

 ©Tubular Exchanger Manufacturers Association, Inc.

RCB-4 BAFFLES AND SUPPORT PLATES

RCB-4.1 TYPE OF TRANSVERSE BAFFLES

The segmental or multi-segmental type of baffle or tube support plate is standard. Other type baffles are permissible. Baffle cut is defined as the segment opening height expressed as a percentage of the shell inside diameter or as a percentage of the total net free area inside the shell (shell cross sectional area minus total tube area). The number of tube rows that overlap for multi-segmental baffles should be adjusted to give approximately the same net free area flow through each baffle. Baffles shall be cut near the centerline of a row of tubes, of a pass lane, of a tube lane, or outside the tube pattern. Baffles shall have a workmanlike finish on the outside diameter. Typical baffle cuts are illustrated in Figure RCB-4.1. Baffle cuts may be vertical, horizontal or rotated.

FIGURE RCB-4.1

BAFFLE CUTS FOR SEGMENTAL BAFFLES

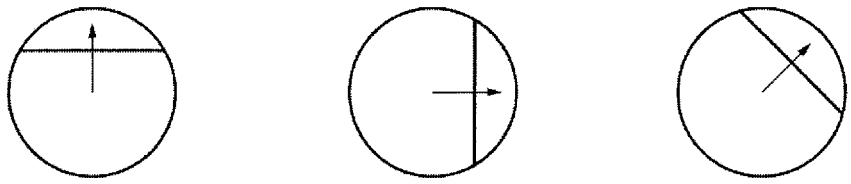

HORIZONTAL VERTICAL ROTATED

BAFFLE CUTS FOR MULTI-SEGMENTAL BAFFLES

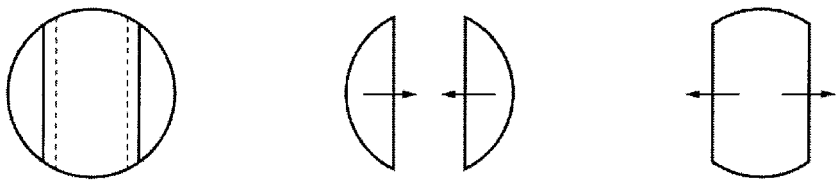

DOUBLE SEGMENTAL

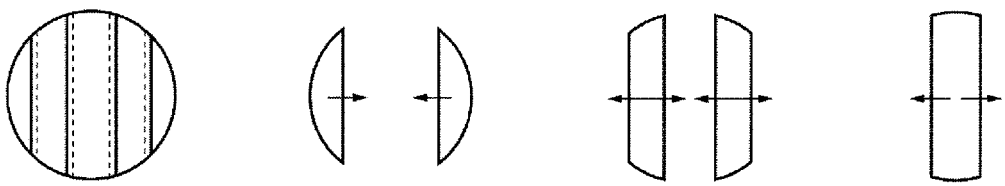

TRIPLE SEGMENTAL

RCB-4.2 TUBE HOLES IN BAFFLES AND SUPPORT PLATES

Where the maximum unsupported tube length is 36 in. (914 mm) or less, or for tubes larger in diameter than 1 1/4 in. (31.8 mm) OD, standard tube holes are to be 1/32 inch (0.8 mm) over the OD of the tubes. Where the unsupported tube length exceeds 36 in. (914 mm) for tubes 1 1/4 in. (31.8 mm) diameter and smaller, standard tube holes are to be 1/64 inch (0.4 mm) over the OD of the tubes. For pulsating conditions, tube holes may be smaller than standard. Any burrs shall be removed and the tube holes given a workmanlike finish. Baffle holes will have an over-tolerance of 0.010 inch (0.3 mm) except that 4% of the holes are allowed an over-tolerance of 0.015 inch (0.4 mm).

 ©Tubular Exchanger Manufacturers Association, Inc.

RCB-4.3 TRANSVERSE BAFFLE AND SUPPORT PLATE TO SHELL CLEARANCE

The transverse baffle and support plate clearance shall be such that the difference between the shell design inside diameter and the outside diameter of the baffle shall not exceed that indicated in Table RCB-4.3. However, where such clearance has no significant effect on shell side heat transfer coefficient or mean temperature difference, these maximum clearances may be increased to twice the tabulated values. (See Paragraph RCB-4.4.3.)

TABLE RCB-4.3

STANDARD TRANSVERSE BAFFLE AND SUPPORT PLATE TO SHELL CLEARANCES
Dimensions in Inches (mm)

Nominal Shell ID	Design ID of Shell Minus Baffle OD
6-17 (152-432)	1/8 (3.2)
18-39 (457-991)	3/16 (4.8)
40-54 (1016-1372)	1/4 (6.4)
55-69 (1397-1753)	5/16 (7.9)
70-84 (1778-2134)	3/8 (9.5)
85-100 (2159-2540)	7/16 (11.1)

The design inside diameter of a pipe shell is defined as the nominal outside diameter of the pipe, minus twice the nominal wall thickness. The design inside diameter of a plate shell is the specified inside diameter. In any case, the design inside diameter may be taken as the actual measured shell inside diameter.

RCB-4.4 THICKNESS OF BAFFLES AND SUPPORT PLATES

RCB-4.4.1 TRANSVERSE BAFFLES AND SUPPORT PLATES

The following tables show the minimum thickness of transverse baffles and support plates applying to all materials for various shell diameters and plate spacings.

The thickness of the baffle or support plates for U-tube bundles shall be based on the unsupported tube length in the straight section of the bundle. The U-bend length shall not be considered in determining the unsupported tube length for required plate thickness.

TABLE R-4.4.1

BAFFLE OR SUPPORT PLATE THICKNESS
Dimensions in Inches (mm)

Nominal Shell ID	Plate Thickness									
	Unsupported tube length between central baffles. End spaces between tubesheets and baffles are not a consideration.									
	24 (610) and Under		Over 24 (610) to 36 (914) Inclusive		Over 36 (914) to 48 (1219) Inclusive		Over 48 (1219) to 60 (1524) Inclusive		Over 60 (1524)	
6-14	(152-356)	1/8	(3.2)	3/16	(4.8)	1/4	(6.4)	3/8	(9.5)	3/8	(9.5)
15-28	(381-711)	3/16	(4.8)	1/4	(6.4)	3/8	(9.5)	3/8	(9.5)	1/2	(12.7)
29-38	(737-965)	1/4	(6.4)	5/16	(7.9)	3/8	(9.5)	1/2	(12.7)	5/8	(15.9)
39-60	(991-1524)	1/4	(6.4)	3/8	(9.5)	1/2	(12.7)	5/8	(15.9)	5/8	(15.9)
61-100	(1549-2540)	3/8	(9.5)	1/2	(12.7)	5/8	(15.9)	3/4	(19.1)	3/4	(19.1)

 ©Tubular Exchanger Manufacturers Association, Inc.

TABLE CB-4.4.1

BAFFLE OR SUPPORT PLATE THICKNESS
Dimensions in Inches (mm)

Nominal Shell ID		Plate Thickness					
		Unsupported tube length between central baffles. End spaces between tubesheets and baffles are not a consideration.					
		12 (305) and Under	Over 12 (305) to 24 (610) Inclusive	Over 24 (610) to 36 (914) Inclusive	Over 36 (914) to 48 (1219) Inclusive	Over 48 (1219) to 60 (1524) Inclusive	Over 60 (1524)
6-14	(152-356)	1/16 (1.6)	1/8 (3.2)	3/16 (4.8)	1/4 (6.4)	3/8 (9.5)	3/8 (9.5)
15-28	(381-711)	1/8 (3.2)	3/16 (4.8)	1/4 (6.4)	3/8 (9.5)	3/8 (9.5)	1/2 (12.7)
29-38	(737-965)	3/16 (4.8)	1/4 (6.4)	5/16 (7.9)	3/8 (9.5)	1/2 (12.7)	5/8 (15.9)
39-60	(991-1524)	1/4 (6.4)	1/4 (6.4)	3/8 (9.5)	1/2 (12.7)	5/8 (15.9)	5/8 (15.9)
61-100	(1549-2540)	1/4 (6.4)	3/8 (9.5)	1/2 (12.7)	5/8 (15.9)	3/4 (19.1)	3/4 (19.1)

R-4.4.2 LONGITUDINAL BAFFLES

R-4.4.2.1 LONGITUDINAL BAFFLES WITH LEAF SEALS

Longitudinal baffles with leaf (or other type) seals shall not be less than 1/4" (6.4 mm) nominal metal thickness.

R-4.4.2.2 WELDED-IN LONGITUDINAL BAFFLES

The thickness of longitudinal baffles that are welded to the shell cylinder shall not be less than the thicker of 1/4" (6.4 mm) or the thickness calculated using the following formula:

$$t = b\sqrt{\frac{qB}{1.5S}}$$

where

t = Minimum baffle plate thickness, in. (mm)

B = Table value as shown in Table RCB-9.1.3.2 (linear interpolation may be used)

q = Maximum pressure drop across baffle, psi (kPA)

S = Code allowable stress in tension, at design temperature, psi (kPa)

b = Plate dimension. See Table RCB-9.1.3.2, in. (mm)

a = Plate dimension. See Table RCB-9.1.3.2, in. (mm)

The designer shall consider the effects of pressure drop and unsupported span and perform a calculation for the portion of the long baffle that will require the greatest thickness. The longitudinal baffle shall be considered fixed along the two sides where it is welded to the shell cylinder. It shall be considered simply supported along the sides where it is supported by the tubesheet groove or transverse baffle.

R-4.4.2.3 LONGITUDINAL BAFFLE WELD SIZE

Welded-in longitudinal baffles shall be attached with fillet welds on each side with a minimum leg of 3/4 t from Paragraph R-4.4.2.2. Other types of attachments are allowed but shall be of equivalent strength.

 ©Tubular Exchanger Manufacturers Association, Inc.

CB-4.4.2 LONGITUDINAL BAFFLES

CB-4.4.2.1 LONGITUDINAL BAFFLES WITH LEAF SEALS

Longitudinal carbon steel baffles with leaf (or other type) seals shall not be less than 1/4" (6.4 mm) nominal metal thickness.

Longitudinal alloy baffles with leaf (or other type) seals shall not be less than 1/8" (3.2 mm) nominal metal thickness.

CB-4.4.2.2 WELDED-IN LONGITUDINAL BAFFLES

The thickness of longitudinal baffles that are welded to the shell cylinder shall be determined as shown in Paragraph R-4.4.2.2.

CB-4.4.2.3 LONGITUDINAL BAFFLE WELD SIZE

Welded-in longitudinal baffles shall be attached with fillet welds on each side with a minimum leg of 3/4 t from Paragraph R-4.4.2.2. Other types of attachments are allowed but shall be of equivalent strength.

RCB-4.4.3 SPECIAL PRECAUTIONS

Special consideration should be given to baffles, tube supports and bundles if any of the following conditions are applicable:

(1) Baffles and support plates subjected to pulsations.

(2) Baffles and support plates engaging finned tubes.

(3) Longitudinal baffles subjected to large differential pressures due to high shell side fluid pressure drop.

(4) Support of tube bundles when clearances allowed by RCB-4.3 or RCB-4.5 are exceeded.

Solutions may include any of the following:

(1) Decreasing the baffle spacing within the allowable pressure drop.

(2) Providing ears on the baffles to capture additional tube rows in the inlet and outlet spaces.

(3) Providing additional supports in the baffle spaces that do not hinder fluid flow in the bundle.

(4) Modifying the baffle type.

RCB-4.5 SPACING OF BAFFLES AND SUPPORT PLATES

The following are general guidelines for determining maximum and minimum baffle/support spacing and unsupported tube lengths. The actual baffle spacing should be determined by a designer competent in the thermal/hydraulic design of shell and tube heat exchangers (see E-1.1). Consideration shall be given to operating conditions, heat load, elimination of flow induced vibration (see Section 6), available tube length, and nozzle locations when determining the spacing of the baffle and support plates.

RCB-4.5.1 MINIMUM SPACING

Segmental baffles normally should not be spaced closer than 1/5 of the shell ID or 2 in. (51 mm), whichever is greater. However, special design considerations may dictate a closer spacing.

RCB-4.5.2 MAXIMUM SPACING

Tube support plates shall be so spaced that the unsupported tube span does not exceed the value indicated in Table RCB-4.5.2 for the tube material used.

 ©Tubular Exchanger Manufacturers Association, Inc.

TABLE RCB-4.5.2

MAXIMUM UNSUPPORTED STRAIGHT TUBE SPANS
Dimensions in Inches (mm)

Tube OD	Tube Materials and Temperature Limits ° F (° C)	
	Carbon Steel & High Alloy Steel, 750 (399) Low Alloy Steel, 850 (454) Nickel-Copper, 600 (316) Nickel, 850 (454) Nickel-Chromium-Iron, 1000 (538)	Aluminum & Aluminum Alloys, Copper & Copper Alloys, Titanium Alloys At Code Maximum Allowable Temperature
1/4 (6.4)	26 (660)	22 (559)
3/8 (9.5)	35 (889)	30 (762)
1/2 (12.7)	44 (1118)	38 (965)
5/8 (15.9)	52 (1321)	45 (1143)
3/4 (19.1)	60 (1524)	52 (1321)
7/8 (22.2)	69 (1753)	60 (1524)
1 (25.4)	74 (1880)	64 (1626)
1 1/4 (31.8)	88 (2235)	76 (1930)
1 1/2 (38.1)	100 (2540)	87 (2210)
2 (50.8)	125 (3175)	110 (2794)
2 1/2 (63.5)	125 (3175)	110 (2794)
3 (76.2)	125 (3175)	110 (2794)

Notes:

(1) Above the metal temperature limits shown, maximum spans shall be reduced in direct proportion to the fourth root of the ratio of elastic modulus at design temperature to elastic modulus at tabulated limit temperature.

(2) In the case of circumferentially finned tubes, the tube OD shall be the diameter at the root of the fins and the corresponding tabulated or interpolated span shall be reduced in direct proportion to the fourth root of the ratio of the weight per unit length of the tube, if stripped of fins to that of the actual finned tube.

(3) The maximum unsupported tube spans in Table RCB-4.5.2 do not consider potential flow induced vibration problems. Refer to Section 6 for vibration criteria.

RCB-4.5.3 BAFFLE SPACING

Baffles normally shall be spaced uniformly, spanning the effective tube length. When this is not possible, the baffles nearest the ends of the shell, and/or tubesheets, shall be located as close as practical to the shell nozzles. The remaining baffles normally shall be spaced uniformly.

RCB-4.5.4 U-TUBE REAR SUPPORT

The support plates or baffles adjacent to the bends in U-tube exchangers shall be so located that, for any individual bend, the sum of the bend diameter plus the straight lengths measured along both legs from supports to bend tangents does not exceed the maximum unsupported span determined from Paragraph RCB-4.5.2. Where bend diameters prevent compliance, special provisions in addition to the above shall be made for support of the bends.

RCB-4.5.5 SPECIAL CASES

When pulsating conditions are specified by the purchaser, unsupported spans shall be as short as pressure drop restrictions permit. If the span under these circumstances approaches the maximum permitted by Paragraph RCB-4.5.2, consideration should be given to alternative flow arrangements which would permit shorter spans under the same pressure drop restrictions.

 ©Tubular Exchanger Manufacturers Association, Inc.

RCB-4.5.6 TUBE BUNDLE VIBRATION

Shell side flow may produce excitation forces which result in destructive tube vibrations. Existing predictive correlations are inadequate to ensure that any given design will be free of such damage. The vulnerability of an exchanger to flow induced vibration depends on the flow rate, tube and baffle materials, unsupported tube spans, tube field layout, shell diameter, and inlet/outlet configuration. Section 6 of these Standards contains information which is intended to alert the designer to potential vibration problems. In any case, and consistent with Paragraph G-5, the manufacturer is not responsible or liable for any direct, indirect, or consequential damages resulting from vibration.

*RCB-4.6 IMPINGEMENT BAFFLES AND EROSION PROTECTION

The following paragraphs provide limitations to prevent or minimize erosion of tube bundle components at the entrance and exit areas. These limitations have no correlation to tube vibration and the designer should refer to Section 6 for information regarding this phenomenon.

In this section, V is defined as the linear velocity of the fluid in feet per second (meters per second) and ρ is its density in pounds per cubic foot (kilograms per cubic meter)

*RCB-4.6.1 SHELL SIDE IMPINGEMENT PROTECTION REQUIREMENTS

An impingement plate, or other means to protect the tube bundle against impinging fluids, shall be provided for all shell side inlet nozzle(s), unless the product of ρV^2 in the inlet nozzle does not exceed the following limits:

1500 (2232) for non-abrasive, single phase fluids (liquids, gases, or vapors);
500 (744) for all other liquids, including a liquid at its boiling point;

For all other gases and vapors, including steam and all nominally saturated vapors, and for liquid vapor mixtures, impingement protection is required.

A properly designed diffuser may be used to reduce line velocities at shell entrance. For distributor belt type diffusers, see RGP section.

*RCB-4.6.2 SHELL OR BUNDLE ENTRANCE AND EXIT AREAS

For shell or bundle entrance and exit areas, in no case can ρV^2 be over 4,000 (5953). This requirement is independent of impingement protection.

*RCB-4.6.2.1 SHELL ENTRANCE OR EXIT AREA WITH IMPINGEMENT PLATE

When an impingement plate is provided, the flow area shall be considered as the unrestricted area between the inside diameter of the shell at the nozzle and the face of the impingement plate.

*RCB-4.6.2.2 SHELL ENTRANCE OR EXIT AREA WITHOUT IMPINGEMENT PLATE

For determining the area available for flow at the entrance or exit of the shell where there is no impingement plate, the flow area between the tubes within the projection of the nozzle bore and the actual unrestricted radial flow area from under the nozzle or dome measured between the tube bundle and shell inside diameter may be considered.

*RCB-4.6.2.3 BUNDLE ENTRANCE OR EXIT AREA WITH IMPINGEMENT PLATE

When an impingement plate is provided under a nozzle, the flow area shall be the unrestricted area between the tubes within the compartments between baffles and/or tubesheet.

*RCB-4.6.2.4 BUNDLE ENTRANCE OR EXIT AREA WITHOUT IMPINGEMENT PLATE

For determining the area available for flow at the entrance or exit of the tube bundle where there is no impingement plate, the flow area between the tubes within the compartments between baffles and/or tubesheet may be considered.

*RCB-4.6.2.5 ROD TYPE IMPINGEMENT PROTECTION AREAS

For determining the shell or bundle exit or entrance areas, the methods used for calculating these areas for bundles without impingement plates may be used, substituting the rod pitch and diameter for the tube pitch and diameter.

 ©Tubular Exchanger Manufacturers Association, Inc.

RCB-4.6.2.6 DISTRIBUTOR BELT IMPINGEMENT PROTECTION AREAS

For determining the shell or bundle exit or entrance areas, the methods used for calculating these areas for bundles without impingement plates may be used, considering the size and shape of the distributor opening(s) in the inner shell.

RCB-4.6.3 TUBE SIDE

Consideration shall be given to the need for special devices to prevent erosion of the tube ends under any of the following conditions:

(1) Use of an axial inlet nozzle.

(2) Liquid ρV^2 in the inlet nozzle is in excess of 6000 (8928).

(3) When there is two-phase flow.

RCB-4.7 TIE RODS AND SPACERS

Tie rods and spacers, or other equivalent means of tying the baffle system together, shall be provided to retain all transverse baffles and tube support plates securely in position.

R-4.7.1 NUMBER AND SIZE OF TIE RODS

Table R-4.7.1 shows suggested tie rod count and diameter for various sizes of heat exchangers. Other combinations of tie rod number and diameter with equivalent metal area are permissible; however, no fewer than four tie rods, and no diameter less than 3/8" (9.5 mm) shall be used. Any baffle segment requires a minimum of three points of support.

TABLE R-4.7.1

TIE ROD STANDARDS
Dimensions in Inches (mm)

Nominal Shell Diameter		Tie Rod Diameter		Minimum Number of Tie Rods
6 – 15	(152-381)	3/8	(9.5)	4
16 – 27	(406-686)	3/8	(9.5)	6
28 – 33	(711-838)	1/2	(12.7)	6
34 – 48	(864-1219)	1/2	(12.7)	8
49 – 60	(1245-1524)	1/2	(12.7)	10
61 – 100	(1549-2540)	5/8	(15.9)	12

CB-4.7.1 NUMBER AND SIZE OF TIE RODS

Table CB-4.7.1 shows suggested tie rod count and diameter for various sizes of heat exchangers. Other combinations of tie rod number and diameter with equivalent metal area are permissible; however, no fewer than four tie rods, and no diameter less than 3/8" (9.5 mm) shall be used above 15" (381 mm) nominal shell diameter. Any baffle segment requires a minimum of three points of support.

TABLE CB-4.7.1

TIE ROD STANDARDS
Dimensions in Inches (mm)

Nominal Shell Diameter		Tie Rod Diameter		Minimum Number of Tie Rods
6 – 15	(152-381)	1/4	(6.4)	4
16 – 27	(406-686)	3/8	(9.5)	6
28 – 33	(711-838)	1/2	(12.7)	6
34 – 48	(864-1219)	1/2	(12.7)	8
49 – 60	(1245-1524)	1/2	(12.7)	10
61 – 100	(1549-2540)	5/8	(15.9)	12

 ©Tubular Exchanger Manufacturers Association, Inc.

RCB-4.8 BYPASS SEALING

When required by thermal design, bypass clearances that exceed 5/8" (16 mm) should be sealed as follows:

(1) When the distance between baffle cut edges is six tube pitches or less, a single seal, located approximately halfway between the baffle cuts, should be provided.

(2) When the distance between baffle cut edges exceeds six tube pitches, multiple seals should be provided. A seal should be located every five to seven tube pitches between the baffle cuts, with the outermost seals not more than 3" (76 mm) from each baffle cut edge.

(3) Seals shall be located to minimize obstruction of mechanical cleaning lanes or should be readily removable. Continuous cleaning lanes should be maintained for square (90 degree) and rotated-square (45 degree) patterns.

RCB-4.8.1 PERIPHERAL BYPASS SEALING WHEN CLEARANCES EXCEED 5/8" (16 mm)

Peripheral bypass seals should be installed so that the seal clearance "SC" (Figure RCB-4.8) does not exceed the greater of 1/4" (6 mm) or the nominal clearance between the tubes. Peripheral bypass seals shall not restrict the bundle inlet or outlet flows.

RCB-4.8.2 INTERNAL BYPASS SEALING WHEN CLEARANCES EXCEED 5/8" (16 mm)

Internal bypass seals should be installed so that "SC" does not exceed the greater of 1/4" (6 mm) or the nominal clearance between tubes. Pass lanes parallel to the baffle cuts do not require seal devices.

RCB-4.8.3 TYPES OF BYPASS SEALS

Sealing devices may be any combination of seal bars, skid bars, dummy tubes, dummy rods, or tie rods. Seal bars shall have a minimum thickness of the lesser of 1/4" (6 mm) or the transverse baffle thickness. The minimum dummy tube thickness shall be the lesser of nominal 0.065" (1.6 mm) or the heat transfer tube thickness. Dummy rods shall have a minimum diameter of 3/8" (9.5 mm).

RCB-4.8.4 BYPASS SEAL ATTACHMENT

Sealing devices shall be securely attached to the bundle skeleton. As a minimum, peripheral bar type sealing devices should be attached to one side of every third baffle with intermittent fillet welds. Peripheral bar type sealing devices shall have a radius or bevel on the leading and trailing edges to prevent damage when inserting or removing the bundle. Tube and rod type sealing devices should be securely welded to at least one baffle, tie rods that are attached to the tubesheet and used as sealing devices are exempt from the welding requirement. Tube type sealing devices shall have one end securely closed (by crimping, welding, etc.) to prevent bypass.

FIGURE RCB-4.8

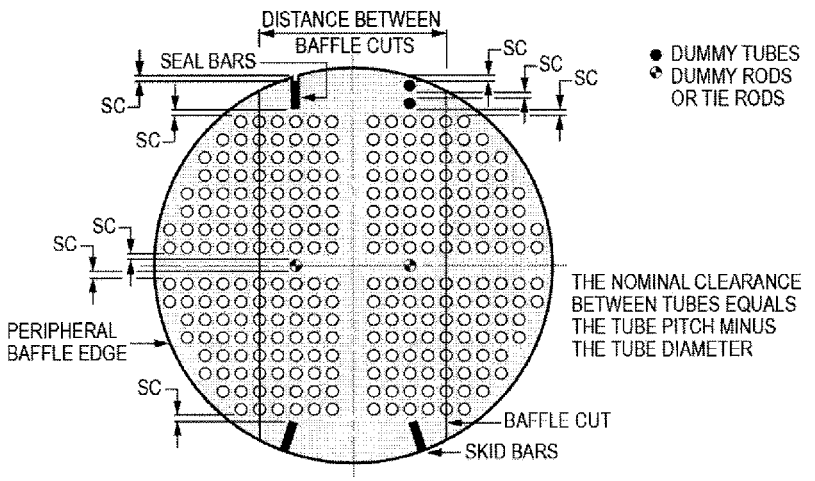

 ©Tubular Exchanger Manufacturers Association, Inc.

RCB-4.9 KETTLE TYPE REBOILERS

RCB-4.9.1 BUNDLE HOLD DOWNS

Bundle hold downs may be provided. When provided on U-tube bundles, the preferred location is over a baffle at the U-bend end. When provided on a floating head bundle, the preferred location is over the floating head. Some methods are shown in Figure RCB-4.9; other methods which satisfy the intent are acceptable.

RCB-4.9.2 BUNDLE SKID & ALIGNMENT DEVICES

Bundles may need an alignment device. Bundles that require skid bars may need skid rails. Some methods are shown in Figure RCB-4.9; other methods that satisfy the intent are acceptable.

FIGURE RCB-4.9

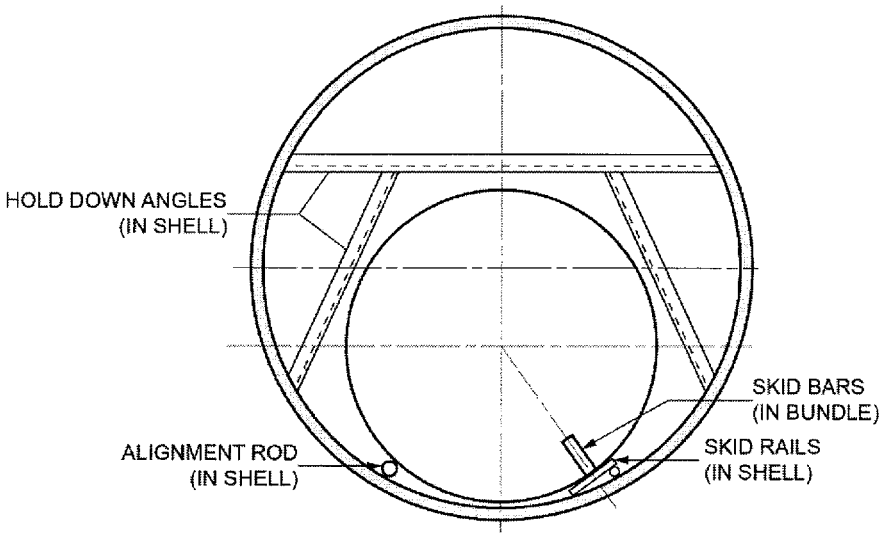

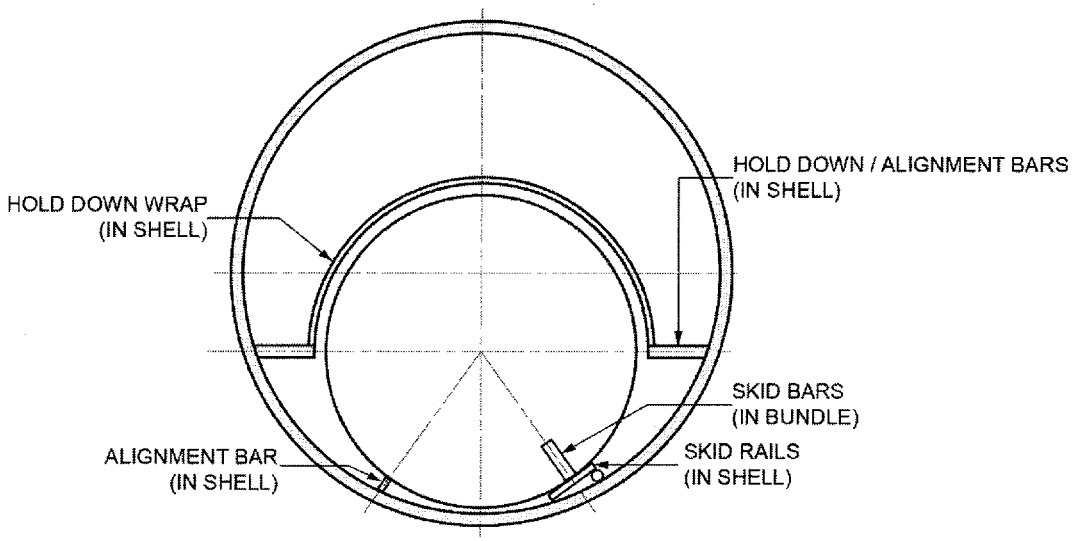

CROSS-SECTION END VIEW OF TUBE BUNDLE AND SHELL

 ©Tubular Exchanger Manufacturers Association, Inc.

This page intentionally blank

 ©Tubular Exchanger Manufacturers Association, Inc.

RCB-5 FLOATING END CONSTRUCTION

RCB-5.1 INTERNAL FLOATING HEADS (Types S and T)

R-5.1.1 MINIMUM INSIDE DEPTH OF FLOATING HEAD COVERS

For multipass floating head covers the inside depth shall be such that the minimum cross-over area for flow between successive tube passes is at least equal to 1.3 times the flow area through the tubes of one pass. For single pass floating head covers the depth at nozzle centerline shall be a minimum of one-third the inside diameter of the nozzle.

CB-5.1.1 MINIMUM INSIDE DEPTH OF FLOATING HEAD COVERS

For multipass floating head covers the inside depth shall be such that the minimum cross-over area for flow between successive tube passes is at least equal to the flow area through the tubes of one pass. For single pass floating head covers the depth at nozzle centerline shall be a minimum of one-third the inside diameter of the nozzle.

RCB-5.1.2 POSTWELD HEAT TREATMENT

Fabricated floating head covers shall be postweld heat treated when required by the Code or specified by the purchaser.

RCB-5.1.3 INTERNAL BOLTING

The materials of construction for internal bolting for floating heads shall be suitable for the mechanical design and similar in corrosion resistance to the materials used for the shell interior.

RCB-5.1.4 FLOATING HEAD BACKING DEVICES

The material of construction for split rings or other internal floating head backing devices shall be equivalent in corrosion resistance to the material used for the shell interior.

RCB-5.1.4.1 BACKING DEVICE THICKNESS (TYPE S)

The required thickness of floating head backing devices shall be determined by the following formulas or minimum thickness shown in Figure RCB-5.1.4.1, using whichever thickness is greatest.

BENDING

For Style "A", "C", & "D" $T = \left[\dfrac{(W)(H)(Y)}{(B)(S)}\right]^{1/2}$, in. Metric $T = \left[\dfrac{(W)(H)(Y)}{(B)(S)}\right]^{1/2} x\ 10^3$, mm

For Style "B" $T = \left[\dfrac{2(W)(H)(Y)}{(B)(S)}\right]^{1/2}$, in. Metric $T = \left[\dfrac{2(W)(H)(Y)}{(B)(S)}\right]^{1/2} x\ 10^3$, mm

SHEAR

$t = \dfrac{W}{(\pi)(Z)(S_s)}$, in. Metric $t = \dfrac{W}{(\pi)(Z)(S_s)}\ x\ 10^6$, mm

where

$A =$ Ring OD, in. (mm)

$B =$ As shown in Fig. RCB-5.1.4.1, in. (mm)

$C =$ Bolt circle, in. (mm)

$W =$ Design bolt load (as ref. in ASME Code Appendix 2), lb.(kN)

$Y =$ From ASME Code Fig. 2-7.1 using $K = A/B$

$Z =$ Tubesheet OD, in. (mm)

 ©Tubular Exchanger Manufacturers Association, Inc.

$H =$ $(C\text{-}B)/2$, in. (mm)

$S =$ Code allowable stress in tension (using shell design temperature), psi (kPa)

$S_s =$ $0.8S$, psi (kPa)

$L =$ Greater of T or t, in. (mm)

$S_{br} =$ S of backing ring, psi (kPa)

$S_{kr} =$ S of split key ring, psi (kPa)

$S_{ts} =$ S of tubesheet, psi (kPa)

NOTES

1. Caution: For styles "A", "B" & "D" check thickness in shear of the tubesheet if $S_{ts} < S_{br}$
2. Caution: Style "C" check thickness in shear of the tubesheet if $S_{ts} < S_{kr}$

See Figure RCB-5.1.4.1 for illustration of suggested styles. Other styles are permissible.

FIGURE RCB-5.1.4.1

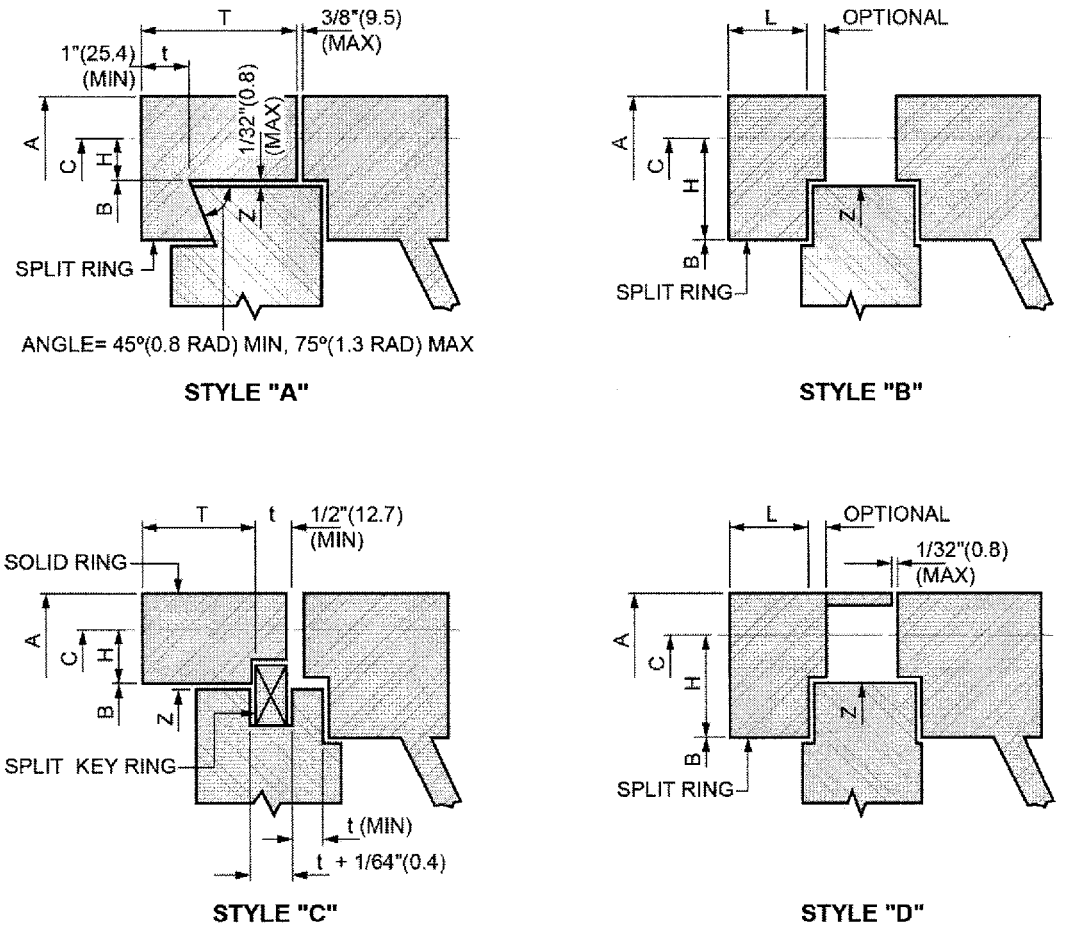

 ©Tubular Exchanger Manufacturers Association, Inc.

RCB-5.1.5 TUBE BUNDLE SUPPORTS

When a removable shell cover is used, a partial support plate, or other suitable means, shall be provided to support the floating head end of the tube bundle. If a plate is used, the thickness shall equal or exceed the support plate thickness specified in Table R-4.4.1 or CB-4.4.1 as applicable for unsupported tube lengths over 60 in. (1524 mm).

RCB-5.1.6 FLOATING HEAD NOZZLES

The floating head nozzle and packing box for a single pass exchanger shall comply with the requirements of Paragraphs RCB-5.2.1, RCB-5.2.2, and RCB-5.2.3.

RCB-5.1.7 PASS PARTITION PLATES

The nominal thickness of floating head pass partitions shall be designed in accordance with Paragraph RCB-9.1.3.

RCB-5.2 OUTSIDE PACKED FLOATING HEADS (Type P)

RCB-5.2.1 PACKED FLOATING HEADS

The cylindrical surface of packed floating head tubesheets and skirts, where in contact with packing (including allowance for expansion), shall be given a fine machine finish equivalent to 63 microinches.

RCB-5.2.2 PACKING BOXES

A machine finish shall be used on the shell or packing box where the floating tubesheet or nozzle passes through. If packing of braided material is used, a minimum of three rings of packing shall be used for 150 PSI (1034 kPa) maximum design pressure and a minimum of four rings shall be used for 300 PSI (2068 kPa) maximum design pressure. For pressures less than 150 PSI (1034 kPa), temperatures below 300° F (149° C), and non-hazardous service, fewer rings of packing may be used. Figure RCB-5.2.2 and Table RCB-5.2.2 show typical details and dimensions of packing boxes.

FIGURE RCB-5.2.2

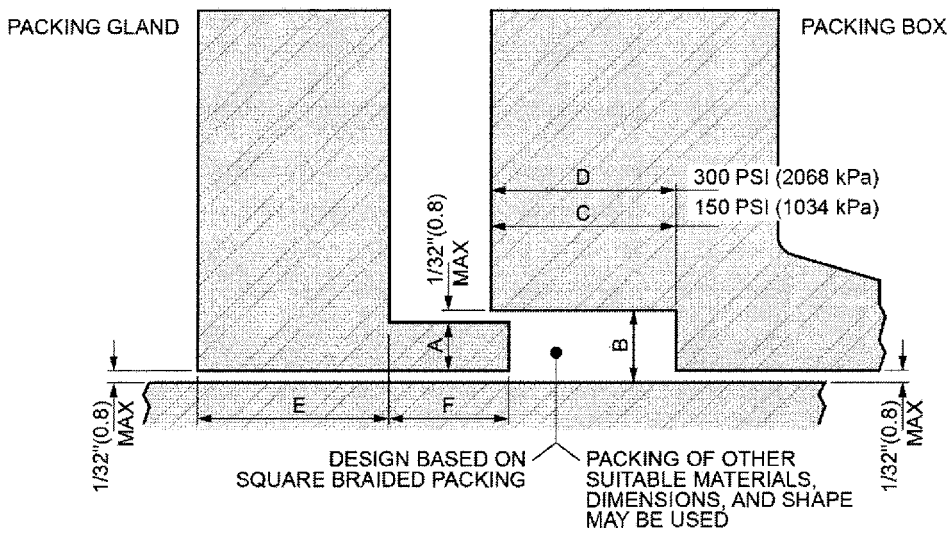

TABLE RCB-5.2.2

TYPICAL DIMENSIONS FOR PACKED FLOATING HEADS
150 PSI (1034 kPa) AND 300 PSI (2068 kPa) WITH 600° F (316° C) MAX. TEMP.

Dimensions in Inches

SIZE	A	B	C	D	E (MIN)	F	BOLTS	
							NO.	SIZE
6–8	3/8	7/16	1 1/4	1 5/8	1	3/4	4	5/8
9–13	3/8	7/16	1 1/4	1 5/8	1	3/4	6	5/8
14–17	3/8	7/16	1 1/4	1 5/8	1	3/4	8	5/8
18–21	3/8	7/16	1 1/4	1 5/8	1	3/4	10	5/8
22–23	3/8	7/16	1 1/4	1 5/8	1	3/4	12	5/8
24–29	1/2	9/16	1 3/4	2 1/4	1 1/8	1	16	5/8
30–33	1/2	9/16	1 3/4	2 1/4	1 1/8	1	20	5/8
34–43	1/2	9/16	1 3/4	2 1/4	1 1/8	1	24	5/8
44–51	5/8	11/16	2 1/8	2 3/4	1 1/4	1 1/4	28	5/8
52–60	5/8	11/16	2 1/8	2 3/4	1 1/4	1 1/4	32	5/8

Dimensions in Millimeters

SIZE	A	B	C	D	E (MIN)	F	BOLTS	
							NO.	SIZE
152-203	9.53	11.11	31.75	41.28	25.40	19.05	4	M16
229-330	9.53	11.11	31.75	41.28	25.40	19.05	6	M16
356-432	9.53	11.11	31.75	41.28	25.40	19.05	8	M16
457-533	9.53	11.11	31.75	41.28	25.40	19.05	10	M16
559-584	9.53	11.11	31.75	41.28	25.40	19.05	12	M16
610-737	12.70	14.29	44.45	57.15	28.58	25.40	16	M16
762-838	12.70	14.29	44.45	57.15	28.58	25.40	20	M16
864-1092	12.70	14.29	44.45	57.15	28.58	25.40	24	M16
1118-1295	15.88	17.46	53.98	69.85	31.75	31.75	28	M16
1321-1524	15.88	17.46	53.98	69.85	31.75	31.75	32	M16

Note: Nominal size of packing is same as dimension "A"

RCB-5.2.3 PACKING MATERIAL

Purchaser shall specify packing material which is compatible with the shell side process conditions.

RCB-5.2.4 FLOATING TUBESHEET SKIRT

The floating tubesheet skirt normally shall extend outward. When the skirt must extend inward, a suitable method shall be used to prevent stagnant areas between the shell side nozzle and the tubesheet.

RCB-5.2.5 PASS PARTITION PLATES

The nominal thickness of floating head pass partitions shall be designed in accordance with Paragraph RCB-9.1.3.

RCB-5.3 EXTERNALLY SEALED FLOATING TUBESHEET (Type W)

RB-5.3.1 LANTERN RING

The externally sealed floating tubesheet using square braided packing materials shall be used only for water, steam, air, lubricating oil, or similar services. Design temperature shall not exceed 375° F (191° C). Design pressure shall be limited according to Table RB-5.3.1.

 ©Tubular Exchanger Manufacturers Association, Inc.

TABLE RB-5.3.1

MAXIMUM DESIGN PRESSURE FOR EXTERNALLY SEALED FLOATING TUBESHEETS

Nominal Shell Inside Diameter Inches (mm)		Maximum Design Pressure PSI (kPa)	
6 – 24	(152-610)	300	(2068)
25 – 42	(635-1067)	150	(1034)
43 – 60	(1092-1524)	75	(517)
61 – 100	(1549-2540)	50	(345)

C-5.3.1 LANTERN RING

The externally sealed floating tubesheet shall be used only for water, steam, air, lubricating oil, or similar services. Design temperature, pressure and shell diameter shall be limited by the service, joint configuration, packing material and number of packing rings, to a maximum design pressure of 600 psi (4137 kPa).

RCB-5.3.2 LEAKAGE PRECAUTIONS

The design shall incorporate provisions in the lantern ring so that any leakage past the packing will leak to atmosphere. When endless packing rings are used, one ring of packing shall be used on each side of the lantern ring. For braided packing materials with a seam, a minimum of two rings of packing shall be used on each side of the lantern ring, with the seams staggered during assembly.

RCB-5.3.3 PACKING MATERIAL

Purchaser shall specify packing material which is compatible with the process conditions.

RCB-5.3.4 SPECIAL DESIGNS

Special designs incorporating other sealing devices may be used for the applications in Paragraph RB-5.3.1 and C-5.3.1 or other special service requirements. Provisions for leak detection shall be considered.

 ©Tubular Exchanger Manufacturers Association, Inc.

This page intentionally blank

 ©Tubular Exchanger Manufacturers Association, Inc.

RCB-6 GASKETS

RCB-6.1 TYPE OF GASKETS

Gaskets shall be selected which have a continuous periphery with no radial leak paths. This shall not exclude gaskets made continuous by welding or other methods which produce a homogeneous bond.

Gaskets made integral by welding are often harder in the welds than in the base material. Hardness limitations may be specified by the exchanger manufacturer.

R-6.2 GASKET MATERIALS

Metal based/bound gaskets shall be used for internal floating head joints, all joints for pressures of 300 psi (2068 kPa) and over, and for all joints in contact with hydrocarbons. Other gasket materials may be specified by agreement between purchaser and manufacturer. When two gasketed joints are compressed by the same bolting, provisions shall be made so that both gaskets seal, but neither gasket is crushed at the required bolt load.

CB-6.2 GASKET MATERIALS

For design pressures of 300 psi (2068 kPa) and lower, sheet gaskets may be used for external joints, unless temperature or corrosive nature of contained fluid indicates otherwise. Metal based/bound gaskets shall be used for all joints for design pressures greater than 300 psi (2068 kPa) and for internal floating head joints. Other gasket materials may be specified by agreement between purchaser and manufacturer. When two gasketed joints are compressed by the same bolting, provisions shall be made so that both gaskets seal, but neither gasket is crushed at the required bolt load.

RCB-6.3 PERIPHERAL GASKETS

RC-6.3.1

The minimum width of peripheral ring gaskets for external joints shall be 3/8" (9.5 mm) for shell sizes through 23 in. (584 mm) nominal diameter and 1/2" (12.7 mm) for all larger shell sizes.

B-6.3.1

The minimum width of peripheral ring gaskets for external joints shall be 3/8" (9.5 mm) for shell sizes through 23 in. (584 mm) nominal diameter and 1/2" (12.7 mm) for all larger shell sizes. Full face gaskets shall be used for all cast iron flanges.

RCB-6.3.2

The minimum width of peripheral ring gaskets for internal joints shall be 1/4" (6.4 mm) for all shell sizes.

RCB-6.4 PASS PARTITION GASKETS

The width of gasket web for pass partitions of channels, bonnets, and floating heads shall be not less than 1/4" (6.4 mm) for nominal diameters less than 24" (610 mm) and not less than 3/8" (9.5 mm) for all larger shell sizes.

 ©Tubular Exchanger Manufacturers Association, Inc.

R-6.5 GASKET JOINT DETAILS

Gasketed joints shall be of a confined type. A confined gasket requires a solid metal retaining element that prevents a direct radial leak path to the environment in the event of gasket extrusion or blowout. This 'confining' element can be via a recess in the flange face per Figures RCB-6.5 and F-3, or it can be via an outer retaining ring which is not used as the primary sealing element (gasket) of the joint as shown for a spiral wound gasket in Figure RCB-6.5.

A solid metal gasket which projects beyond the raised face of a raised face flange and extends to the inside of the bolts will meet the definition above for a confined joint.

A solid metal gasket on a flat face flange in which the entire gasket width is effective as a sealing element does not meet the criteria of a confined joint and is by definition an unconfined gasket.

CB-6.5 GASKET JOINT DETAILS

Gasket joints shall be of a confined or unconfined type.

FIGURE RCB-6.5

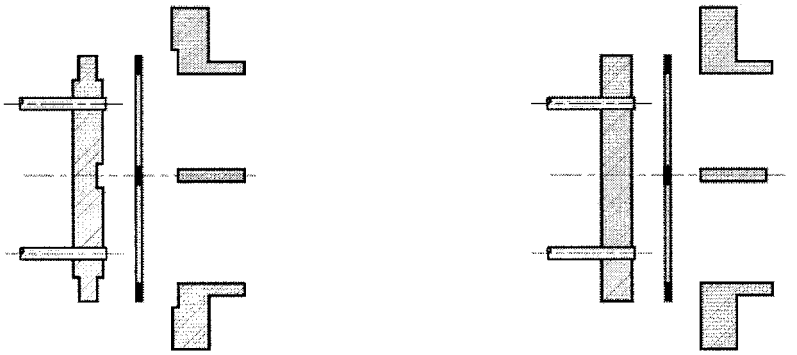

CONFINED GASKET UNCONFINED GASKET

For dimensions and tolerances, see Figure F-3.

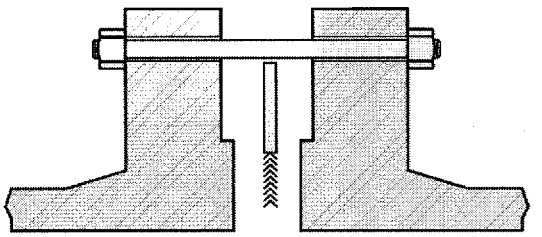

CONFINED GASKET

SPIRAL WOUND GASKET WITH OUTER METAL RING

RCB-6.6 SPARE GASKETS

Unless specifically stated otherwise, spare gaskets include only main body flange gaskets and floating head gasket.

 ©Tubular Exchanger Manufacturers Association, Inc.

*RCB-7 TUBESHEETS

RCB-7.1 TUBESHEET THICKNESS

The tubesheet thickness shall be per Code rules. When the Code does not include rules for tubesheets, ASME Code Part UHX, Appendix A of this Standard, or the manufacturer's method may be used.

R-7.1.1 MINIMUM TUBESHEET THICKNESS WITH EXPANDED TUBE JOINTS

In no case shall the total thickness minus corrosion allowance, in the areas into which tubes are to be expanded, of any tubesheet be less than the outside diameter of tubes. In no case shall the total tubesheet thickness, including corrosion allowance, be less than 3/4" (19.1 mm).

C-7.1.1 MINIMUM TUBESHEET THICKNESS WITH EXPANDED TUBE JOINTS

In no case shall the total thickness minus corrosion allowance, in the areas into which tubes are to be expanded, of any tubesheet be less than three-fourths of the tube outside diameter for tubes of 1" (25.4 mm) OD and smaller, 7/8" (22.2 mm) for 1 1/4" (31.8 mm) OD, 1" (25.4 mm) for 1 1/2" (38.1 mm) OD, or 1 1/4" (31.8 mm) for 2" (50.8 mm) OD.

B-7.1.1 MINIMUM TUBESHEET THICKNESS WITH EXPANDED TUBE JOINTS

In no case shall the total thickness minus corrosion allowance, in the areas into which tubes are to be expanded, of any tubesheet be less than three-fourths of the tube outside diameter for tubes of 1" (25.4 mm) OD and smaller, 7/8" (22.2 mm) for 1 1/4" (31.8 mm) OD, 1" (25.4 mm) for 1 1/2" (38.1 mm) OD, or 1 1/4" (31.8 mm) for 2" (50.8 mm) OD. In no case shall the total tubesheet thickness, including corrosion allowance, be less than 3/4" (19.1 mm).

RCB-7.1.2 DOUBLE TUBESHEETS

Double tubesheets may be used where the operating conditions indicate their desirability. The diversity of construction types makes it impractical to specify design rules for all cases. Paragraphs RCB-7.1.2.4, RCB-7.1.2.5, and RCB-7.1.2.6 provide the design rules for determining the thickness of double tubesheets for some of the most commonly used construction types.

RCB-7.1.2.1 MINIMUM THICKNESS

Neither component of a double tubesheet shall have a thickness less than that required by Paragraph R-7.1.1, C-7.1.1, or B-7.1.1.

RCB-7.1.2.2 VENTS AND DRAINS

Double tubesheets of the edge welded type shall be provided with vent and drain connections at the high and low points of the enclosed space.

RCB-7.1.2.3 SPECIAL PRECAUTIONS

When double tubesheets are used, special attention shall be given to the ability of the tubes to withstand, without damage, the mechanical and thermal loads imposed on them by the construction.

RCB-7.1.2.4 INTEGRAL DOUBLE TUBESHEETS

The tubesheets are connected in a manner which distributes axial load and radial thermal expansion loads between tubesheets by means of an interconnecting element capable of preventing individual radial growth of tubesheets. It is assumed that the element is rigid enough to mutually transfer all thermal and mechanical radial loads between the tubesheets. Additionally, it is understood that the tubes are rigid enough to mutually transfer all mechanically and thermal axial loads between the tubesheets.

 ©Tubular Exchanger Manufacturers Association, Inc.

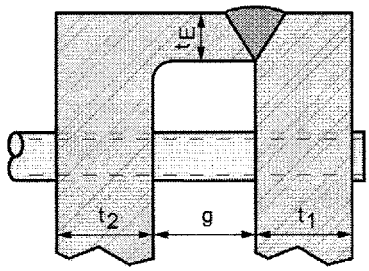

FIGURE RCB-7.1.2.4

RCB-7.1.2.4.1 TUBESHEET THICKNESS

Calculate the total combined tubesheet thickness T per Paragraph A.1.3.

where

T = Greater of the thickness, in. (mm), resulting from A.1.3.1 or A.1.3.2 using the following variable definitions:

G = Per A.1.3, in. (mm), using worst case values of shell side or tube side tubesheets at their respective design temperature.

S = Lower of the Code allowable stress, psi (kPa), for either component tubesheet at its respective design temperature.

F = Per A.1.3, using worst case values of shell side or tube side tubesheets at their respective design temperature.

All other variables are per A.1.3.

Establish the thickness of each individual tubesheet so that $t_2 + t_1 \geq T$ and the minimum individual tubesheet thicknesses t_1 and t_2 shall be the greater of R-7.1.1, C-7.1.1, B-7.1.1, or A.1.3.3, as applicable.

where

t_1 = Thickness of tube side tubesheet, in. (mm).

t_2 = Thickness of shell side tubesheet, in. (mm).

RCB-7.1.2.4.2 INTERCONNECTING ELEMENT DESIGN-SHEAR

The radial shear stress τ, psi (kPa), at attachment due to differential thermal expansion of tubesheets shall not exceed 80% of the lower Code allowable stress S of either of the tubesheet materials or the interconnecting element at their respective design temperature. The shear is defined as:

$$\tau = \frac{F_E}{t_E} \leq 0.8S$$

(Metric) $$\tau = \frac{F_E}{t_E} \times 10^6 \leq 0.8S$$

t_E = Thickness of interconnecting element, in. (mm).

where

$$F_E = \left| \frac{(\alpha_1 \Delta T_1 - \alpha_2 \Delta T_2)(t_1 E_1)(t_2 E_2)}{(t_1 E_1) + (t_2 E_2)} \right|$$

 ©Tubular Exchanger Manufacturers Association, Inc.

(Metric) $$F_E = \left| \frac{(\alpha_1 \Delta T_1 - \alpha_2 \Delta T_2)(t_1 E_1)(t_2 E_2)}{(t_1 E_1) + (t_2 E_2)} \right| \times 10^{-6}$$

where

$F_E =$ Force per unit measure due to differential radial expansion, lbf/in (kN/mm).

$E_1 =$ Modulus of Elasticity of tubesheet 1 at mean metal temperature, psi (kPa).

$E_2 =$ Modulus of Elasticity of tubesheet 2 at mean metal temperature, psi (kPa).

$\alpha_1 =$ Coefficient of thermal expansion for tubesheet 1 at mean metal temperature, in./in./ °F (mm/mm/ °C).

$\alpha_2 =$ Coefficient of thermal expansion for tubesheet 2 at mean metal temperature, in./in./ °F (mm/mm/ °C).

$\Delta T_1 =$ Difference in temperature from ambient conditions to mean metal temperature for tubesheet 1,°F (°C).

$\Delta T_2 =$ Difference in temperature from ambient conditions to mean metal temperature for tubesheet 2, °F (°C).

RCB-7.1.2.4.3 INTERCONNECTING ELEMENT DESIGN-BENDING AND TENSILE

The combined stresses from bending due to differential thermal expansion of tubesheets and axial tension due to thermal expansion of tubes shall not exceed 1.5 times the Code allowable stress S of the interconnecting element. The combined total stress of interconnecting element σ_E, psi (kPa), is given by:

$$\sigma_E = \sigma_B + \sigma_{TE} \leq 1.5\ S$$

The stress due to axial thermal expansion of tubes σ_{TE}, psi (kPa), is defined as:

$$\sigma_{TE} = \left| \frac{F_{TE}}{A_E} \right|$$

(Metric) $$\sigma_{TE} = \left| \frac{F_{TE}}{A_E} \right| \times 10^6$$

where

$$F_{TE} = \frac{(\alpha_T \Delta T_T - \alpha_E \Delta T_E)(E_T A_T)(E_E A_E)}{(E_T A_T) + (E_E A_E)}$$

(Metric) $$F_{TE} = \frac{(\alpha_T \Delta T_T - \alpha_E \Delta T_E)(E_T A_T)(E_E A_E)}{(E_T A_T) + (E_E A_E)} \times 10^{-6}$$

The stress due to bending caused by differential thermal expansion of tubesheets σ_B, psi (kPa), is defined as:

$$\sigma_B = \frac{6 M_B}{t_E^{\ 2}}$$

(Metric) $$\sigma_B = \frac{6 M_B}{t_E^{\ 2}} \times 10^6$$

 ©Tubular Exchanger Manufacturers Association, Inc.

The bending moment is defined as:

$$M_B = \frac{F_E g}{2}$$

where

$M_B =$ Bending moment per unit measure acting on interconnecting element, lbf-in/in. (mm-kN/mm).

$g =$ Spacing between tubesheets, in. (mm). The spacing between tubesheets for an integral double tubesheet is left to the discretion of the manufacturer. For other types of double tubesheets, the minimum spacing is determined in accordance with paragraph RCB-7.1.2.5.2 or RCB-7.1.2.6.2, as applicable.

$\alpha_T =$ Coefficient of thermal expansion of tubes at mean metal temperature, in./in./ °F (mm/mm/ °C).

$\alpha_E =$ Coefficient of thermal expansion of interconnecting element at mean metal temperature, in./in./ °F (mm/mm/ °C).

$\Delta T_T =$ Difference in temperature from ambient conditions to mean metal temperature for tubes, °F (°C).

$\Delta T_E =$ Difference in temperature from ambient conditions to mean metal temperature for interconnecting element, °F (°C)

$E_T =$ Modulus of Elasticity of tubes at mean metal temperature, psi (kPa).

$E_E =$ Modulus of Elasticity of interconnecting element at mean metal temperature, psi (kPa)

$A_T =$ Total cross sectional area of tubes, in^2 (mm^2).

$A_E =$ Total cross sectional area of interconnecting element, in^2 (mm^2).

$F_{TE} =$ Resultant force due to the difference in thermal expansion between tubes and element, lbf (kN).

RCB-7.1.2.4.4 TUBE STRESS CONSIDERATION-AXIAL STRESS

The axial stresses in the tubes due to thermal expansion and pressure load shall not exceed the Code allowable stress S of the tubes at design temperature.

The total combined stress of the tubes σ_T, psi (kPa), is given by:

$$\sigma_T = \sigma_P + \sigma_{TT} \leq S$$

The axial stress due to pressure σ_P , psi (kPa), is defined as:

$$\sigma_P = \frac{P\pi\left(G^2 - Nd_0^{\,2}\right)}{4A_T}$$

where

$P =$ Greater of shell side or tube side design pressure, psi (kPa).

$G =$ Per Paragraph A.1.3, in. (mm).

$N =$ Number of tubes

$d_0 =$ Tube OD between tubesheets, in. (mm).

 ©Tubular Exchanger Manufacturers Association, Inc.

The stress due to axial thermal expansion of tubes σ_{TT}, psi (kPa), is defined as:

$$\sigma_{TT} = \frac{F_{TE}}{A_T}$$

(Metric) $$\sigma_{TT} = \frac{F_{TE}}{A_T} \times 10^6$$

RCB-7.1.2.5 CONNECTED DOUBLE TUBESHEETS

The tubesheets are connected in a manner which distributes axial load between tubesheets by means of an interconnecting cylinder. The effect of the differential radial growth between tubesheets is a major factor in tube stresses and spacing between tubesheets. It is assumed the interconnecting cylinder and tubes are rigid enough to mutually transfer all mechanical and thermal axial loads between the tubesheets.

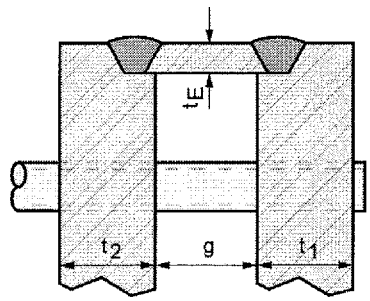

FIGURE RCB-7.1.2.5

RCB-7.1.2.5.1 TUBESHEET THICKNESS

Calculate the total combined tubesheet thickness T per Paragraph A.1.3.

where

T = Greater of the thickness, in. (mm), resulting from Paragraphs A.1.3.1 or A.1.3.2 using variables as defined in Paragraph RCB-7.1.2.4.1.

Establish the thickness of each individual tubesheet so that $t_2 + t_1 \geq T$ and the minimum individual tubesheet thickness t_1 and t_2 shall be the greater of Paragraph R-7.1.1, C-7.1.1, B-7.1.1, or A.1.3.3, when applicable.

t_1 = Thickness of tube side tubesheet, in. (mm).

t_2 = Thickness of shell side tubesheet, in. (mm).

 ©Tubular Exchanger Manufacturers Association, Inc.

RCB-7.1.2.5.2 MINIMUM SPACING BETWEEN TUBESHEETS

The minimum spacing g, in. (mm), between tubesheets required to avoid overstress of tubes resulting from differential thermal growth of individual tubesheets is given by:

$$g = \sqrt{\frac{d_0 \Delta r E_T}{0.27 Y_T}}$$

where

d_0 = Tube OD between tubesheets, in. (mm).

Y_T = Yield strength of the tube material at maximum metal temperature, psi (kPa).

Δr = Differential radial expansion between adjacent tubesheets, in. (mm). (Measured from center of tubesheet to D_{TL}).

$$\Delta r = \left| \left(\frac{D_{TL}}{2} \right) \left(\alpha_2 \Delta T_2 - \alpha_1 \Delta T_1 \right) \right|$$

where

D_{TL} = Outer tube limit, in. (mm).

RCB-7.1.2.5.3 INTERCONNECTING ELEMENT DESIGN – AXIAL STRESS

The interconnecting element axial stress σ_{TE}, psi (kPa), due to the thermal expansion of the tubes, shall not exceed the Code allowable stress S of the interconnecting element at design temperature. The axial stress is defined as:

$$\sigma_{TE} = \left| \frac{F_{TE}}{A_E} \right|$$

(Metric) $$\sigma_{TE} = \left| \frac{F_{TE}}{A_E} \right| \times 10^6$$

where

$$F_{TE} = \frac{\left(\alpha_T \Delta T_T - \alpha_E \Delta T_E\right)\left(E_T A_T\right)\left(E_E A_E\right)}{\left(E_T A_T\right) + \left(E_E A_E\right)}$$

(Metric) $$F_{TE} = \frac{\left(\alpha_T \Delta T_T - \alpha_E \Delta T_E\right)\left(E_T A_T\right)\left(E_E A_E\right)}{\left(E_T A_T\right) + \left(E_E A_E\right)} \times 10^{-6}$$

 ©Tubular Exchanger Manufacturers Association, Inc.

RCB-7.1.2.5.4 TUBE STRESS CONSIDERATIONS – AXIAL STRESS

The axial stresses in the tubes due to thermal expansion and pressure load shall not exceed the Code allowable stress S of the tubes at design temperature.

The total combined stress of the tubes σ_T, psi (kPa), is given by:

$$\sigma_T = \sigma_P + \sigma_{TT} \leq S$$

The axial stress due to pressure σ_P, psi (kPa), is defined as:

$$\sigma_P = \frac{P\pi\left(G^2 - Nd_0^{\,2}\right)}{4A_T}$$

where

P = Greater of shell side or tube side design pressure, psi (kPa).

G = Per Paragraph A.1.3, in. (mm).

N = Number of tubes

d_0 = Tube OD between tubesheets, in. (mm).

The stress due to axial thermal expansion of tubes σ_{TT}, psi (kPa), is defined as:

$$\sigma_{TT} = \frac{F_{TE}}{A_T}$$

(Metric) $$\sigma_{TT} = \frac{F_{TE}}{A_T} \times 10^6$$

 ©Tubular Exchanger Manufacturers Association, Inc.

RCB-7.1.2.6 SEPARATE DOUBLE TUBESHEETS

The tubesheets are connected only by the interconnecting tubes. The effect of differential radial growth between tubesheets is a major factor in tube stresses and spacing between tubesheets. It is assumed that no loads are transferred between the tubesheets.

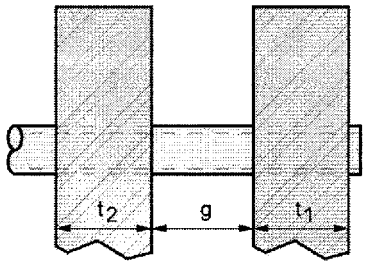

FIGURE RCB-7.1.2.6

RCB-7.1.2.6.1 TUBESHEET THICKNESS

Calculate tube side tubesheet thickness per Paragraph A.1.3. Use all variables as defined per TEMA, neglecting all considerations of shell side design conditions.

Calculate shell side tubesheet thickness per Paragraph A.1.3. Use all variables as defined per TEMA, neglecting all considerations of tube side design conditions.

RCB-7.1.2.6.2 MINIMUM SPACING BETWEEN TUBESHEETS

The minimum spacing g, in. (mm), between tubesheets required to avoid overstress of tubes resulting from differential thermal growth of individual tubesheets is given by:

$$g = \sqrt{\frac{d_0 \Delta r E_T}{0.27 Y_T}}$$

*RCB-7.2 TUBE HOLES IN TUBESHEETS

RCB-7.2.1 TUBE HOLE DIAMETERS AND TOLERANCES

Tube holes in tubesheets shall be finished to the diameters and tolerances shown in Tables RCB-7.2.1 and RCB-7.2.1M, column (a). Interpolation and extrapolation are permitted. To minimize work hardening, a closer fit between tube OD and tube ID as shown in column (b) may be provided when specified by the purchaser.

 ©Tubular Exchanger Manufacturers Association, Inc.

TABLE RCB-7.2.1

TUBE HOLE DIAMETERS AND TOLERANCES
(All Dimensions in Inches)

Nominal Tube OD	Nominal Tube Hole Diameter and Under Tolerance				Over Tolerance; 96% of tube holes must meet value in column (c). Remainder may not exceed value in column (d)	
	Standard Fit (a)		Special Close Fit (b)			
	Nominal Diameter	Under Tolerance	Nominal Diameter	Under Tolerance	(c)	(d)
1/4	0.259	0.004	0.257	0.002	0.002	0.007
3/8	0.384	0.004	0.382	0.002	0.002	0.007
1/2	0.510	0.004	0.508	0.002	0.002	0.008
5/8	0.635	0.004	0.633	0.002	0.002	0.010
3/4	0.760	0.004	0.758	0.002	0.002	0.010
7/8	0.885	0.004	0.883	0.002	0.002	0.010
1	1.012	0.004	1.010	0.002	0.002	0.010
1 1/4	1.264	0.006	1.261	0.003	0.003	0.010
1 1/2	1.518	0.007	1.514	0.003	0.003	0.010
2	2.022	0.007	2.018	0.003	0.003	0.010
2 1/2	2.528	0.010	2.523	0.004	0.004	0.010
3	3.033	0.012	3.027	0.004	0.004	0.010

TABLE RCB-7.2.1M

TUBE HOLE DIAMETERS AND TOLERANCES
(All Dimensions in mm)

Nominal Tube OD	Nominal Tube Hole Diameter and Under Tolerance				Over Tolerance; 96% of tube holes must meet value in column (c). Remainder may not exceed value in column (d)	
	Standard Fit (a)		Special Close Fit (b)			
	Nominal Diameter	Under Tolerance	Nominal Diameter	Under Tolerance	(c)	(d)
6.4	6.58	0.10	6.53	0.05	0.05	0.18
9.5	9.75	0.10	9.70	0.05	0.05	0.18
12.7	12.95	0.10	12.90	0.05	0.05	0.20
15.9	16.13	0.10	16.08	0.05	0.05	0.25
19.1	19.30	0.10	19.25	0.05	0.05	0.25
22.2	22.48	0.10	22.43	0.05	0.05	0.25
25.4	25.70	0.10	25.65	0.05	0.05	0.25
31.8	32.11	0.15	32.03	0.08	0.08	0.25
38.1	38.56	0.18	38.46	0.08	0.08	0.25
50.8	51.36	0.18	51.26	0.08	0.08	0.25
63.5	64.20	0.25	64.07	0.10	0.10	0.25
76.2	77.04	0.30	76.89	0.11	0.10	0.25

 ©Tubular Exchanger Manufacturers Association, Inc.

RCB-7.2.2 TUBESHEET LIGAMENTS

Tables RCB-7.2.2 and RCB-7.2.2M give permissible tubesheet ligaments, drill drift and recommended maximum tube wall thicknesses.

TABLE RCB-7.2.2

TABLE OF TUBESHEET LIGAMENTS AND RECOMMENDED HEAVIEST TUBE GAGES
(All Dimensions in Inches)

Tube Dia d_o	Tube Pitch p	p/d_o	$p - d_o$	Heaviest Recom-mended Tube Gage BWG	Tube Hole Dia. Std. Fit	Nominal Liga-ment Width	Minimum Std. Ligaments (96% of ligaments must equal or exceed values tabulated below) Tubesheet Thickness								Minimum Permissible Ligament Width
							1	1 1/2	2	2 1/2	3	4	5	6	
1/4	5/16	1.25	1/16	22	0.259	0.054	0.025	0.025	0.025	0.025	-	-	-	-	0.025
	3/8	1.50	1/8	20		0.116	0.083	0.077	0.070	0.064	-	-	-	-	0.060
3/8	29/64	1.21	5/64	20	0.384	0.069	0.041	0.036	0.032	0.028	0.024	-	-	-	0.030
	1/2	1.33	1/8	18		0.116	0.087	0.083	0.079	0.075	0.070	0.062	-	-	0.060
	17/32	1.42	5/32	18		0.147	0.119	0.114	0.110	0.106	0.102	0.093	0.085	0.076	0.075
1/2	5/8	1.25	1/8	18	0.510	0.115	0.089	0.085	0.082	0.079	0.076	0.069	0.063	-	0.060
	21/32	1.31	5/32	16		0.146	0.120	0.117	0.113	0.110	0.107	0.101	0.094	0.088	0.075
	11/16	1.38	3/16	16		0.178	0.151	0.148	0.145	0.142	0.138	0.132	0.126	0.119	0.090
5/8	3/4	1.20	1/8	16	0.635	0.115	0.080	0.077	0.075	0.072	0.070	0.065	0.059	0.054	0.060
	25/32	1.25	5/32	15		0.146	0.111	0.109	0.106	0.103	0.101	0.096	0.091	0.086	0.075
	13/16	1.30	3/16	14		0.178	0.142	0.140	0.137	0.135	0.132	0.127	0.122	0.117	0.090
	7/8	1.40	1/4	14		0.240	0.205	0.202	0.200	0.197	0.195	0.189	0.184	0.179	0.120
3/4	15/16	1.25	3/16	13	0.760	0.178	0.143	0.141	0.139	0.137	0.135	0.130	0.126	0.122	0.090
	1	1.33	1/4	12		0.240	0.206	0.204	0.201	0.199	0.197	0.193	0.189	0.184	0.120
	1 1/16	1.42	5/16	12		0.303	0.268	0.266	0.264	0.262	0.260	0.255	0.251	0.247	0.150
	1 1/8	1.50	3/8	12		0.365	0.331	0.329	0.326	0.324	0.322	0.318	0.314	0.309	0.185
7/8	1 3/32	1.25	7/32	12	0.885	0.209	0.175	0.173	0.171	0.170	0.168	0.164	0.160	0.157	0.105
	1 1/8	1.29	1/4	12		0.240	0.206	0.205	0.203	0.201	0.199	0.195	0.192	0.188	0.120
	1 3/16	1.36	5/16	10		0.303	0.269	0.267	0.265	0.263	0.262	0.258	0.254	0.251	0.150
	1 1/4	1.43	3/8	10		0.365	0.331	0.330	0.328	0.326	0.324	0.320	0.317	0.313	0.185
1	1 1/4	1.25	1/4	10	1.012	0.238	0.205	0.203	0.202	0.200	0.198	0.195	0.192	0.189	0.120
	1 5/16	1.31	5/16	9		0.301	0.267	0.266	0.264	0.263	0.261	0.258	0.255	0.251	0.150
	1 3/8	1.38	3/8	9		0.363	0.330	0.328	0.327	0.325	0.323	0.320	0.317	0.314	0.185
1 1/4	1 9/16	1.25	5/16	9	1.264	0.299	0.266	0.265	0.263	0.262	0.261	0.258	0.256	0.253	0.150
1 1/2	1 7/8	1.25	3/8	8	1.518	0.357	0.325	0.324	0.323	0.322	0.321	0.318	0.316	0.314	0.180
2	2 1/2	1.25	1/2	6	2.022	0.478	-	0.446	0.445	0.444	0.443	0.442	0.440	0.438	0.250
2 1/2	3 1/8	1.25	5/8	6	2.528	0.597	-	0.565	0.564	0.564	0.563	0.562	0.561	0.559	0.300
3	3 3/4	1.25	3/4	6	3.033	0.717	-	0.685	0.685	0.684	0.684	0.683	0.682	0.681	0.350

Notes: The above table of minimum standard ligaments is based on a ligament tolerance not exceeding the sum of twice the drill drift tolerance plus 0.020" for tubes less than 5/8" OD and 0.030" for tubes 5/8" OD and larger.
Drill drift tolerance = 0.0016 (thickness of tubesheet in tube diameters), in.

* For tubesheet thicknesses greater than 6", it is permissible to determine minimum standard ligaments according to the note above.

 ©Tubular Exchanger Manufacturers Association, Inc.

TABLE RCB-7.2.2M

TABLE OF TUBESHEET LIGAMENTS AND RECOMMENDED HEAVIEST TUBE GAGES

(All Dimensions in mm)

Tube Dia d_o	Tube Pitch p	p/d_o	$p - d_o$	Heaviest Recom-mended Tube Gage BWG	Tube Hole Dia. Std. Fit	Nominal Liga-ment Width	Minimum Std. Ligaments (96% of ligaments must equal or exceed values tabulated below) Tubesheet Thickness								Minimum Permissible Ligament Width
							25.4	38.1	50.8	63.5	76.2	101.6	127.0	152.4	
6.4	7.94	1.25	1.59	22	6.579	1.372	0.635	0.635	0.635	0.635	-	-	-	-	0.635
	9.53	1.50	3.18	20		2.946	2.108	1.956	1.778	1.626	-	-	-	-	1.524
9.5	11.51	1.21	1.98	20	9.754	1.753	1.041	0.914	0.813	0.711	0.610	-	-	-	0.762
	12.70	1.33	3.18	18		2.946	2.210	2.108	2.007	1.905	1.778	1.575	-	-	1.524
	13.49	1.42	3.97	18		3.734	3.023	2.896	2.794	2.692	2.591	2.362	2.159	1.930	1.905
12.7	15.88	1.25	3.18	18	12.954	2.921	2.261	2.159	2.083	2.007	1.930	1.753	1.600	-	1.524
	16.67	1.31	3.97	16		3.708	3.048	2.972	2.870	2.794	2.718	2.565	2.388	2.235	1.905
	17.46	1.38	4.76	16		4.521	3.835	3.759	3.683	3.607	3.505	3.353	3.200	3.023	2.286
15.9	19.05	1.20	3.18	16	16.129	2.921	2.032	1.956	1.905	1.829	1.778	1.651	1.499	1.372	1.524
	19.84	1.25	3.97	15		3.708	2.819	2.769	2.692	2.616	2.565	2.438	2.311	2.184	1.905
	20.64	1.30	4.76	14		4.521	3.607	3.556	3.480	3.429	3.353	3.226	3.099	2.972	2.286
	22.23	1.40	6.35	14		6.096	5.207	5.131	5.080	5.004	4.953	4.801	4.674	4.547	3.048
19.1	23.81	1.25	4.76	13	19.304	4.521	3.632	3.581	3.531	3.480	3.429	3.302	3.200	3.099	2.286
	25.40	1.33	6.35	12		6.096	5.232	5.182	5.105	5.055	5.004	4.902	4.801	4.674	3.048
	26.99	1.42	7.94	12		7.696	6.807	6.756	6.706	6.655	6.604	6.477	6.375	6.274	3.810
	28.58	1.50	9.53	12		9.271	8.407	8.357	8.280	8.230	8.179	8.077	7.976	7.849	4.699
22.2	27.78	1.25	5.56	12	22.479	5.309	4.445	4.394	4.343	4.318	4.267	4.166	4.064	3.988	2.667
	28.58	1.29	6.35	12		6.096	5.232	5.207	5.156	5.105	5.055	4.953	4.877	4.775	3.048
	30.16	1.36	7.94	10		7.696	6.833	6.782	6.731	6.680	6.655	6.553	6.452	6.375	3.810
	31.75	1.43	9.53	10		9.271	8.407	8.382	8.331	8.280	8.230	8.128	8.052	7.950	4.699
25.4	31.75	1.25	6.35	10	25.705	6.045	5.207	5.156	5.131	5.080	5.029	4.953	4.877	4.801	3.048
	33.34	1.31	7.94	9		7.645	6.782	6.756	6.706	6.680	6.629	6.553	6.477	6.375	3.810
	34.93	1.38	9.53	9		9.220	8.382	8.331	8.306	8.255	8.204	8.128	8.052	7.976	4.699
31.8	39.69	1.25	7.94	9	32.106	7.595	6.756	6.731	6.680	6.655	6.629	6.553	6.502	6.426	3.810
38.1	47.63	1.25	9.53	8	38.557	9.068	8.255	8.230	8.204	8.179	8.153	8.077	8.026	7.976	4.572
50.8	63.50	1.25	12.70	6	51.359	12.141	-	11.328	11.303	11.278	11.252	11.227	11.176	11.125	6.350
63.5	79.38	1.25	15.88	6	64.211	15.164	-	14.35	14.34	14.32	14.304	14.27	14.24	14.21	7.62
76.2	95.25	1.25	19.05	6	77.038	18.212	-	17.41	17.4	17.38	17.369	17.34	17.31	17.29	8.89

Notes: The above table of minimum standard ligaments is based on a ligament tolerance not exceeding the sum of twice the drill drift tolerance plus 0.51 mm for tubes less than 15.9 mm OD and 0.76 mm for tubes 15.9 mm OD and larger.
Drill drift tolerance = 0.041 (thickness of tubesheet in tube diameters), mm

* For tubesheet thicknesses greater than 152.4 mm, it is permissible to determine minimum standard ligaments according to the note above.

*RCB-7.2.3 TUBE HOLE FINISH

The inside edges of tube holes in tubesheets shall be free of burrs to prevent cutting of the tubes. Internal surfaces shall be given a workmanlike finish.

RB-7.2.4 TUBE HOLE GROOVING

Tube holes for expanded joints for tubes 5/8" (15.9 mm) OD and larger shall be machined with annular ring groove(s) for additional longitudinal load resistance. For strength welded tube to tubesheet joints, ring grooves are not required.

(1) For roller expanded tube joints, when tubesheet thickness exceeds 1" (25.4 mm) at least two grooves shall be used, each approximately 1/8" (3.2 mm) wide by 1/64" (0.4 mm) deep. Tubesheets with thickness less than or equal to 1" (25.4 mm) may be provided with one groove.

(2) For hydraulic or explosive expanded tube joints, at least one groove shall be used. Minimum groove width shall be calculated as $w = 1.56\sqrt{Rt}$ where R = mean tube radius and t = tube wall thickness, except groove width need not exceed 1/2" (12.7 mm). Groove depth shall be at least 1/64" (0.4 mm).

When integrally clad or applied tubesheet facings are used, all grooves should be in the base material unless otherwise specified by the purchaser. Other groove configurations may be used based on the exchanger manufacturer's experience or the recommendations of the expansion equipment manufacturer.

 ©Tubular Exchanger Manufacturers Association, Inc.

C-7.2.4 TUBE HOLE GROOVING

For design pressures over 300 psi (2068 kPa) and/or temperatures in excess of 350 °F (177 °C), the tube holes for expanded joints for tubes 5/8" (15.9 mm) OD and larger shall be machined with annular ring groove(s) for additional longitudinal load resistance. For strength welded tube to tubesheet joints, ring grooves are not required.

(1) For roller expanded tube joints, when tubesheet thickness exceeds 1" (25.4 mm), at least two grooves shall be used, each approximately 1/8" (3.2 mm) wide by 1/64" (0.4 mm) deep. Tubesheets with thickness less than or equal to 1" (25.4 mm) may be provided with one groove.

(2) For hydraulic or explosive expanded tube joints, at least one groove shall be used. Minimum groove width shall be calculated as $w = 1.56\sqrt{Rt}$ where R = mean tube radius and t = tube wall thickness, except groove width need not exceed 1/2" (12.7 mm). Groove depth to be at least 1/64" (0.4 mm).

When integrally clad or applied tubesheet facings are used, all grooves should be in the base material unless otherwise specified by the purchaser. Other groove configurations may be used based on the exchanger manufacturer's experience or the recommendations of the expansion equipment manufacturer.

*RCB-7.3 TUBE-TO-TUBESHEET JOINTS

RCB-7.3.1 EXPANDED TUBE-TO-TUBESHEET JOINTS

A torque controlled roller expander is generally used to make a pressure tight seal between the tubes and tubesheet by expanding the tubes tightly against the inside of the tubesheet hole. The tube is expanded until a certain amount of wall reduction is obtained in the tube. Different tubing materials require different amounts of expansion in order to seal. The amount of wall reduction is set by adjusting the torque on the expander to stop when the target reduction is achieved. The first few tubes and tube holes must be measured to determine the target torque for the required wall reduction. Remaining tubes should be spot checked with measurements to verify torque settings.

Suggested amounts of wall reduction by tubing material are as follows:

Tubing Material	Target Percent Wall Reduction
Carbon steel and low alloy steel	5 to 8
Stainless steel	5 to 8
Duplex stainless steel	4 to 6
Titanium and work hardening non-ferrous	4 to 6
Admiralty and non-work hardening non-ferrous	6 to 9
Copper and copper alloys	7 to 10

These suggested amounts are based on industry standards. The optimal amount of expansion could vary from these amounts, and should be agreed upon between the owner and manufacturer. Higher pin-count expanders should be considered for titanium tubes when size permits. Please see RGP-RCB-7.3 for factors that may affect the optimum amount of wall reduction.

Other methods for tube expansion include hydraulic and explosive expansion. Procedures, acceptance criteria, and verification for these methods are to be agreed upon between the manufacturer and owner.

The target tube inside diameter after expansion can be calculated as follows:
ID of rolled tube = (ID tubesheet hole – OD tube) + ID tube + (2 x tube thk.) x (% wall reduction).

RB-7.3.1.1 LENGTH OF EXPANSION

Tubes shall be expanded into the tubesheet for a length no less than 2" (50.8 mm) or the tubesheet thickness minus 1/8" (3.2 mm), whichever is smaller. In no case shall the expanded portion extend beyond the shell side face of the tubesheet. When specified by the purchaser, tubes may be expanded for the full thickness of the tubesheet.

 ©Tubular Exchanger Manufacturers Association, Inc.

C-7.3.1.1 LENGTH OF EXPANSION

Tubes shall be expanded into the tubesheet for a length no less than two tube diameters, 2" (50.8 mm), or the tubesheet thickness minus 1/8" (3.2 mm), whichever is smaller. In no case shall the expanded portion extend beyond the shell side face of the tubesheet. When specified by the purchaser, tubes may be expanded for the full thickness of the tubesheet.

RCB-7.3.1.2 CONTOUR OF THE EXPANDED TUBE

The expanding procedure shall be such as to provide substantially uniform expansion throughout the expanded portion of the tube, without a sharp transition to the unexpanded portion.

RCB-7.3.1.3 TUBE PROJECTION

Tubes shall be flush with or extend by no more than one half of a tube diameter beyond the face of each tubesheet, except that tubes shall be flush with the top tubesheet in vertical exchangers to facilitate drainage unless otherwise specified by the purchaser.

RCB-7.3.2 WELDED TUBE-TO-TUBESHEET JOINTS

When both tubes and tubesheets, or tubesheet facing, are of suitable materials, the tube joints may be welded.

RCB-7.3.2.1 SEAL WELDED JOINTS

When welded tube joints are used for additional leak tightness only, and tube loads are carried by the expanded joint, the tube joints shall be subject to the rules of Paragraphs RCB-7.2 through RCB-7.3.1, except consideration may be given to modification of Paragraph RB-7.3.1.1 or C-7.3.1.1.

RCB-7.3.2.2 STRENGTH WELDED JOINTS

When welded tube joints are used to carry the longitudinal tube loads, consideration may be given to modification of the requirements of Paragraphs RCB-7.2 through RCB-7.3.1. Minimum tubesheet thicknesses shown in Paragraph R-7.1.1, C-7.1.1 or B-7.1.1 do not apply.

RCB-7.3.2.3 FABRICATION AND TESTING PROCEDURES

Welding procedures and testing techniques for either seal welded or strength welded tube joints shall be by agreement between the manufacturer and the purchaser.

RCB-7.3.3 EXPLOSIVE BONDED TUBE-TO-TUBESHEET JOINTS

Explosive bonding and/or explosive expanding may be used to attach tubes to the tubesheets where appropriate. Consideration should be given to modifying the relevant parameters (e.g., tube-to-tubesheet hole clearances and ligament widths) to obtain an effective joint.

 ©Tubular Exchanger Manufacturers Association, Inc.

R-7.4 TUBESHEET PASS PARTITION GROOVES

Tubesheets shall be provided with approximately 3/16" (4.8 mm) deep grooves for pass partition gaskets.

CB-7.4 TUBESHEET PASS PARTITION GROOVES

For design pressures over 300 psi (2068 kPa), tubesheets shall be provided with pass partition grooves approximately 3/16" (4.8 mm) deep, or other suitable means for retaining the gaskets in place.

RCB-7.5 TUBESHEET PULLING EYES

In exchangers with removable tube bundles having a nominal diameter exceeding 12" (305 mm) and/or a tube length exceeding 96" (2438 mm), the stationary tubesheet shall be provided with two tapped holes in its face for pulling eyes. These holes shall be protected in service by plugs of compatible material. Provision for means of pulling may have to be modified or waived for special construction, such as clad tubesheets or manufacturer's standard, by agreement between the manufacturer and the purchaser.

RB-7.6 CLAD AND FACED TUBESHEETS

The nominal cladding thickness at the tube side face of a tubesheet shall not be less than 5/16" (7.8 mm) when tubes are expanded only, and 1/8" (3.2 mm) when tubes are welded to the tubesheet. The nominal cladding thickness on the shell side face shall not be less than 3/8" (9.5 mm). Clad surfaces, other than in the area into which tubes are expanded, shall have at least 1/8" (3.2 mm) nominal thickness of cladding.

C-7.6 CLAD AND FACED TUBESHEETS

The nominal cladding thickness at the tube side face of a tubesheet shall not be less than 3/16" (4.8 mm) when tubes are expanded only, and 1/8" (3.2 mm) when tubes are welded to the tubesheet. The nominal cladding thickness on the shell side face shall not be less than 3/8" (9.5 mm). Clad surfaces, other than in the area into which tubes are expanded, shall have at least 1/8" (3.2 mm) nominal thickness of cladding.

 ©Tubular Exchanger Manufacturers Association, Inc.

RCB-8 FLEXIBLE SHELL ELEMENTS (FSE)

This section shall apply to fixed tubesheet exchangers that require flexible elements to reduce shell and tube longitudinal stresses and/or tube-to-tubesheet joint loads. Light gauge bellows type expansion joints within the scope of the Standards of the Expansion Joint Manufacturers Association (EJMA) or the Code are not included within the scope of this section. Flanged-only, flanged-and-flued, flued-only and corner-corner types of expansion joints, as shown in Figure RCB-8.2 are examples of flexible shell element (FSE) combinations. The designer shall consider the most adverse operating conditions specified by the purchaser. (See Paragraph E-3.2.)

This section provides rules and guidelines for determining the spring rate and stresses using axisymmetric finite element model (FEA) methods for the FSEs or combinations of FSEs. Both two-dimensional axisymmetric solid and one-dimensional axisymmetric (line element) FEA methods are discussed. Other FEA methods, such as those that use plate-and-shell elements or three-dimensional solid elements, are permissible, providing that these follow the analysis sequence described herein; however, specific rules and guidelines for model development are not provided.

Historic calculation methods for flexible shell elements were based on classical analysis using either plate or beam theory. Classical theory utilized square joints between annular and cylindrical components of the flexible element. To account for knuckles between components, modifying parameters were incorporated into calculations and verified by comparison with experimental measurements of stress and force.
While these historic calculation methods have been used for over 50 years, modern engineering tools and methods provide for a more accurate analysis of a flexible shell element. Modern tools allow the designer to model actual geometries and directly calculate stiffness and stresses associated with a specified geometry. The need to utilize curves and correction factors to mimic experimental results is no longer necessary or appropriate.

The finite element method has been adopted for the design of flexible elements due to the limitations of plate and beam theory utilized on the S. Kopp and M.F. Sayer equivalent geometry. These limitations not only result in an incomplete analysis, they also result in overestimated stresses at the knuckle to annular plate discontinuity. This results in increased thickness, thus stiffness of the flexible element, which counteracts the FSE's purpose. The flexible element lends itself nicely to finite element design due to the geometry and the axisymmetric shape. In addition, well defined boundary conditions and loading conditions promote uniform results. The classical plate and beam theory used for flexible elements does not predict a state of stress at the knuckles or corners of the flexible element and no reliable analytical method to evaluate stress at the knuckle and knuckle to annular plate junction exists.

The intent is to provide an approach whereby reproducible results can be obtained regardless of the finite element method or the computer program used. The paragraphs that follow provide the guidelines and methods of modeling techniques and interpretation that allow standardized results. These techniques are based on research and knowledge for this type of geometry and FEA analysis. In some cases an accepted approach can be specified to the exclusion of another, and in other cases modeling methods can be recommended that could be readily improved. In all these cases the objective is to provide a lowest common denominator whereby any finite element user could produce similar, reasonable and accurate results with a minimum amount of effort and expertise. The overall analytical goal is to provide a level of accuracy superior to the shell theory solutions typified in the method of Kopp and Sayer and other analytical methods. The benefit derived from this use is that much experience with bending and membrane stresses of this type exists. Use of the finite element method is advantageous since that level of experience can now be confidently used with all geometries.

 ©Tubular Exchanger Manufacturers Association, Inc.

RCB-8.1 ASSUMPTIONS, LIMITATIONS AND SEQUENCE

The analysis contained in the following paragraphs is applicable based upon the following assumptions:

(1) Applied loadings are axial.

(2) Torsional loads are negligible.

(3) There is no consideration of stresses due to thermal gradients or mechanical/thermal transients.

(4) The flexible elements are sufficiently thick to avoid instability.

(5) The flexible elements are axisymmetric.

(6) Material is isotropic and the response is linearly elastic.

The analysis involves the following fundamental methodologies:

(1) The FEA model simulates the entire shell and FSE system from tubesheet to tubesheet.

(2) The spring rate of the FSE is determined through the application of a unit axial force to the FEA model.

(3) The spring rate and FSE dimensions are used as inputs to the tubesheet analysis method (See Section RCB-7.) The method used must consider the flexibility of the whole FSE, shell, tubesheet and tube system and must produce as an output the displacement over the whole shell length for each loading condition.

(4) The displacements from the tubesheet analysis are used as inputs to the FEA model of the FSE for each loading condition. These displacements model the effects of the tubesheet and tubes.

(5) The shell thermal expansion is not included as an input to the FEA model of the FSE. Therefore, the displacements from the tubesheet analysis <u>must not include</u> the thermal expansion displacement term, usually expressed as $L\alpha_{s,m}(T_{s,m} - T_a)$, where $T_{s,m}$ is the shell mean temperature, T_a is the ambient temperature and $\alpha_{s,m}$ is the mean coefficient of thermal expansion of the shell at $T_{s,m}$. However, the effect of the differential expansion between the shell and tubes, usually factored into the shell axial stress term, <u>must be included</u> for the operating load cases.

(6) The shell side pressure is also an input to the FEA model of the FSE, according to each loading condition.

(7) The method is assumed to be iterative; starting from an assumed geometry, the design is adjusted until the stresses in both the tubesheet and the FSE analyses meet Code.

RCB-8.1.1 ANALYSIS SEQUENCE

The sequence of the analysis shall be as follows:

(1) Select a geometry for the flexible element per Paragraph RCB-8.2.

(2) Construct the FEA model per Paragraph RCB-8.3.

(3) Apply the axial load for spring rate analysis per Paragraph RCB-8.4.

(4) Perform FEA for displacement and determine spring rate.

(5) Using a tubesheet analysis method, determine the induced axial displacements as required for the loading conditions.

(6) Apply appropriate loads and displacements to the model per Paragraph RCB-8.5.

(7) Perform FEA to determine stresses.

(8) Compute the membrane and bending stresses along *Stress Classification Lines* per Paragraph RCB-8.6.

(9) If necessary, perform a fatigue analysis per Paragraph RCB-8.7.

(10) Compare the flexible element stresses to the appropriate allowable stresses per the Code for all applicable load conditions.

(11) Repeat steps 1 through 10 as necessary.

 ©Tubular Exchanger Manufacturers Association, Inc.

RCB-8.1.2 CORROSION ALLOWANCE

The shell flexible elements shall be analyzed in both the corroded and uncorroded conditions.

RCB-8.1.3 DIMENSIONAL VARIANCES

The FSE is analyzed using an idealized model, as is the case with other heat exchanger components. There will be fabrication and material tolerances that will cause the actual FSE to slightly differ from the idealized model. The designer shall determine if these deviations from the as ordered condition warrant additional design analysis.

RCB-8.2 GEOMETRY DEFINITION

The geometry may be made up of any combination of cylinders and annular plates with or without knuckle radii at their junctions.

Figure RCB-8.2 defines the nomenclature used in the following paragraphs based upon nominal dimensions of the flexible elements.

FIGURE RCB-8.2

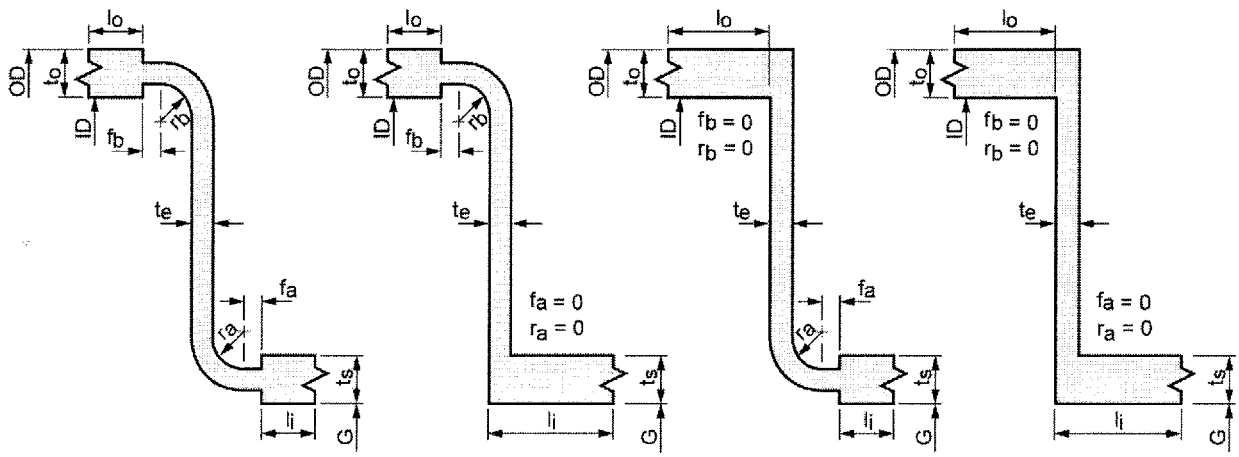

where

l_o and l_i are the lengths of the cylinders welded to single flexible shell elements.

When two flexible shell elements are joined with a cylinder, the applicable cylinder length, l_o or l_i used for calculation with the FSE shall be half the actual cylinder length. The cylinder length, l_i shall not be less than $3.6\sqrt{Gt_s}$. These procedures assume that the FSE is far removed from any gross discontinuities. The minimum length of $3.6\sqrt{Gt_s}$ assures that there is no interaction of boundary conditions with the FSE.

RCB-8.3 FEA MODELING

This section describes the type of mesh and mesh elements that shall be used in the FSE model. Using the guidelines below will assure that an adequate number and type of elements are used and that they are strategically placed for the stress evaluation process. The following type of meshing mitigates issues of extrapolation of stresses and resulting high stresses in geometry due to discontinuities, through the numerical integration process along clearly defined elements. Meshes may be developed using either two-dimensional axisymmetric solid elements or using line elements.

Creating an FEA model using two-dimensional axisymmetric solid elements is described in Section RCB-8.3.3. Creating an FEA model using line elements is described in Section RCB-8.3.4. Both are axisymmetric models, as described in RCB-8.3.1 and both are subject to the boundary and loading conditions as described in Section RCB-8.3.2. Note that models for both the corroded and uncorroded condition shall be created.

 ©Tubular Exchanger Manufacturers Association, Inc.

RCB-8.3.1 AXISYMMETRIC MODEL

FSEs are readily modeled using axisymmetric elements, as both the geometry and the loading are axisymmetric. The symmetry about one axis results in all deformations and stresses to be independent of a rotational angle, θ. Reference Figures RCB-8.3.1.1 and RCB-8.3.1.2.

FIGURE RCB-8.3.1.1

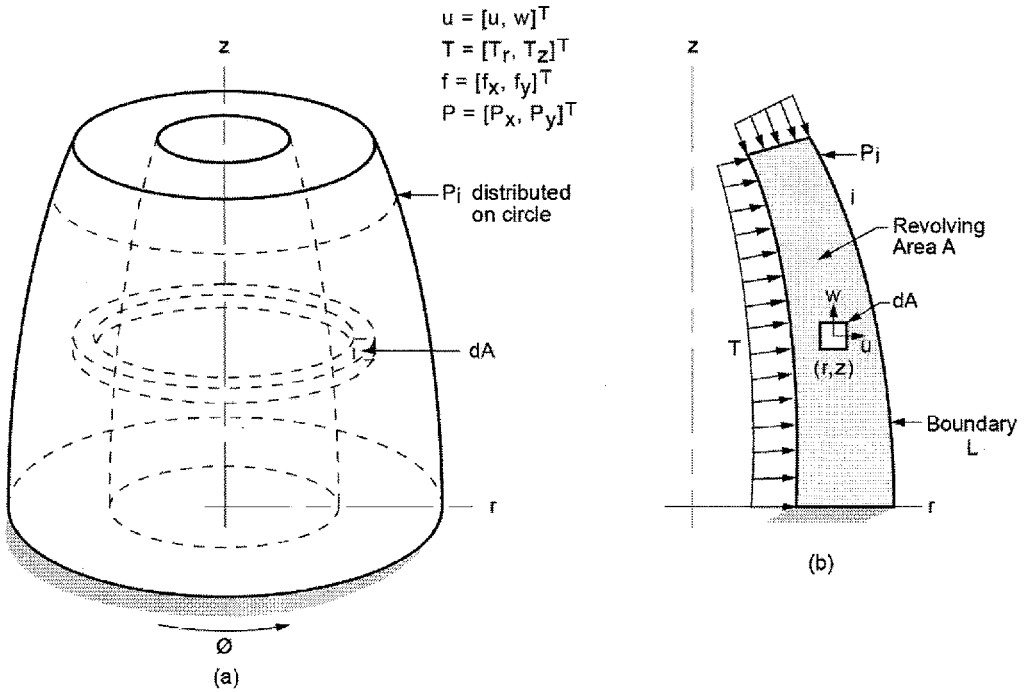

FIGURE RCB-8.3.1.2

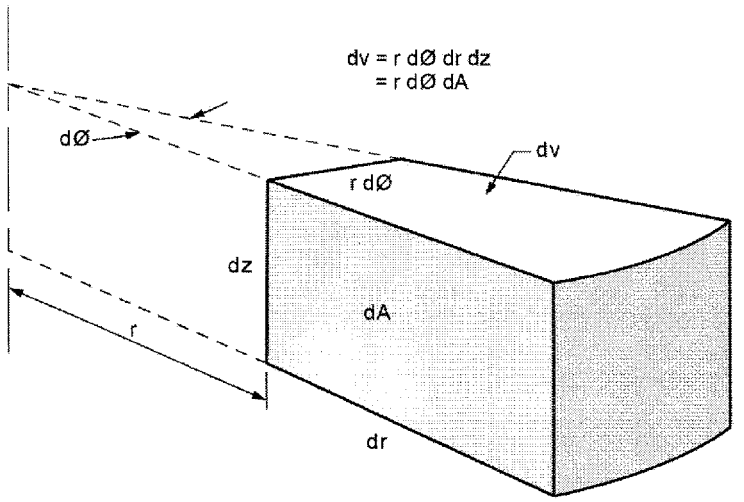

 ©Tubular Exchanger Manufacturers Association, Inc.

RCB-8.3.2 BOUNDARY AND LOADING CONDITIONS

The FEA model of the FSE shall be modeled using half-length symmetry, as shown in Figure RCB-8.3.2. As long as the shell length between the FSE and either tubesheet is greater than required by RCB-8.2, it may be modeled as being centered on the half-length centerline, regardless of its exact location. The modeled length (l_{model}) shall be:

$$l_{model} = \frac{L}{2}$$

where:

L = length of the shell between the inside faces of the tubesheets

When more than one identical flexible shell element is used, the following considerations are required:

(1) If the shell length between the flexible shell elements is greater than $3.6\sqrt{D_s t_s}$, then the modeled length (l_{model}) as shown in Figure RCB-8.42 shall be:

$$l_{model} = \frac{L}{2N_{FSE}}$$

where:

N_{FSE} = total number of FSEs

(2) If the shell length between the flexible shell elements is less than $3.6\sqrt{D_s t_s}$, then the designer shall construct the model to consider this proximity. Description of this is beyond the scope of this section.

If multiple non-identical flexible shell elements are used, it is left to the designer to appropriately model each FSE and to apportion the tubesheet displacements to each.

The following boundary conditions shall apply:

(1) The small diameter end shall be unrestrained in the axial direction.

(2) The large diameter end shall be restrained in the axial direction.

The following loading conditions shall apply:

(1) The unit force for spring rate determination shall be applied at the small diameter.

(2) The displacements for stress determination shall be applied at the small diameter.

(3) The shell side pressure shall be applied to the whole shell and FSE surface.

One modeling technique to apply axial loads and displacements is to construct a solid end cap as shown in Figure RCB-8.3.2.

FIGURE RCB-8.3.2

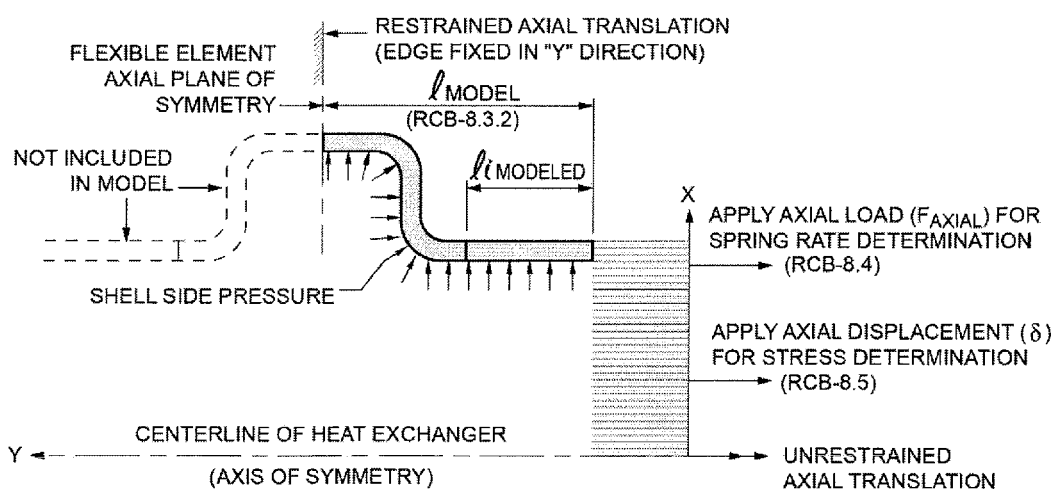

RCB-8.3.3 FEA MODEL USING 2-D AXISYMMETRIC SOLID ELEMENTS

Two-dimensional axisymmetric solid elements represent shapes of revolution based on the revolved cross section. These are solid elements with a parametric formulation that models the hoop stress. The FEA model shall be developed using eight-noded quadratic axisymmetric elements as shown in Figure RCB-8.3.3.

FIGURE RCB-8.3.3

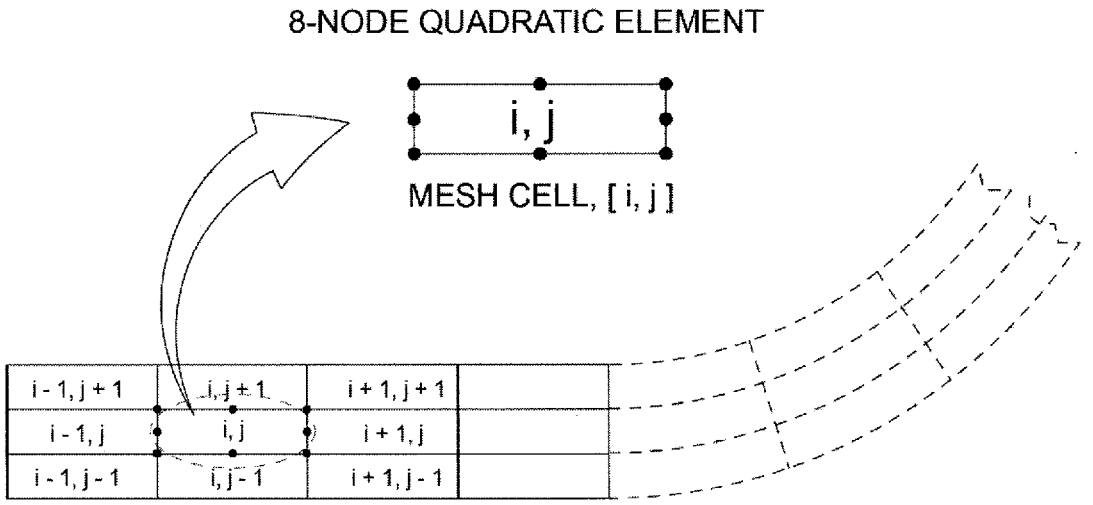

RCB-8.3.3.1 STRUCTURED MESH

The mesh developed for the FSE shall be a structured mesh. A structured mesh is one in which the mesh connectivity is such that each mesh cell shares a face with adjacent mesh cells. In other words, mesh cell (i,j) shares a face with cell (i+1,j), cell (i-1,j), cell (i,j+1) and cell (i,j-1). The mesh shall be organized along clear geometric breakdowns of the geometry and the element edges shall follow a straight line from one free surface to another along what shall be used as a Stress Classification Line (SCL) for output processing. Reference Figure RCB-8.3.3. Note that the SCLs for each joint type are shown in Figure RCB-8.6.2.

RCB-8.3.3.2 MESH DENSITY

In general, the mesh shall be developed using four to six quadratic displacement elements through the thickness. Often only two quadratic displacement elements are required through the thickness to get a reasonable estimate of the membrane and bending stresses.

Elements adjacent to stress classification lines (SCLs) should have aspect ratios no greater than two, or should have their axial length no greater than 0.25 (t), where (t) is the thickness at the stress classification line.

 ©Tubular Exchanger Manufacturers Association, Inc.

RCB-8.3.4 FEA MODEL USING LINE ELEMENTS

Line elements are axisymmetric shell elements that represent shapes of revolution based on the centerline of the revolved shape and its thickness. These are mid-surface elements that may have linear, quadratic or cubic shape functions with two to four nodes per element. Where linear elements are used, the element lengths adjacent to discontinuities should be no greater than $1/4\sqrt{RT}$. Where cubic elements are used, the element length adjacent to discontinuities should be no greater than $\sqrt{RT}$. Nodal results need only be evaluated at the stress classification lines identified in Figure RCB-8.6.2. A four-noded element is shown in Figure RCB-8.3.4.

FIGURE RCB-8.3.4

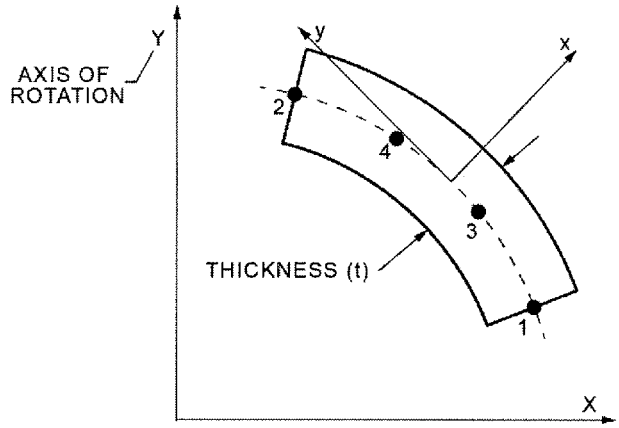

RCB-8.3.4.1 NODE PLACEMENT

The elements shall be organized along clear geometric breakdowns of the geometry and end nodes (nodes 1 and 2 in Figure RCB-8.3.4) shall be placed on the Stress Classification Line (SCL) for output processing. Note that the SCLs for each joint type are shown in Figure RCB-8.6.2.

RCB-8.3.4.2 MESH DENSITY

The spacing of the end nodes adjacent to stress classification lines (SCLs) shall be sufficiently fine so as to produce accurate stress results. Particular care shall be taken in the vicinity of discontinuities such as perpendicular corners and thickness changes.

 ©Tubular Exchanger Manufacturers Association, Inc.

RCB-8.4 DETERMINATION OF SPRING RATE

The flexible element spring rate shall be determined as follows:

(1) The FSE shall be modeled and meshed as described in RCB-8.3.

(2) An axial load shall be applied at the small end diameter, as described in RCB-8.3.2. This load shall be equal to:

$$F_{AXIAL} = \frac{\pi}{4} G^2 100\text{psi} \text{ or } F_{AXIAL} = \frac{\pi}{4} G^2 1000\text{kPa}$$

(3) The FEA shall be performed and the displacement at the shell end in the axial direction, δ_{AXIAL}, shall be noted for the given applied force.

(4) The combined spring rate of the half-FSE and shell, as modeled shall be:

$$K_{AS} = \frac{F_{AXIAL}}{\delta_{AXIAL}}$$

(5) The spring rate for one FSE, factoring out the effect of the modeled shell axial spring rate, is:

$$K_{FSE} = \frac{0.5}{\frac{1}{K_{AS}} - \frac{l_{i,model}}{\pi t_s (G + t_s) E_s}}$$

where:

G and t_s are as defined in RCB-8.2.

$l_{i,model}$ is the shell length, as modeled, see Figure RCB-8.3.2 (l_i is defined in RCB-8.2).

E_s is the shell modulus of elasticity used in the model.

(6) When only one FSE is present, the spring rate $K_j = K_{FSE}$. When multiple identical FSEs are present, the spring rate is:

$$K_j = \frac{K_{FSE}}{N_{FSE}}$$

(7) Note that this procedure shall be performed on both the corroded and uncorroded condition models.

RCB-8.5 DETERMINATION OF STRESSES

The stresses in the flexible shell element shall be determined as follows:

(1) Using the FSE dimensions determined in RCB-8.2 and the spring rate determined in RCB-8.4, perform a tubesheet analysis as required by Code (RCB-7). The analysis method shall consider the flexibility of all components of the heat exchanger: tubes, tubesheets, shell and expansion joint.

(2) For each of the loading conditions required by the tubesheet analysis, determine the net displacement (Δ_s) over the full length of the shell between the inside faces of the tubesheets (L). As the FEA model described in this section does not include shell thermal growth (temperature and thermal expansion coefficients are not an input to the model), the thermal growth of the shell shall not be included in the calculation of Δ_s. This is usually expressed as $L\alpha_{s,m}(T_{s,m} - T_a)$. See Figure RCB-8.5 and Paragraph RCB-8.1.

 ©Tubular Exchanger Manufacturers Association, Inc.

(3) For each of the loading conditions, calculate the applied displacement ($\delta_{APPLIED}$) and apply as an input for the FEA model of the FSE, as constructed according the RCB-8.3. When one FSE is used, this is:

$$\delta_{APPLIED} = \frac{\Delta_s}{2}$$

When more than one identical flexible shell element is used, if the shell length between the flexible shell elements is greater than $3.6\sqrt{D_s t_s}$ and the FEA model is constructed per RCB-8.3.2.(1), then the applied displacement shall be:

$$\delta_{APPLIED} = \frac{\Delta_s}{2N_{FSE}}$$

When other configurations exist, such as multiple non-identical FSEs or closely spaced FSEs, the designer shall apportion the applied displacements as appropriate to the FEA model created.

(4) Shellside internal pressure shall be applied at the inside surface of the model as a surface pressure, according to the load case.

(5) The FEA shall be performed and the stresses at the SCLs per RCB-8.6 shall be noted for each load case.

(6) Note that this procedure shall be performed on both the corroded and uncorroded condition models with displacement inputs corresponding to each.

FIGURE RCB-8.5

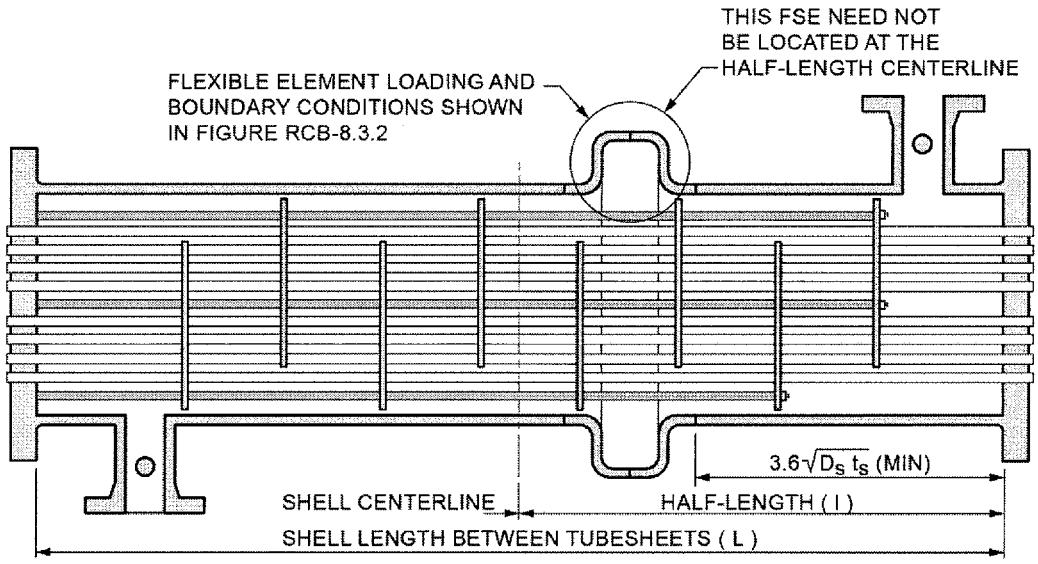

NET DISPLACEMENT (Δs)
$\delta_{APPLIED} = \Delta s / (2\ N_{FSE})$(APPLIED AXIAL DISPLACEMENT)
WHERE N_{FSE} = TOTAL NUMBER OF FLEXIBLE ELEMENTS (1 SHOWN)

RCB-8.6 STRESS EVALUATION

The stresses in the FSE and the adjacent cylindrical sections as determined by the FEA model in RCB-8.5 shall be evaluated against the allowable stresses of the Code. At a minimum, all of the locations defined by stress classification lines per RCB-8.6.2 shall be evaluated.

If the FEA model was created using two-dimensional axisymmetric solid elements per RCB-8.3.3, then the stress linearization procedures of RCB-8.6.1 shall be followed.

If the FEA model was created using line elements per RCB-8.3.4, then the membrane and bending stresses given as the output shall be directly evaluated per the Code.

If a fatigue evaluation is required, see RCB-8.7.

RCB-8.6.1 STRESS LINEARIZATION FOR TWO-DIMENSIONAL AXISYMMETRIC ELEMENTS

This section applies to stresses from an FEA model with two-dimensional axisymmetric solid elements. The FEA component stresses shall be separated through the FSE section into constant (membrane) and linear (bending) stresses. The stresses shall be linearized based upon computation of $\frac{P}{A}$ (membrane) and $\frac{6M}{t^2}$ (bending). Table RCB-8.6.1 defines the formulas involved for the stress linearization of quadratic elements for each type of stress and also the corresponding numerical integration as applicable, performed within a computer application. These are to be used in accordance with the guidelines of WRC Bulletin 429. Compute linearized membrane and membrane plus bending stress intensities at each SCL and in accordance with the recommendations of WRC 429. Element stresses shall not be averaged. Stresses for any SCL shall be taken from the elements on the thinnest side of any section where there is a change in thickness or direction.

 ©Tubular Exchanger Manufacturers Association, Inc.

TABLE RCB-8.6.1

TYPE OF STRESS	STRESS FORMULATION	NUMERICAL INTEGRATION
MEMBRANE		
AXIAL	$\sigma_y^m = (\frac{1}{R_c t}) \int_{-t/2}^{t/2} \sigma_y R dx$	$\sigma_y^m = \frac{1}{R_c(N-1)} (\frac{\sigma_{y,1} R_1}{2} + \frac{\sigma_{y,N} R_N}{2} + \sum_{j=2}^{N-1} \sigma_{y,j} R_j)$
RADIAL	$\sigma_x^m = (\frac{1}{t}) \int_{-\frac{t}{2}}^{\frac{t}{2}} \sigma_x dx$	$\sigma_x^m = \frac{1}{N-1} (\frac{\sigma_{x,1}}{2} + \frac{\sigma_{x,N}}{2} + \sum_{j=2}^{N-1} \sigma_{x,j})$
CIRCUMFERENTIAL	$\sigma_h^m = (\frac{1}{t}) \int_{-t/2}^{t/2} \sigma_h (1 + \frac{x}{\rho}) dx$	$\sigma_h^m = \frac{1}{N-1} (\frac{\sigma_{h,1}}{2} + \frac{\sigma_{h,N}}{2} + \sum_{j=2}^{N-1} (\sigma_{h,j} (1 + \frac{x_j}{\rho})))$
SHEAR	$\sigma_{xy}^m = \frac{1}{R_c t} \int_{-\frac{t}{2}}^{\frac{t}{2}} \sigma_{xy} R dx$	$\sigma_{xy}^m = \frac{1}{R_c(N-1)} (\frac{\sigma_{xy,1} R_1}{2} + \frac{\sigma_{xy,N} R_N}{2} + \sum_{j=2}^{N-1} \sigma_{xy,j} R_j)$

©Tubular Exchanger Manufacturers Association, Inc.

TABLE RCB-8.6.1 (Continued)

TYPE OF STRESS	STRESS FORMULATION	NUMERICAL INTEGRATION
BENDING		
AXIAL-NODE 1	$\sigma_{y1}^{b} = \dfrac{x_1 - x_f}{R_c t(\frac{t^2}{12} - x_f^2)} \int_{-\frac{t}{2}}^{\frac{t}{2}} (x - x_f)\sigma_y R dx$	$\sigma_{y1}^{b} = \dfrac{x_1 - x_f}{R_c(N-1)(\frac{(N-1)^2}{12} - x_f^2)} [\dfrac{\sigma_{y,1}}{2} + \dfrac{\sigma_{y,N}}{2} + \sum_{j=2}^{N-1}(x_j - x_f)\sigma_{y,j} R_j]$
AXIAL- NODE 2	$\sigma_{y2}^{b} = \dfrac{x_2 - x_f}{R_c t(\frac{t^2}{12} - x_f^2)} \int_{-\frac{t}{2}}^{\frac{t}{2}} (x - x_f)\sigma_y R dx$	$\sigma_{y2}^{b} = \dfrac{x_2 - x_f}{R_c(N-1)(\frac{(N-1)^2}{12} - x_f^2)} [\dfrac{\sigma_{y,1}}{2} + \dfrac{\sigma_{y,N}}{2} + \sum_{j=2}^{N-1}(x_j - x_f)\sigma_{y,j} R_j]$
RADIAL- NODE 1	$\sigma_{x1}^{b} = \sigma_{x,1} - \sigma_x^m$	$\sigma_{x1}^{b} = \sigma_{x,1} - \sigma_x^m$
RADIAL- NODE 2	$\sigma_{x2}^{b} = \sigma_{x,2} - \sigma_x^m$	$\sigma_{x2}^{b} = \sigma_{x,2} - \sigma_x^m$
CIRCUMFERENTIAL-NODE 1	$\sigma_{h1}^{b} = \dfrac{x_1 - x_h}{t(\frac{t^2}{12} - x_h^2)} \int_{-\frac{t}{2}}^{\frac{t}{2}} (x - x_h)\sigma_h (1 + \dfrac{x}{\rho}) dx$	$\sigma_{h1}^{b} = \dfrac{x_1 - x_h}{(N-1)(\frac{(N-1)^2}{12} - x_h^2)} [\dfrac{\sigma_{h,1}}{2} + \dfrac{\sigma_{h,N}}{2} + \sum_{j=2}^{N-1}(x - x_h)\sigma_{h,j}(1 + \dfrac{x_j}{\rho})$
CIRCUMFERENTIAL-NODE 2	$\sigma_{h2}^{b} = \dfrac{x_2 - x_h}{t(\frac{t^2}{12} - x_h^2)} \int_{-\frac{t}{2}}^{\frac{t}{2}} (x - x_h)\sigma_h (1 + \dfrac{x}{\rho}) dx$	$\sigma_{h2}^{b} = \dfrac{x_2 - x_h}{(N-1)(\frac{(N-1)^2}{12} - x_h^2)} [\dfrac{\sigma_{h,1}}{2} + \dfrac{\sigma_{h,N}}{2} + \sum_{j=2}^{N-1}(x - x_h)\sigma_{h,j}(1 + \dfrac{x_j}{\rho})$

©Tubular Exchanger Manufacturers Association, Inc.

Where

σ_y^m = axial membrane stress

σ_x^m = radial membrane stress

σ_h^m = circumferential membrane stress

σ_{xy}^m = shear membrane stress

σ_{y1}^b = axial bending stress at Node 1

σ_{y2}^b = axial bending stress at Node 2

σ_{x1}^b = radial bending stress at Node 1

σ_{x2}^b = radial bending stress at Node 2

σ_{h1}^b = circumferential bending stress at Node 1

σ_{h2}^b = circumferential bending stress at Node 2

$\sigma_{y,1}$ = total axial stress at Node 1

$\sigma_{y,j}$ = total axial stress at Node j

$\sigma_{y,N}$ = total axial stress at Node N

$\sigma_{x,1}$ = total radial stress at Node 1

$\sigma_{x,j}$ = total radial stress at Node j

$\sigma_{x,N}$ = total radial stress at Node 2

$\sigma_{h,1}$ = total circumferential stress at Node 1

$\sigma_{h,j}$ = total circumferential stress at Node j

$\sigma_{h,N}$ = total circumferential stress at Node N

$\sigma_{xy,1}$ = total shear stress at Node 1

$\sigma_{xy,j}$ = total shear stress at Node j

$\sigma_{xy,N}$ = total shear stress at Node N

σ_y = total stress in axial direction

σ_x = total stress in axial direction

σ_h = total stress in circumferential direction

σ_{xy} = total shear stress

 ©Tubular Exchanger Manufacturers Association, Inc.

N= number of nodes through thickness

R_1 = radius to Node 1

R_2 = radius to Node 2

$$R_c = \frac{R_1 + R_2}{2}$$

R = radius to point being integrated

R_N = radius to Node N

R_j = radius to Node j

t = thickness of FSE (N-1)

x_1 = x coordinate of Node 1

x_2 = x coordinate of Node 2

x_j = x coordinate of Node j

$$x_f = \frac{t^2 \cos\phi}{12 R_c}$$

$$x_h = \frac{t^2}{12\rho}$$

ϕ = angle as defined in Figure RCB-8.6.1

ρ = radius of curvature of the midsurface

FIGURE RCB-8.6.1

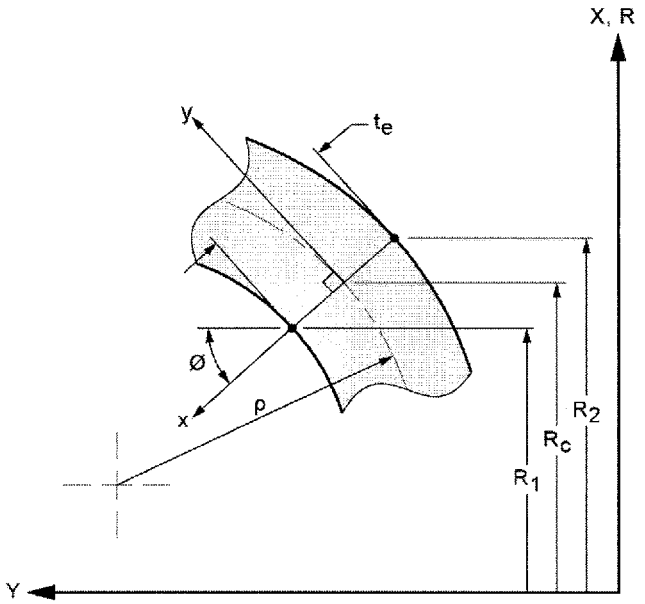

AXISYMMETRIC CROSS SECTION
USED FOR STRESS EVALUATION

REFERENCE GEOMETRY SHOWN IS FOR STRESS
CLASSIFICATION LINE O-J OF FIGURE RCB-8.6.2

 ©Tubular Exchanger Manufacturers Association, Inc.

RCB-8.6.2 REQUIRED STRESS CLASSIFICATION LINES

As a minimum, the following stress classification lines are required for the design and analysis of flexible elements. For line element FEA models, as no linearization is required, these are considered to be stress reporting locations.

Stress Classification Lines shall be placed at the following locations:

(1) Any change in model thickness that is not an artificial boundary condition, such as section *A-B* in Figure RCB 8-6.2. An example of an artificial boundary condition is the solid end cap as shown in Figure RCB-8.3.2.

(2) Any model boundary condition that represents a symmetric plane, such as at boundary *R-S* in Figure RCB-8.6.2.

(3) Any closed or open corner, such as sections *C-D* and *C-E* in Figure RCB-8.6.2.

(4) On either side of a curved section, such as sections *H-M* and *Q-L* in Figure RCB-8.6.2.

(5) At three equidistant points along any curved section removed from the ends, such as sections *N-I*, *O-J*, and *P-K* in Figure RCB-8.6.2.

(6) At the middle of any annular plate section, such as section *F-G* in Figure RCB-8.6.2.

FIGURE RCB-8.6.2

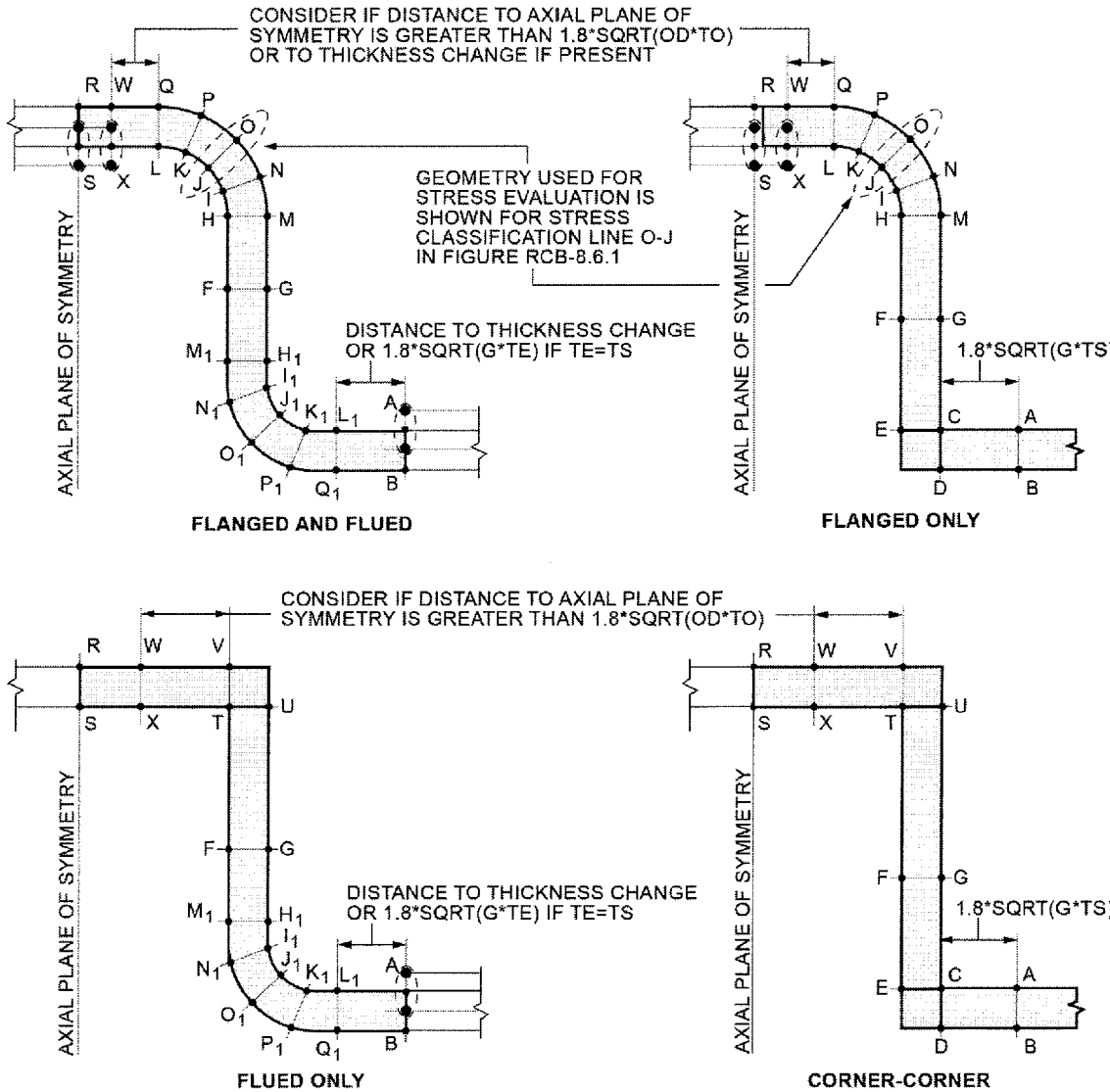

RCB-8.7 FATIGUE ANALYSIS (OPTIONAL)

When specified by the purchaser, a fatigue analysis shall be performed when an FSE is subject to cyclic operation. The fatigue analysis shall be in accordance with ASME Section VIII, Division 2 and is subject to the following restrictions:

(1) Where accessible, all welds in cyclic service shall have a minimum of VT and PT/MT inspection on 100% of both sides. When one or both sides are inaccessible, the Fatigue Strength Reduction Factor (FSRF) shall be in accordance with 4b.

(2) The smooth bar design fatigue curve for the material of construction shall be used.

(3) The design fatigue stress to be used with the design fatigue curve shall be the product of the linearized membrane plus bending stress and the FSRF.

(4) FSRF shall be determined as follows:

(a) For the inspection as defined in (1), the FSRF shall not be less than 1.7 for welded regions or 1.1 for unwelded regions of the FSE.

(b) The FSRF may be based on the weld type and inspection level in accordance with WRC 432 for each SCL evaluated, but in no case shall the FSRF be less than 1.1.

RCB-8.8 FEA METHODS

The design procedures and methods described in this section have been researched and verified for these specific geometries. Finite element models have been chosen to represent the possible FSE geometries and they have been examined using these procedures and testing has been performed in order to verify these procedures. It is recommended that these procedures are followed, however alternate FEA techniques may be employed if the following conditions are met:

(1) The FSE geometries are as described in RCB-8.2.

(2) The loading conditions are analyzed as described in RCB-8.3.

(3) The proper boundary conditions are applied for the FEA technique utilized.

(4) The membrane and bending stresses may be determined from the finite element stresses.

(5) The finite element analysis technique has been verified. If required, the purchaser shall accept the methods of verification.

(6) Results are consistent among various geometries.

RCB-8.8.1 COMPARISON OF TWO-DIMENSIONAL SOLID ELEMENTS AND LINE ELEMENTS

The designer shall determine which method is appropriate for any individual FSE geometry. The following are some significant differences between the two types of elements that may assist the designer in choosing an appropriate FEA element type.

(1) Two-dimensional solid elements and line elements both use an axisymmetric model for the FEA analysis. There will be less issues with meshing problems using lines elements rather than quadratic elements.

(2) Two-dimensional solid elements will be appropriate in any situation where a line element may be used.

(3) The eight-noded quadratic formulation of the two-dimensional solid element has more nodes and more complex shape functions than the three-noded quadratic formulation of the line element. Thus, it has a more complex displacement field which translates into more integration and calculations to perform than when using line elements; more computer processing power and computational/ modeling time is required.

(4) The line elements use thin-plate stress assumptions of linear bending and zero through-thickness stress. The two-dimensional solid element model does not, thus this approach will be more appropriate with FSE geometries that are relatively thick. The designer shall determine if line elements are appropriate to a particular geometry.

(5) The line element FEA technique can be performed in more compact programming, such as with macro enabled spreadsheets and results can be generated much faster than using quadratic elements.

 ©Tubular Exchanger Manufacturers Association, Inc.

RCB-8.9 REFERENCES

(1) ASME Section VIII, Division 2 2017 Edition

(2) Hechmer, J.L. and Hollinger, G.L., "3D Stress Criteria-Guidelines for Application", WRC Bulletin 429, February 1998

(3) Chandrupatla, T.R. and Belengundu, A.D., "Introduction to Finite Elements in Engineering", Prentice Hall, Second Edition (1997)

(4) Jaske, C.E., "Interpretive Review of Weld Fatigue-Strength-Reduction and Stress-Concentration Factors", WRC Bulletin 432, June 1998

(5) Hechmer, J.L., and Kuhn, E.J., "Fatigue-Strength-Reduction Factors for Welds Based on NDE", WRC Bulletin 432, June 1998

(6) Tony Paulin, Chris Hinnant and Fred Hendrix, Paulin Research Group, 1211 Richmond Ave., Suite 109, Houston, TX 77082, www.paulin.com

 ©Tubular Exchanger Manufacturers Association, Inc.

This page intentionally blank

 ©Tubular Exchanger Manufacturers Association, Inc.

RCB-9 CHANNELS, COVERS, AND BONNETS

RCB-9.1 CHANNELS AND BONNETS

R-9.1.1 MINIMUM THICKNESS OF CHANNELS AND BONNETS

Channel and bonnet thickness is determined by the Code design formulae, plus corrosion allowance, but in no case shall the nominal thickness of channels and bonnets be less than the minimum shell thicknesses shown in Table R-3.1.3. The nominal total thickness for clad channels and bonnets shall be the same as for carbon steel channels.

CB-9.1.1 MINIMUM THICKNESS OF CHANNELS AND BONNETS

Channel and bonnet thickness is determined by the Code design formulae, plus corrosion allowance, but in no case shall the nominal thickness of channels and bonnets be less than the minimum shell thicknesses shown in Table CB-3.1.3. The nominal total thickness for clad channels and bonnets shall be the same as for carbon steel channels.

RCB-9.1.2 MINIMUM INSIDE DEPTH

For multipass channels and bonnets the inside depth shall be such that the minimum cross-over area for flow between successive tube passes is at least equal to 1.3 times the flow area through the tubes of one pass. When an axial nozzle is used, the depth at the nozzle centerline shall be a minimum of one-third the inside diameter of the nozzle.

RCB-9.1.3 PASS PARTITION PLATES

RCB-9.1.3.1 MINIMUM THICKNESS

The thickness of pass partitions shall not be less than the greater of that shown in Table RCB-9.1.3.1 or calculated in Paragraph RCB-9.1.3.2. Pass partition plates may be tapered or step machined to gasket width at the contact surface.

TABLE RCB-9.1.3.1

NOMINAL PASS PARTITION PLATE THICKNESS
Dimensions are in Inches (mm)

Nominal Diameter	Carbon Steel	Alloy Material
Less than 24 (610)	3/8 (9.5)	1/4 (6.4)
24 to 60 (610-1524)	1/2 (12.7)	3/8 (9.5)
61 to 100 (1549-2540)	5/8 (15.9)	1/2 (12.7)

RCB-9.1.3.2 PASS PARTITION PLATE FORMULA

$$t = b\sqrt{\frac{qB}{1.5S}}$$

where

t = Minimum pass partition plate thickness, in. (mm)

B = Table value (linear interpolation may be used)

q = Pressure drop across plate, psi (kPa)

S = Code allowable stress in tension, at design metal temperature, psi (kPa)

b = Plate dimension. See Table RCB-9.1.3.2, in. (mm)

 ©Tubular Exchanger Manufacturers Association, Inc.

TABLE RCB-9.1.3.2

PASS PARTITION DIMENSION FACTORS

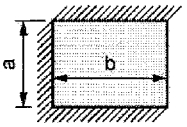 THREE SIDES FIXED ONE SIDE SIMPLY SUPPORTED		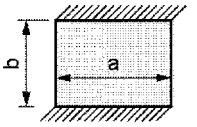 LONG SIDES FIXED SHORT SIDES SIMPLY SUPPORTED		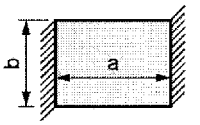 SHORT SIDES FIXED LONG SIDES SIMPLY SUPPORTED	
a/b	B	a/b	B	a/b	B
≤ 0.25	0.020	1.0	0.4182	1.0	0.4182
0.50	0.081	1.2	0.4626	1.2	0.5208
0.75	0.173	1.4	0.4860	1.4	0.5988
1.0	0.307	1.6	0.4968	1.6	0.6540
1.5	0.539	1.8	0.4971	1.8	0.6912
2.0	0.657	2.0	0.4973	2.0	0.7146
≥ 3.0	0.718	∞	0.5000	∞	0.7500

RCB-9.1.3.3 PASS PARTITION WELD SIZE

The pass partition plate shall be attached with fillet welds on each side with a minimum leg of 3/4 t from Paragraph RCB-9.1.3.2. Other types of attachments are allowed but shall be of equivalent strength.

RCB-9.1.3.4 SPECIAL PRECAUTIONS

Special consideration must be given to reinforcement or thickness requirements for internal partitions subjected to pulsating fluids, extreme differential pressures and/or temperatures, undue restraints or detrimental deflections under normal operating conditions or unusual start-up or maintenance conditions specified by the purchaser.

Vents and drains in tube side pass partition plates are recommended in order to provide adequate drainage and to minimize trapped air in chambers during hydro testing.

Consideration may also be given to special design configurations and/or methods of analysis which may justify reduction of pass partition plate thickness requirements.

Also, consideration should be given to potential bypass of tube side fluid where the pass partition might pull away from the gasket due to deflection.

RCB-9.1.4 POSTWELD HEAT TREATMENT

Fabricated channels and bonnets shall be postweld heat treated when required by the Code or specified by the purchaser.

RCB-9.2 FLAT CHANNEL COVER

RCB-9.2.1 FLAT CHANNEL COVER DEFLECTION - MULTIPASS UNITS

The effective thickness of a flat channel cover shall be the thickness at the bottom of the pass partition groove (or the face if there is no groove) minus corrosion allowance in excess of groove depth. The thickness is to be at least that required by the appropriate Code formula and thicker if required to meet proper deflection criteria.

The recommended limit for channel cover deflection is:

0.03" (0.8 mm) for nominal diameters thru 24" (610 mm)

0.125% of nominal diameter (nominal diameter/800) for larger sizes

A method for calculation of channel cover deflection is:

$$Y = \frac{G}{ET^3}(0.0435G^3P + 0.5S_BA_Bh_g)$$

where

$Y =$ Channel cover deflection at the center, inches (mm)

$G =$ Gasket load reaction diameter as defined by the Code, inches (mm)

 ©Tubular Exchanger Manufacturers Association, Inc.

$E =$ Modulus of elasticity at design temperature, psi (kPa)

$T =$ Thickness under consideration, inches (mm)

$P =$ Design pressure, psi (kPa)

$S_B =$ Allowable bolting stress at design temperature, psi (kPa)

$A_B =$ Actual total cross-sectional root area of bolts, square inches (mm^2)

$h_g =$ Radial distance from diameter G to bolt circle, inches (mm)

If the calculated deflection is greater than the recommended limit, the deflection may be reduced by acceptable methods such as:

Increase channel cover thickness by the cube root of the ratio of calculated deflection to the recommended limit.

Use of strong backs.

Change type of construction.

Note: For single pass channels, or others in which there is no pass partition gasket seal against the channel cover, no deflection criteria need be considered.

The recommended limit for channel cover deflection is intended to prevent excessive leakage between the cover and the pass partition plate. Many factors govern the choice of design deflection limits. Some of these factors are: number of tube side passes; tube side pressure drop; size of exchanger; elastic springback of gasket material; effect of interpass leakage on thermal performance; presence or absence of gasket retaining grooves; and leakage characteristics of the tube side fluid.
The method shown in Paragraph RCB-9.2.1 for calculating deflection does not consider:
(1) The restraint offered by the portion of the cover outside the gasket load reaction diameter.
(2) Additional restraint provided by some types of construction such as full face gasket controlled metal-to-metal contact, etc.
(3) Cover bow due to thermal gradient across the cover thickness.
The recommended cover deflection limits given in Paragraph RCB-9.2.1 may be modified if other calculation methods are used which accommodate the effect of reduced cover thickness on the exchanger performance.
Reference:
Singh, K.P. and Soler, A.I., "Mechanical Design of Heat Exchangers and Pressure Vessel Components", First Edition (1984), Chapter 12, Arcturus Publishers, Inc.

R-9.2.2 CHANNEL COVER PASS PARTITION GROOVES

Channel covers shall be provided with approximately 3/16" (4.8 mm) deep grooves for pass partitions. In clad or applied facings, all surfaces exposed to the fluid, including gasket seating surfaces, shall have at least 1/8" (3.2 mm) nominal thickness of cladding.

CB-9.2.2 CHANNEL COVER PASS PARTITION GROOVES

For design pressures over 300 psi (2068 kPa), channel covers shall be provided with approximately 3/16" (4.8 mm) deep grooves for pass partitions, or other suitable means for holding the gasket in place. In clad or applied facings, all surfaces exposed to fluid, including gasket seating surfaces, shall have at least 1/8" (3.2 mm) nominal thickness of cladding.

 ©Tubular Exchanger Manufacturers Association, Inc.

This page intentionally blank

©Tubular Exchanger Manufacturers Association, Inc.

RCB-10 NOZZLES

RCB-10.1 NOZZLE CONSTRUCTION

Nozzle construction shall be in accordance with Code requirements. Shell nozzles shall not protrude beyond the inside contour of the shell if they interfere with bundle insertion or removal. Shell or channel nozzles which protrude beyond the inside contour of the main cylinder wall must be self-venting or draining by notching at their intersection with the high or low point of the cylinder. If separate vent and drain connections are used, they shall be flush with the inside contour of the shell or channel wall. Flange dimensions and facing shall comply with ASME B16.5, other recognized standards, or be custom designed in accordance with Code. Bolt holes shall straddle natural centerlines.

RCB-10.2 NOZZLE INSTALLATION

RCB-10.2.1 NOZZLE TYPES

Radial nozzles shall be considered as standard. Other types of nozzles may be used, by agreement between manufacturer and purchaser.

RCB-10.2.2 SADDLE-ON ATTACHMENTS

Saddle-on (set-on) attachments (see example in ASME Code Fig. UW-16.1(a)) should be considered in instances where a stick-through attachment (see example in ASME Code Fig. UW-16.1(c)) would yield a significant increase in weld volume and/or weld distortion, or in situations such as those below.

For main nozzle to auxiliary nozzle attachments, saddling-on should generally be considered when:

(1) main nozzles are too small for internal access for two-sided welding, or

(2) main nozzles are too small in proportions to the auxiliary nozzles for dimensional stability during welding.

For nozzle attachment into any type of component, saddling-on should be considered when:

(1) base component thickness exceeds twice the nozzle thickness if two-sided welding is possible, or

(2) base component thickness exceeds the nozzle thickness if one sided welding is required, or

(3) heat treatment would otherwise be required.

For attachments which are saddled-on to plate, an appropriate surface or volumetric non-destructive examination should be performed at the opening in the plate before and after welding.

R-10.3 PIPE TAP CONNECTIONS

All pipe tap connections shall be a minimum of 6000 psi standard couplings or equivalent. Each connection shall be fitted with a plug conforming to ASME B16.11 of the same material as the connection. Alternate plug materials may be used when galling is anticipated, except cast iron plugs shall not be used.

C-10.3 PIPE TAP CONNECTIONS

All pipe tap connections shall be a minimum of 3000 psi standard couplings or equivalent.

B-10.3 PIPE TAP CONNECTIONS

All pipe tap connections shall be a minimum of 3000 psi standard couplings or equivalent. Each connection shall be fitted with a plug of the same material as the connection. Alternate plug materials may be used when galling is anticipated, except cast iron plugs shall not be used.

RCB-10.3.1 VENT AND DRAIN CONNECTIONS

All high and low points on shell and tube sides of an exchanger not otherwise vented or drained by nozzles shall be provided with 3/4" minimum NPS connections for vent and drain.

 ©Tubular Exchanger Manufacturers Association, Inc.

R-10.3.2 PRESSURE GAGE CONNECTIONS

When specified, process nozzles 2" NPS or larger shall be provided with one connection of 3/4" minimum NPS for a pressure gage. See Paragraph RB-10.4.

C-10.3.2 PRESSURE GAGE CONNECTIONS

Pressure gage connections shall be as specified by the purchaser. See Paragraph C-10.4.

B-10.3.2 PRESSURE GAGE CONNECTIONS

When specified, process nozzles 2" NPS or larger shall be provided with one connection of 1/2" minimum NPS for a pressure gage. See Paragraph RB-10.4.

RB-10.3.3 THERMOMETER CONNECTIONS

When specified, process nozzles 4" NPS or larger shall be provided with one connection of 1" minimum NPS for a thermometer. See Paragraph RB-10.4.

C-10.3.3 THERMOMETER CONNECTIONS

Thermometer connections shall be as specified by the purchaser. See Paragraph C-10.4.

RB-10.4 STACKED UNITS

Intermediate nozzles between units shall have flat or raised face flanges. Pressure gage and thermometer connections may be omitted in one of the two mating connections of units connected in series. Bolting in flanges of mating connections between stacked exchangers shall be removable without moving the exchangers.

C-10.4 STACKED UNITS

Intermediate nozzles between units shall have flat or raised face flanges. Pressure gage and thermometer connections may be omitted in one of the two mating connections of units connected in series.

RCB-10.5 SPLIT FLANGE DESIGN

Circumstances of fabrication, installation, or maintenance may preclude the use of the normal integral or loose full ring nozzle flanges. Under these conditions, double split ring flanges may be used in accordance with the Code.

***RCB-10.6 NOZZLE LOADINGS**

Heat exchangers are not intended to serve as anchor points for piping; therefore, for purposes of design, nozzle loads are assumed to be negligible, unless the purchaser specifically details such loads in his inquiry as indicated in Figure RGP-RCB-10.6. The analysis and any modifications in the design or construction of the exchanger to cope with these loads shall be to the purchaser's account.

The "Recommended Good Practice" section of these standards provides the designer with additional information regarding imposed piping loads.

 ©Tubular Exchanger Manufacturers Association, Inc.

RCB-11 END FLANGES AND BOLTING

Flanges and bolting for external joints shall be in accordance with Code design rules, subject to the limitations set forth in the following paragraphs.

R-11.1 MINIMUM BOLT SIZE

The minimum permissible bolt diameter is 3/4" (M20). Sizes 1" and smaller shall be Coarse Thread Series, and larger sizes shall be 8-Pitch Thread Series. Dimensional standards are included in Section 9, Table D-5. Metric bolting is shown in Section 9, Table D-5M.

C-11.1 MINIMUM BOLT SIZE

The minimum recommended bolt diameter is 1/2" (M12). If bolting smaller than 1/2" (M12) is used, precautions shall be taken to avoid overstressing the bolting. Dimensional standards are included in Section 9, Table D-5. Metric bolting is shown in Section 9, Table D-5M.

B-11.1 MINIMUM BOLT SIZE

The minimum permissible bolt diameter shall be 5/8" (M16). Dimensional standards are included in Section 9, Table D-5. Metric bolting is shown in Section 9, Table D-5M.

RCB-11.2 BOLT CIRCLE LAYOUT

RCB-11.2.1 MINIMUM RECOMMENDED BOLT SPACING

The minimum recommended spacing between bolt centers is given in Section 9, Table D-5 or D-5M.

RCB-11.2.2 MAXIMUM RECOMMENDED BOLT SPACING

The maximum recommended spacing between bolt centers is:

$$B_{max} = 2d_B + \frac{6t}{(m+0.5)}$$

where

B = Bolt spacing, centerline to centerline, inches (mm)

d_B = Nominal bolt diameter, inches (mm)

t = Flange thickness, inches (mm)

m = Gasket factor used in Code flange calculations

RCB-11.2.3 LOAD CONCENTRATION FACTOR

When the distance between bolt centerlines exceeds recommended, the total flange moment determined by Code design methods shall be multiplied by a correction factor equal to:

$$\sqrt{\frac{B}{B_{max}}}$$

where B is the actual bolt spacing as defined by Paragraph RCB-11.2.2. The Code may require more stringent correction factors for special applications or services.

RCB-11.2.4 BOLT ORIENTATION

Bolts shall be evenly spaced and normally shall straddle both natural centerlines of the exchanger. For horizontal units, the natural centerlines shall be considered to be the horizontal and vertical centerlines of the exchanger. In special cases, the bolt count may be changed from a multiple of four.

RCB-11.3 MINIMUM RECOMMENDED WRENCH AND NUT CLEARANCES

Minimum recommended wrench and nut clearances are given in Section 9, Table D-5 and Table D-5M. Dimensions E, R_r, and R_h are for clearance purposes only.

 ©Tubular Exchanger Manufacturers Association, Inc.

RCB-11.4 BOLT TYPE

Except for special design considerations, flanges shall be through-bolted with stud bolts, threaded full length with a removable nut on each end. One full stud thread shall extend beyond each nut to indicate full engagement.

*RCB-11.5 FLANGE DESIGN

For all flanges, but especially for large diameter low pressure flanges, see "Recommended Good Practice" section.

RCB-11.6 BOLTING-ASSEMBLY AND MAINTENANCE

The following references may be used for assembly and maintenance of bolted flanged joints. See Paragraphs E-3.2.4 and E-3.2.5.

References:

(1) Torque Manual, Sturtevant-Richmont Division of Snap-on Incorporated

(2) Crane Engineering Data, VC-1900B, Crane Company.

(3) ASME PCC-1 Guidelines for Pressure Boundary Bolted Flange Joint Assembly

(4) Brown, W., "Determination of Pressure Boundary Joint Assembly Loads", WRC Bulletin 538, February 2014

RCB-11.7 PASS PARTITION RIB AREA

Gasket pass partition rib area contributes to the required bolt load, therefore, its effects should be considered in the design of flanges. One acceptable method to include rib area is shown below. Other methods are acceptable.

Y' = Y value of pass partition rib(s)*

m' = m factor of pass partition rib(s)*

b_r = Effective seating width of pass partition rib(s)

= $N/2$ for all gasket widths

r_l = Total length of pass partition rib(s)

W_{m1} and W_{m2} = *As defined in ASME Code Appendix 2 and modified below.*

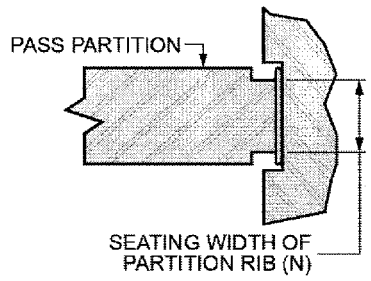

$$W_{m2} = b\,\pi\,G\,Y + b_r\,r_l\,Y'$$

$$H_p = 2P[b\,\pi\,G\,m + b_r\,r_l\,m']$$

$$H = (G)^2\,(P)\,(0.7854)$$

$$W_{m1} = H + H_p$$

*Note:

(1) m and Y values for peripheral portion of gasket may be used if greater than m' & Y'.

(2) m and Y values are listed in ASME Code Appendix 2 Table 2-5.1 or as specified by gasket manufacturer.

RCB-11.8 COLLAR STUDS FOR REMOVABLE BUNDLES

When specified by the purchaser, collar studs shall be used on units with removable tube bundles. Collar studs are recommended for B-type bonnets. The OD of the stationary tubesheet shall match the mating flange OD, and shall be through-bolted. Every fourth stud in the bolt circle (with a minimum of 4) shall be a collar stud of Type I or Type II as shown below. The corresponding tubesheet holes shall be counterbored as shown to accept the collar studs.

 ©Tubular Exchanger Manufacturers Association, Inc.

Collar studs are only used to maintain the gasket integrity and position when the channel is removed, and are not sufficient for pressure testing of the shell side. All pressure bolting should be installed and torqued prior to pressurizing.

As an alternate to collar studs, every fourth bolt hole in the tubesheet may be drilled and tapped to the size of the studs. The studs in the threaded holes shall be double nutted on the shell side or provided with machined flats to allow removal of the tube side nut without rotating the stud. The tubesheet hole does not need to be tapped through its full length, however the tapped length must be at least 1.5 times the stud diameter or as justified by calculation. The threads may begin at either the shell side or tube side face of the tubesheet. Other designs which satisfy the intent are acceptable.

FIGURE RCB-11.8.1
TYPE I COLLAR STUD (SOLID TYPE)

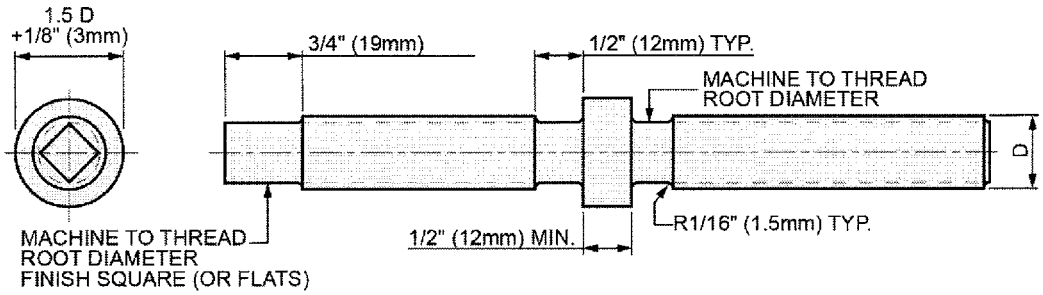

FIGURE RCB-11.8.2
TYPE II COLLAR STUD (NUT TYPE)

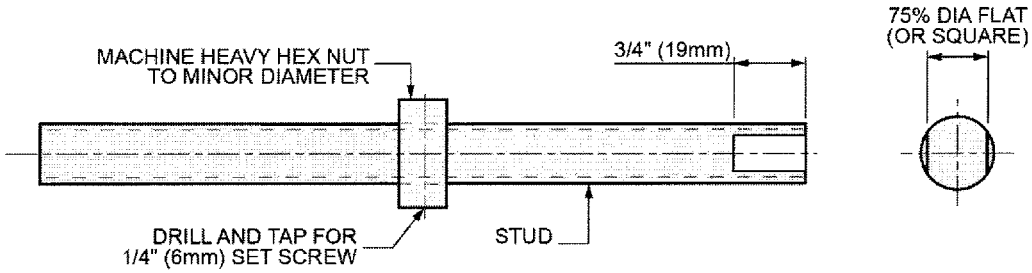

FIGURE RCB-11.8.3
ASSEMBLY AND DRILLING DETAILS (TYPES I AND II)

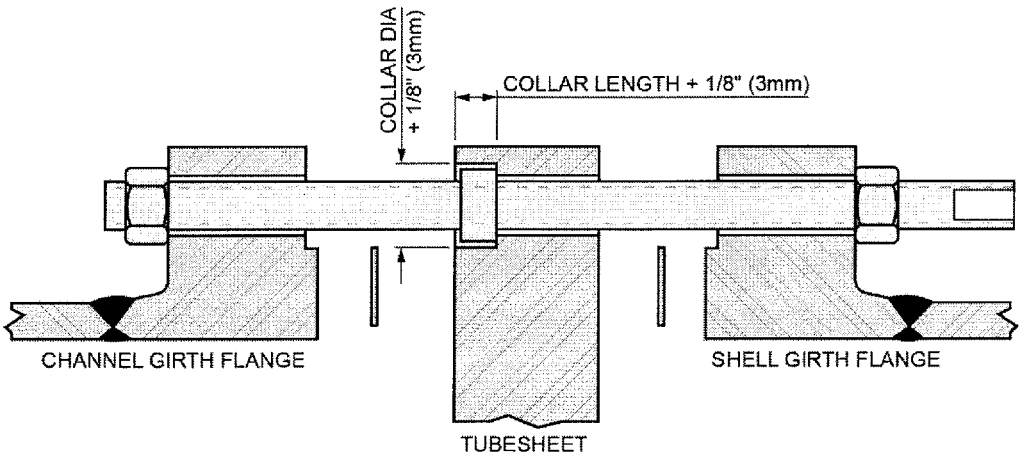

***RCB-12 FINITE ELEMENT ANALYSIS GUIDELINES**

See "Recommended Good Practice" section.

 ©Tubular Exchanger Manufacturers Association, Inc.

This page intentionally blank

 ©Tubular Exchanger Manufacturers Association, Inc.

(Note: This section is not metricated.)

V-1 SCOPE AND GENERAL

V-1.1 SCOPE

Fluid flow, interrelated with heat exchanger geometry, can cause heat exchanger tubes to vibrate. This phenomenon is highly complex and the present state-of-the-art is such that the solution to this problem is difficult to define. This section defines the basic data which should be considered when evaluating potential flow induced vibration problems associated with heat exchangers. When potential flow induced vibration problems are requested to be evaluated, the relationships presented in this section and/or other methods may be used. Due to the complexity of the problem, the TEMA guarantee does not cover vibration damage.

V-1.2 GENERAL

Damaging tube vibration can occur under certain conditions of shell side flow relative to baffle configuration and unsupported tube span. The maximum unsupported tube spans in Table RCB-4.5.2 do not consider potential flow induced vibration problems. In those cases, where the analysis indicates the probability of destructive vibration, the user should refer to Paragraph V-13.

V-2 VIBRATION DAMAGE PATTERNS

Mechanical failure of tubes resulting from flow induced vibration may occur in various forms. Damage can result from any of the following independent conditions, or combinations thereof.

V-2.1 COLLISION DAMAGE

Impact of the tubes against each other or against the vessel wall, due to large amplitudes of the vibrating tube, can result in failure. The impacted area of the tube develops the characteristic, flattened, boat shape spot, generally at the mid-span of the unsupported length. The tube wall eventually wears thin, causing failure.

V-2.2 BAFFLE DAMAGE

Baffle tube holes require a manufacturing clearance (see Paragraph RCB-4.2) over the tube outer diameter to facilitate fabrication. When large fluid forces are present, the tube can impact the baffle hole causing thinning of the tube wall in a circumferential, uneven manner, usually the width of the baffle thickness. Continuous thinning over a period of time results in tube failure.

V-2.3 TUBESHEET CLAMPING EFFECT

Tubes may be expanded into the tubesheet to minimize the crevice between the outer tube wall and the tubesheet hole. The natural frequency of the tube span adjacent to the tubesheet is increased by the clamping effect. However, the stresses due to any lateral deflection of the tube are also maximum at the location where the tube emerges from the tubesheet, contributing to possible tube breakage.

V-2.4 MATERIAL DEFECT PROPAGATION

Designs which were determined to be free of harmful vibrations will contain tubes that vibrate with very small amplitude due to the baffle tube hole clearances and the flexibility of the tube span. Such low level stress fluctuations are harmless in homogeneous material. Flaws contained within the material and strategically oriented with respect to the stress field, can readily propagate and actuate tube failure. Corrosion and erosion can add to such failure mechanisms.

V-2.5 ACOUSTIC VIBRATION

Acoustic resonance is due to gas column oscillation and is excited by phased vortex shedding. The oscillation creates an acoustic vibration of a standing wave type. The generated sound wave will not affect the tube bundle unless the acoustic resonant frequency approaches the tube natural frequency, although the heat exchanger shell and the attached piping may vibrate, accompanied with loud noise. When the acoustic resonant frequency approaches the tube natural frequency, any tendency toward tube vibration will be accentuated with possible tube failure.

V-3 FAILURE REGIONS

Tube failures have been reported in nearly all locations within a heat exchanger. Locations of relatively flexible tube spans and/or high flow velocities are regions of primary concern.

 ©Tubular Exchanger Manufacturers Association, Inc.

V-3.1 U-BENDS

Outer rows of U-bends have a lower natural frequency of vibration and, therefore, are more susceptible to flow induced vibration failures than the inner rows.

V-3.2 NOZZLE ENTRANCE AND EXIT AREA

Impingement plates, large outer tube limits and small nozzle diameters can contribute to restricted entrance and exit areas. These restricted areas usually create high local velocities which can result in producing damaging flow induced vibration.

V-3.3 TUBESHEET REGION

Unsupported tube spans adjacent to the tubesheet are frequently longer than those in the baffled region of the heat exchanger and result in lower natural frequencies. Entrance and exit areas are common to this region. The possible high local velocities, in conjunction with the lower natural frequency, make this a region of primary concern in preventing damaging vibrations.

V-3.4 BAFFLE REGION

Tubes located in baffle windows have unsupported spans equal to multiples of the baffle spacing. Long unsupported tube spans result in reduced natural frequency of vibration and have a greater tendency to vibrate.

V-3.5 OBSTRUCTIONS

Any obstruction to flow such as tie rods, sealing strips and impingement plates may cause high localized velocities which can initiate vibration in the immediate vicinity of the obstruction.

V-4 DIMENSIONLESS NUMBERS

V-4.1 STROUHAL NUMBER

Shedding of vortices from isolated tubes in a fluid medium is correlated by the Strouhal Number, which is given by:

$$S = \frac{f_s d_0}{12V}$$

where

f_s = Vortex shedding frequency, cycles/sec

V = Crossflow velocity of the fluid relative to the tube, ft/sec

d_0 = Outside diameter of tube, inches

For integrally finned tubes:

d_0 = Fin root diameter, inches

Note: In closely spaced tube arrays, the rhythmic shedding of vortices degenerates into a broad turbulence and a correlation based on Strouhal Number alone is inadequate.

V-4.2 FLUID ELASTIC PARAMETER

A dimensionless parameter used in the correlations to predict flow induced vibration is given by:

$$X = \frac{144\omega_0\delta_T}{\rho_0 d_0^{\,2}}$$

 ©Tubular Exchanger Manufacturers Association, Inc.

where

$\omega_0 =$ Effective weight of the tube per unit length, defined in Paragraph V-7.1, lb/ft

$\delta_T =$ Logarithmic decrement in the tube unsupported span (see Paragraph V-8)

$\rho_0 =$ Density of the shell side fluid at its local bulk temperature, lb/ft^3

$d_0 =$ Outside diameter of tube, inches

For integrally finned tubes:

d_0 = Fin root diameter, inches

V-5 NATURAL FREQUENCY

V-5.1 GENERAL

Most heat exchangers have multiple baffle supports and varied individual unsupported spans. Calculation of the natural frequency of the heat exchanger tube is an essential step in estimating its potential for flow induced vibration failure. The current state-of-the-art flow induced vibration correlations are not sophisticated enough to warrant treating the multi-span tube vibration problem (or mode shapes other than the fundamental) in one comprehensive analysis. Therefore, the potential for vibration is evaluated for each individual unsupported span, with the velocity and natural frequency considered being that of the unsupported span under examination. For more complex mode shapes and multi-spans of unequal lengths, see Paragraph V-14 Reference (10).

V-5.2 FACTORS AFFECTING NATURAL FREQUENCY

The individual unsupported span natural frequency is affected by:

(1) Tube elastic and inertial properties and tube geometry.

(2) Span shape.

(3) Type of support at each end of the unsupported span.

(4) Axial loading on the tube unsupported span. (see Paragraph V-6)

V-5.2.1 SPAN SHAPES

The basic span shapes are the straight span and the U-bend span.

V-5.2.2 SPAN SUPPORTS

The common support conditions are:

(1) Fixed at the tubesheet and simply supported at the baffle.

(2) Simply supported at each baffle.

The baffle supports have clearances which render them non-linear when analyzed as a support. The tubesheet is not rigid and, therefore, the "built-in" assumption is only approximate. These approximations are known to have minor effects on the calculated natural frequency.

V-5.3 FUNDAMENTAL NATURAL FREQUENCY CALCULATION

The value of the fundamental natural frequency of a tube unsupported span can be calculated for the combinations of span shape and end support conditions using Table V-5.3

where

$f_n =$ Fundamental natural frequency of the tube unsupported span, cycles/sec

$l =$ Tube unsupported span as shown in Table V-5.3, inches

$E =$ Elastic modulus of tube material at the tube metal temperature, psi (see Paragraph RCB-1.4.3)

$w_0 =$ Effective weight of the tube per unit length, defined in Paragraph V-7.1, lb/ft

 ©Tubular Exchanger Manufacturers Association, Inc.

I = Moment of inertia of the tube cross section, inches^4 is given by:

$$I = \frac{\pi}{64}\left(d_0^{\,4} - d_i^{\,4}\right)$$

d_i = Tube inside diameter, inches

d_0 = Outside diameter of tube, inches

For integrally finned tubes:

d_0 = Fin root diameter, inches

©Tubular Exchanger Manufacturers Association, Inc.

TABLE V-5.3
FUNDAMENTAL NATURAL FREQUENCY

Span Geometry	Equation	Nomenclature
(1) 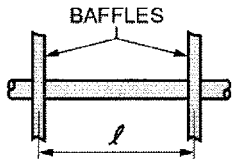 EDGE CONDITION: BOTH ENDS SIMPLY SUPPORTED	$f_n = 10.838 \frac{AC}{l^2}\left[\frac{E\,I}{w_0}\right]^{1/2}$	A = Tube axial stress multiplier. See Paragraph V-6 C = Constant depending on edge condition geometry.
(2) 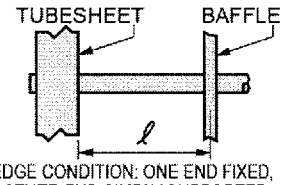 EDGE CONDITION: ONE END FIXED, OTHER END SIMPLY SUPPORTED		Span Geometry / C
(3) 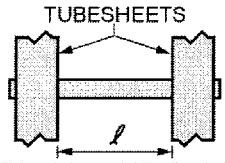 EDGE CONDITION: BOTH ENDS FIXED		1 — 9.9 2 — 15.42 3 — 22.37
(4) 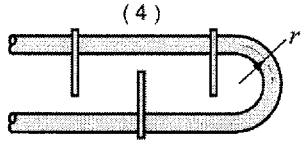 EDGE CONDITION: BOTH ENDS SIMPLY SUPPORTED	$f_n = 68.06 \frac{C_u}{r^2}\left[\frac{E\,I}{w_0}\right]^{1/2}$	r = Mean bend radius, inches C_u = Mode constant of U-bend
(5) 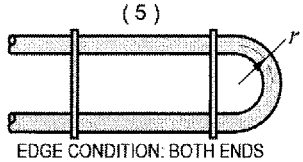 EDGE CONDITION: BOTH ENDS SIMPLY SUPPORTED		
(6) 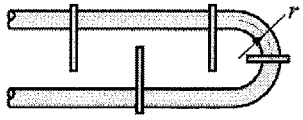 EDGE CONDITION: BOTH ENDS SIMPLY SUPPORTED		Span Geometry / C_u Figure
(7) 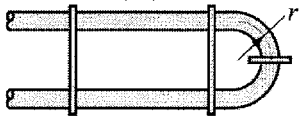 EDGE CONDITION: BOTH ENDS SIMPLY SUPPORTED		4 — V-5.3 5 — V-5.3.1 6 — V-5.3.2 7 — V-5.3.3

 ©Tubular Exchanger Manufacturers Association, Inc.

FIGURE V-5.3 U-BEND MODE CONSTANT, C_u

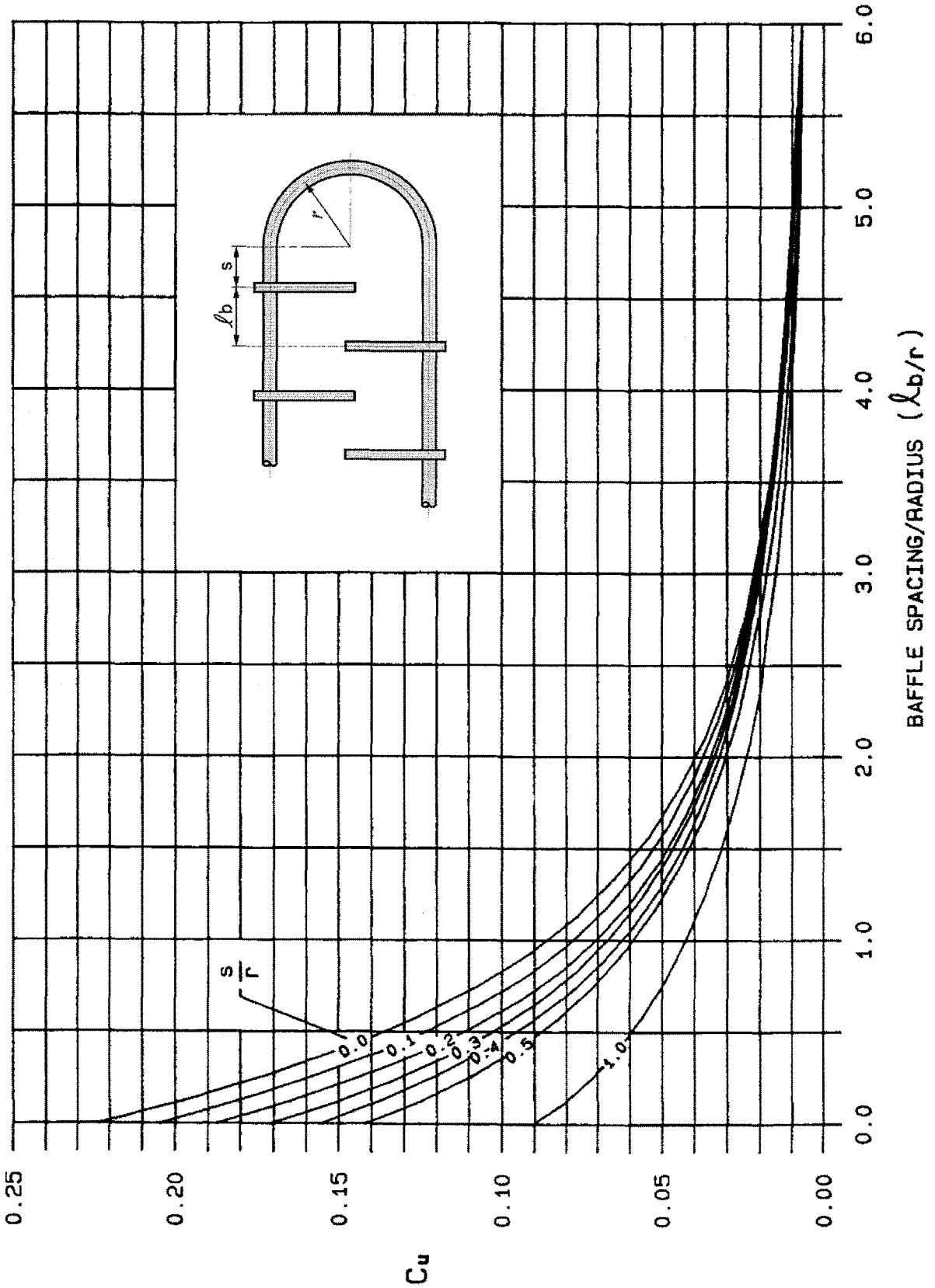

©Tubular Exchanger Manufacturers Association, Inc.

FIGURE V-5.3.1 U-BEND MODE CONSTANT, C_u

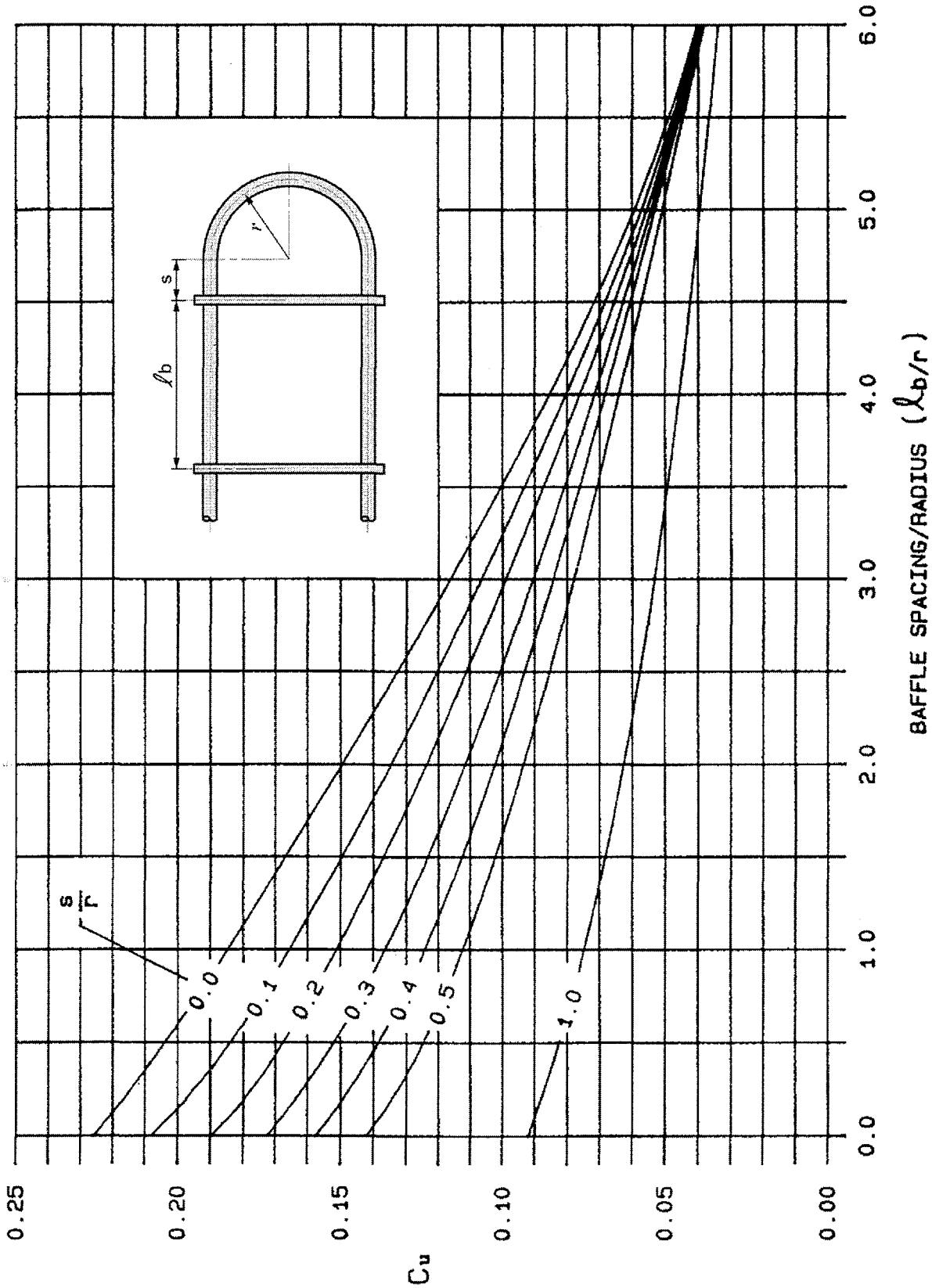

 ©Tubular Exchanger Manufacturers Association, Inc.

FIGURE V-5.3.2 U-BEND MODE CONSTANT, C_u

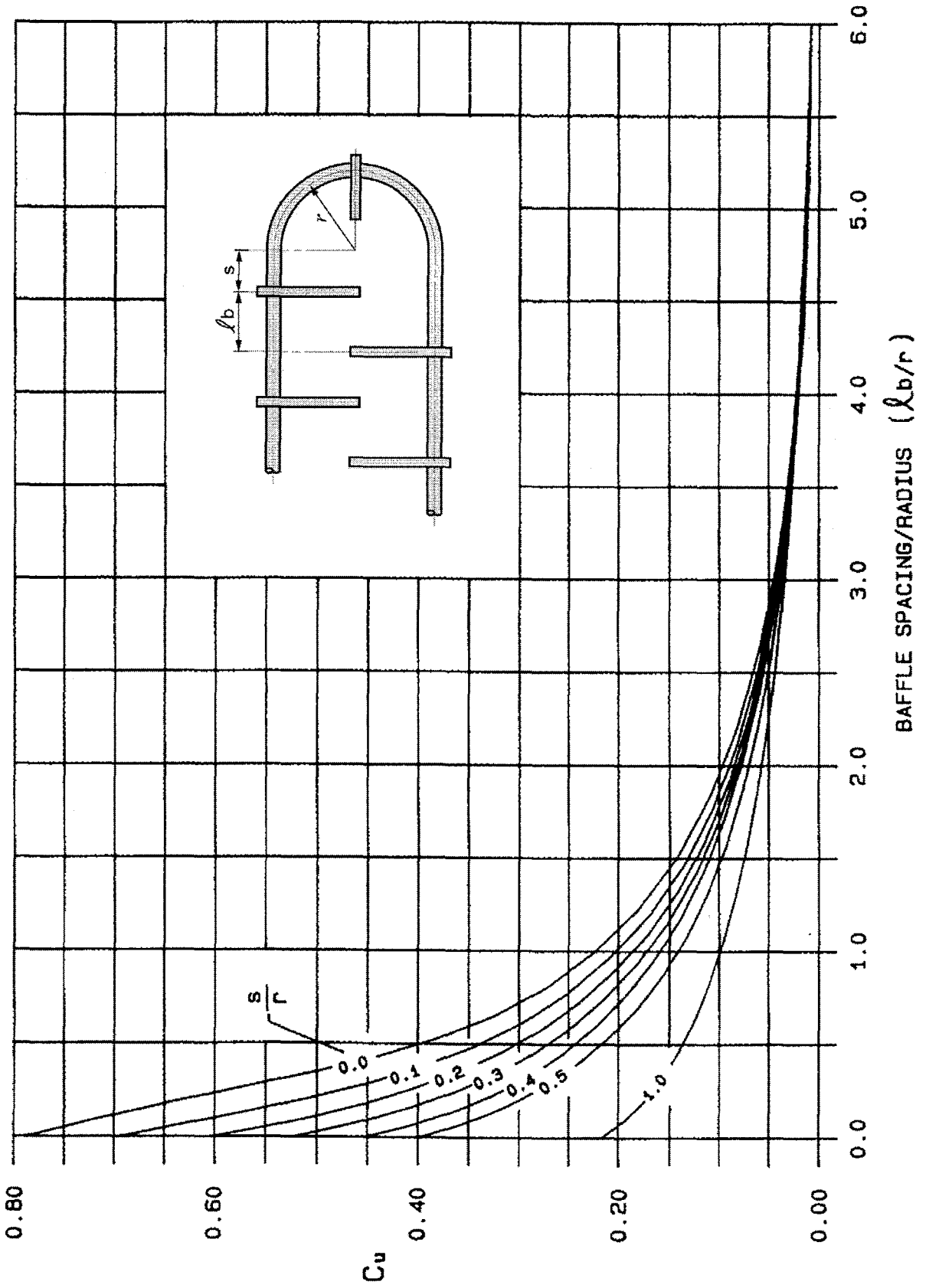

©Tubular Exchanger Manufacturers Association, Inc.

FIGURE V-5.3.3 U-BEND MODE CONSTANT, C_u

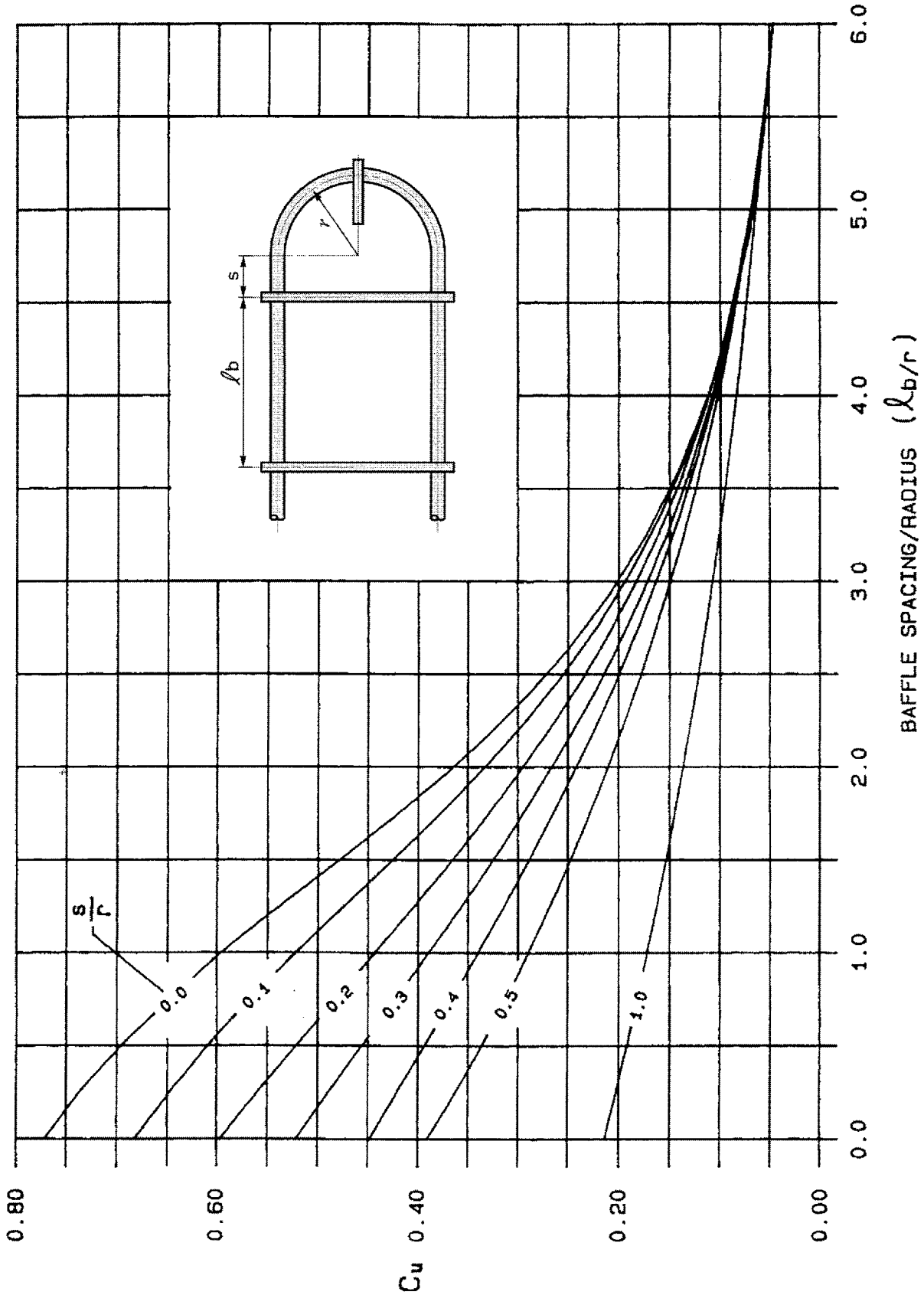

 ©Tubular Exchanger Manufacturers Association, Inc.

V-6 AXIAL TUBE STRESS

V-6.1 AXIAL TUBE STRESS MULTIPLIER

By the very function of a heat exchanger, the tubes are subjected to axial loads. Compressive axial loads decrease the tube natural frequency, and tensile loads tend to increase it. The resulting tube axial stress multiplier for a given tube unsupported span is determined by the tube end support conditions.

$$A = \left(1 + \frac{F}{F_{CR}}\right)^{1/2}$$

where

$$F = S_t A_t$$

S_t = Tube longitudinal stress, psi (for fixed tubesheet exchanger, S_t may be calculated from Paragraph A.2.3)

A_t = Tube metal cross sectional area, inches^2 (see Table D-7)

$$F_{CR} = \frac{K^2 E I}{l^2}$$

$K = \pi$ for both ends simply supported

K = 4.49 for one end fixed, other end simply supported

$K = 2\pi$ for both ends fixed

E = Elastic modulus of tube material at the tube metal temperature, psi (see Paragraph RCB-1.4.3)

l = Tube unsupported span, inches

I = Moment of inertia of the tube cross-section, inches^4 (see Paragraph V-5.3 and Table D-7)

V-6.2 U-TUBES

For some applications U-tubes may develop high levels of axial stress. A method to compute the tube axial stresses in the legs of U-tube exchangers is given in Paragraph V-14, Reference (1).

V-7 EFFECTIVE TUBE MASS

To simplify the application of the formulae, the constants have been modified to enable the use of weight instead of mass.

V-7.1 EFFECTIVE TUBE WEIGHT

Effective tube weight is defined as:

$$w_0 = w_t + w_{fi} + H_m$$

where

w_t = Total metal weight per unit length of tube, lb/ft (see Table D-7)

w_{fi} = 0.00545 $\rho_i d_i^2$ = Weight of fluid inside the tube per unit length of tube, lb/ft

H_m = Hydrodynamic mass from Paragraph V-7.1.1

where

ρ_i = Density of fluid inside the tube at the local tube side fluid bulk temperature, lb/ft^3

d_i = Inside diameter of tube, inches

V-7.1.1 HYDRODYNAMIC MASS

Hydrodynamic mass is an effect which increases the apparent weight of the vibrating body due to the displacement of the shell side fluid resulting from:

(1) Motion of the vibrating tube

(2) The proximity of other tubes within the bundle

 ©Tubular Exchanger Manufacturers Association, Inc.

(3) The relative location of the shell wall

Hydrodynamic mass is defined as:

$$H_m = C_m w_{fo}$$

where

C_m = Added mass coefficient from Figure V-7.1.1

$w_{fo} = 0.00545\, \rho_0 d_0^2$ = Weight of fluid displaced by the tube per unit length of tube, lb/ft

where

ρ_0 = Density of fluid outside the tube at the local shell side fluid bulk temperature, lb/ft^3 (For two phase fluids, use two phase density.)

d_0 = Outside diameter of tube, inches

For integrally finned tubes:

d_0 = Fin root diameter, inches

 ©Tubular Exchanger Manufacturers Association, Inc.

FIGURE V-7.1.1

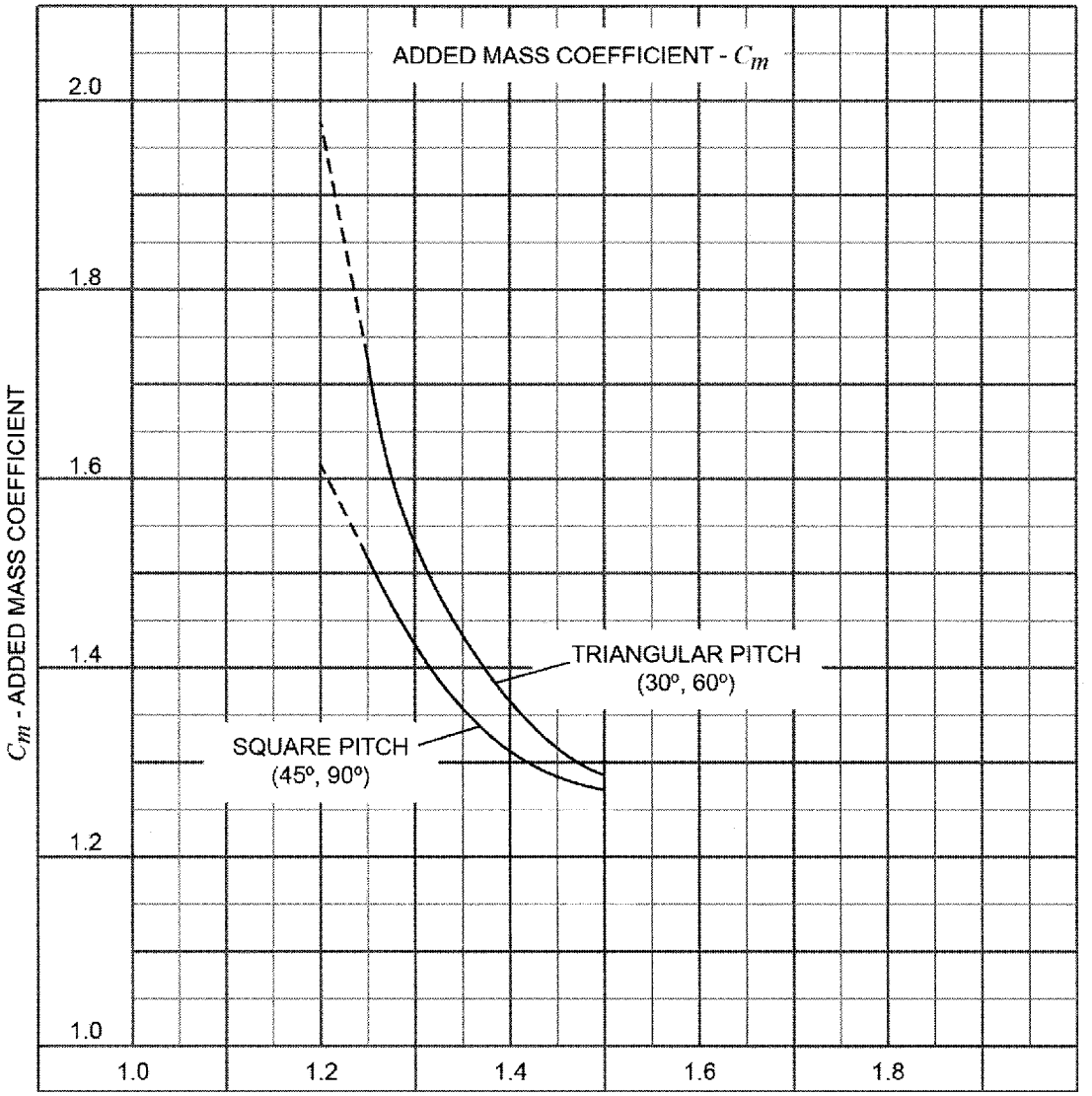

 ©Tubular Exchanger Manufacturers Association, Inc.

V-8 DAMPING

The mechanisms involved in damping are numerous, and the various effects are not readily measured or quantified. The following expressions for logarithmic decrement, δ_T, are based strictly on experimental observations and idealized models.

For shell side liquids, δ_T is equal to the greater of δ_1 or δ_2.

$$\delta_1 = \frac{3.41 d_0}{w_0 f_n} \quad \text{or} \quad \delta_2 = \frac{0.012 d_0}{w_0}\left[\frac{\rho_0 \mu}{f_n}\right]^{\frac{1}{2}}$$

where

μ = Shell side liquid viscosity, at the local shell side liquid bulk temperature, centipoise

d_0 = Outside diameter of tube, inches. For integrally finned tubes, d_0 = Fin root diameter, inches

ρ_0 = Density of shell side fluid at the local bulk temperature, lb/ft^3

f_n = Fundamental natural frequency of the tube span, cycles/sec

w_0 = Effective weight of the tube as defined in Paragraph V-7.1, lb/ft

For shell side vapors $\delta_T = \delta_V$ as follows:

$$\delta_V = 0.314 \frac{N-1}{N}\left(\frac{t_b}{l}\right)^{\frac{1}{2}}$$

where

N = Number of spans

t_b = Baffle or support plate thickness, inches

l = Tube unsupported span, inches

For two phase shell side media

$$\delta_{TP} = 0.0022\left[f(\varepsilon_g) f(S_T)\left(\frac{\rho_l d_0^{\,2}}{w_0}\right)(C_{FU})\right]$$

where

$f(\varepsilon_g)$ = Void fraction function

$= \dfrac{\varepsilon_g}{0.4}$ for $\varepsilon_g < 0.4$

$= 1$ for $0.4 \le \varepsilon_g \le 0.7$

$= 1 - \left(\dfrac{\varepsilon_g - 0.7}{0.3}\right)$ for $\varepsilon_g > 0.7$

$$\varepsilon_g = \frac{V_g}{V_g + V_l}$$

V_g = Volume flowrate of gas, ft^3/sec

V_l = Volume flowrate of liquid, ft^3/sec

 ©Tubular Exchanger Manufacturers Association, Inc.

$f(S_T)$ = Surface tension function

$$= \frac{S_T}{S_{T70}}$$

S_T = Surface tension of shell side liquid at the local bulk temperature. (See Paragraph V-14, Reference (20))

S_{T70} = Surface tension of shell side liquid at ambient temperature. (See Paragraph V-14, Reference (20))

ρ_l = Density of shell side liquid at the local bulk temperature, lb/ft^3

ρ_g = Density of shell side gas at the local bulk temperature, lb/ft^3

d_0 = Outside diameter of tube, inches. For integrally finned tubes, d_0 = Fin root diameter, inches

w_0 = Effective tube weight as defined in Paragraph V-7.1, lb/ft

Note: Use two phase density in the calculation for hydrodynamic mass

ρ_{TP} = Two phase density at local bulk temperature lb/ft^3

$$= \rho_l(1-\varepsilon_g) + \rho_g\varepsilon_g$$

C_{FU} = Confinement function, see Table V-8

Total two phase damping

$$\delta_T = \delta_{TP} + \delta_2 + \delta_V$$

Note: Use two phase properties for density and hydrodynamic mass.

TABLE V-8

CONFINEMENT FUNCTION

C_{FU}

Tube Pitch / Tube OD	Triangular Pitch C_{FU}	Square Pitch C_{FU}
1.20	2.25	1.87
1.25	2.03	1.72
1.33	1.78	1.56
1.50	1.47	1.35

 ©Tubular Exchanger Manufacturers Association, Inc.

V-9 SHELL SIDE VELOCITY DISTRIBUTION

V-9.1 GENERAL

One of the most important and least predictable parameters of flow induced vibration is fluid velocity. To calculate the local fluid velocity at a particular point in the heat exchanger is a difficult task. Very complex flow patterns are present in a heat exchanger shell. Various amounts of fluid bypass the tube bundle or leak through clearances between baffles and shell, or tube and baffle tube holes. Until methods are developed to accurately calculate local fluid velocities, the designer may use average crossflow velocities based on available empirical methods.

V-9.2 REFERENCE CROSSFLOW VELOCITY

The crossflow velocity in the bundle varies from span to span, from row to row within a span, and from tube to tube within a row. The reference crossflow velocity is calculated for each region of interest (see Paragraph V-3) and is based on the average velocity across a representative tube row in that region.

The presence of pass partition lanes aligned in the crossflow direction, clearance between the bundle and the shell, tube-to-baffle hole annular clearances, etc. reduce the net flow rate of the shell side fluid in crossflow. This should be considered in computing the reference crossflow velocity.

V-9.2.1 REFERENCE CROSSFLOW VELOCITY CALCULATIONS

The following method of calculating a reference crossflow velocity takes into account fluid bypass and leakage which are related to heat exchanger geometry. The method is valid for single phase shell side fluid with single segmental baffles in TEMA E shells. Other methods may be used to evaluate reference crossflow velocities.

Reference crossflow velocity is given by:

$$V = \frac{(F_h)(W)}{(M)(\alpha_x)(\rho_0)(3600)}, \quad \text{ft/sec}$$

V-9.2.1.1 CALCULATION OF CONSTANTS

The constants used in the calculation of the reference crossflow velocity are given by:

$$C_1 = \frac{D_1}{D_3}$$

$$C_2 = \frac{d_1 - d_0}{d_0}$$

$$C_3 = \frac{D_1 - D_2}{D_1}$$

$$f_1 = \frac{(C_1 - 1)^{3/2}}{(C_1)^{1/2}}$$

$$f_2 = \frac{C_2}{(C_1)^{3/2}}$$

$$f_3 = C_3 (C_1)^{1/2}$$

$$C_a = 0.00674\left(\frac{P - d_0}{P}\right)$$

$$C_7 = C_4\left(\frac{P}{P - d_0}\right)^{3/2}$$

 ©Tubular Exchanger Manufacturers Association, Inc.

TABLE V-9.2.1.1A

	TUBE PATTERN (See Figure RCB-2.4)			
	30°	60°	90°	45°
C_4	1.26	1.09	1.26	0.90
C_5	0.82	0.61	0.66	0.56
C_6	1.48	1.28	1.38	1.17
m	0.85	0.87	0.93	0.80

TABLE V-9.2.1.1B

	C_8 vs cut-to-diameter ratio $\frac{h}{D_1}$								
$\frac{h}{D_1}$	0.10	0.15	0.20	0.25	0.30	0.35	0.40	0.45	0.50
C_8	0.94	0.90	0.85	0.80	0.74	0.68	0.62	0.54	0.49

Linear interpolation is permitted

$$A = C_5 C_8 \left(\frac{D_1}{l_3}\right)\left(\frac{d_0}{P}\right)^2\left(\frac{P}{P-d_0}\right)$$

$$E = C_6 \left(\frac{P}{P-d_0}\right)\left(\frac{D_1}{l_3}\right)\left(1-\frac{h}{D_1}\right)$$

$$N_h = (f_1)(C_7)+(f_2)(A)+(f_3)(E)$$

$$F_h = \frac{1}{1+(N_h)\left(\frac{D_1}{P}\right)^{1/2}}$$

$$M_w = (m)(C_1)^{1/2}$$

$$M = \left[\frac{1}{1+\frac{0.70(l_3)}{D_1}\left[\frac{1}{(M_w)^{0.6}}-1\right]}\right]^{1.67}$$

$$\alpha_x = (l_3)(D_3)(C_a)$$

where

D_1 = Shell inside diameter, inches

D_2 = Baffle diameter, inches

D_3 = Outer tube limit (OTL), inches

d_1 = Tube hole diameter in baffle, inches

d_0 = Outside diameter of tube, inches

 ©Tubular Exchanger Manufacturers Association, Inc.

For integrally finned tubes:

d_0 = Fin outside diameter, inches

P = Tube pitch, inches

l_3 = Baffle spacing, inches

ρ_0 = Density of shell side fluid at the local bulk temperature, lb/ft^3

W = Shell fluid flow rate, lb/hr

h = Height from baffle cut to shell inside diameter, inches

V-9.3 SEAL STRIPS

Seal strips are often used to help block the circumferential bypass space between a tube bundle and shell, or other bypass lanes. Seal strips force fluid from the bypass stream back into the bundle. This increases the reference crossflow velocity and should be considered in a vibration analysis.

Local fluid velocity in the vicinity of seal strips may be significantly higher than the average crossflow velocity. (See Paragraph V-14, Reference 6.)

V-9.3.1 REFERENCE CROSSFLOW VELOCITY WITH SEAL STRIPS

The reference crossflow velocity is calculated by using a modified value for C_1 in the equations in Paragraph V-9.2.1.1.

$$C_1 = 1 + \left[\frac{\left(\frac{D_1}{D_3}\right) - 1}{4} \right] + (1.5)(C_3)$$

V-9.4 PASS LANES PARALLEL TO FLOW

When pass lanes are oriented parallel to flow (at 90° to the baffle cut) they create a relatively low resistance path for fluid to follow. The net effect is for less fluid to cross the tube bundle, resulting in a lower average crossflow velocity. However, tubes adjacent to these lanes may be subjected to high local velocities. The number and width of these lanes should be considered when the reference crossflow velocity is calculated.

V-9.4.1 REFERENCE CROSSFLOW VELOCITY WITH PASS LANES PARALLEL TO FLOW

To account for pass lanes parallel to flow, if they are not blocked by some type of special baffle, a modified value of D_3 can be used

where

D_3 = Outer tube limit minus (number of parallel pass lanes x width of pass lanes), inches

V-9.5 BUNDLE ENTRANCE REGION AND IMPINGEMENT PLATES

Tubes directly beneath inlet nozzles and impingement plates can be subjected to local fluid velocities greater than those in other parts of the bundle. A number of documented vibration problems have been caused by high inlet fluid velocities. These standards provide guidelines for maximum velocity in this region and set criteria for the use of impingement plates. The ρV^2 limits in Paragraph RCB-4.6 are furnished for protection against tube erosion, but do not necessarily prevent vibration damage.

V-9.6 INTEGRALLY FINNED TUBES

In computing the reference crossflow velocity, the presence of fins shall be taken into account. For the purposes of using the equations in Paragraph V-9.2 to calculate a reference crossflow velocity, the fin diameter should be used in place of the nominal tube OD for integrally finned tubes.

 ©Tubular Exchanger Manufacturers Association, Inc.

V-10 ESTIMATE OF CRITICAL FLOW VELOCITY

The critical flow velocity, V_C, for a tube span is the minimum crossflow velocity at which that span may vibrate with unacceptably large amplitudes. The critical flow velocity for tube spans in the window, overlap, inlet and outlet regions, U-bends, and all atypical locations should be calculated. The critical velocity, V_C, is defined by:

$$V_C = \frac{Df_n d_0}{12}, \text{ ft/sec}$$

where

D = Value obtained from Table V-10.1

f_n = Fundamental natural frequency, cycles/sec (see Paragraph V-5.3)

d_0 = Outside diameter of tube, inches

For integrally finned tubes:

d_0 = Fin root diameter, inches

The user should ensure that the reference crossflow velocity V, at every location, is less than V_C for that location.

 ©Tubular Exchanger Manufacturers Association, Inc.

TABLE V-10.1
FORMULAE FOR CRITICAL FLOW VELOCITY FACTOR, D

Tube Pattern (See Figure RCB-2.4)	Parameter Range for x	Dimensionless Critical Flow Velocity Factor, D
30°	0.1 to 1	$8.86\left(\frac{P}{d_0}-0.9\right)x^{0.34}$
	over 1 to 300	$8.86\left(\frac{P}{d_0}-0.9\right)x^{0.5}$
60°	0.01 to 1	$2.80\,x^{0.17}$
	over 1 to 300	$2.80\,x^{0.5}$
90°	0.03 to 0.7	$2.10\,x^{0.15}$
	over 0.7 to 300	$2.35\,x^{0.5}$
45°	0.1 to 300	$4.13\left(\frac{P}{d_0}-0.5\right)x^{0.5}$

P = Tube pitch, inches

d_0 = Tube OD or fin root diameter for integrally finned tubes, inches

$x = \dfrac{144 w_0 \delta_T}{\rho_0 d_0^{\,2}}$ = Fluid elastic parameter

where

ρ_0 = Shell side fluid density at the corresponding local shell side bulk temperature, lb/ft^3

δ_T = Logarithmic decrement (See Paragraph V-8)

w_0 = Effective weight of the tube per unit length, lb/ft (See Paragraph V-7.1)

 ©Tubular Exchanger Manufacturers Association, Inc.

V-11 VIBRATION AMPLITUDE

V-11.1 GENERAL

There are four basic flow induced vibration mechanisms that can occur in a tube bundle. These are the fluidelastic instability, vortex shedding, turbulent buffeting, and acoustic resonance. The first three mechanisms are accompanied by a tube vibration amplitude while acoustic resonance causes a loud acoustic noise with virtually no increase in tube amplitude.

Fluidelastic instability is the most damaging in that it results in extremely large amplitudes of vibration with ultimate damage patterns as described in Paragraph V-2. The design approach in this case is to avoid the fluidelastic instability situation thereby avoiding the accompanying large amplitude of vibration (see Paragraph V-10). Vortex shedding may be a problem when there is a frequency match with the natural frequency of the tube. Vibration due to vortex shedding is expected when $f_n < 2f_{vs}$, where $f_{vs} = 12SV/d_0$ (see Paragraph V-12.2). Only then should the amplitude be calculated. This frequency match may result in a vibration amplitude which can be damaging to tubes in the vicinity of the shell inlet and outlet connections. Vortex shedding degenerates into broad band turbulence and both mechanisms are intertwined deep inside the bundle. Vortex shedding and turbulent buffeting vibration amplitudes are tolerable within specified limits. Estimation of amplitude and respective limits are shown below.

V-11.2 VORTEX SHEDDING AMPLITUDE

$$y_{VS} = \frac{C_L \rho_0 d_0 V^2}{2\pi^2 \delta_T f_n^{\,2} w_0}$$

where

y_{VS} = Peak amplitude of vibration at midspan for the first mode, for single phase fluids, inches

C_L = Lift coefficient for vortex shedding, (see Table V-11.2)

ρ_0 = Density of fluid outside the tube at the local shell side fluid bulk temperature, lb/ft3

d_0 = Outside diameter of tube, inches For integrally finned tubes, d_0 = fin root diameter, inches

V = Reference crossflow velocity, ft/sec (see Paragraph V-9.2)

δ_T = Logarithmic decrement (see Paragraph V-8)

f_n = Fundamental natural frequency of the tube span, cycles/sec (see Paragraph V-5.3)

w_0 = Effective tube weight per unit length of tube, lb/ft (see Paragraph V-7.1)

V-11.2.1 RECOMMENDED MAXIMUM AMPLITUDE

$y_{VS} \le 0.02 d_0$, inches

V-11.3 TURBULENT BUFFETING AMPLITUDE

$$y_{tB} = \frac{C_F \rho_0 d_0 V^2}{8\pi \delta_T^{\,1/2} f_n^{\,3/2} w_0}$$

where

y_{tB} = Maximum amplitude of vibration for single phase fluids, inches

C_F = Force coefficient,(see Table V-11.3)

V-11.3.1 RECOMMENDED MAXIMUM AMPLITUDE

$y_{tB} \le 0.02 d_0$, inches

 ©Tubular Exchanger Manufacturers Association, Inc.

TABLE V-11.2
LIFT COEFFICIENTS
C_L

$\frac{P}{d_0}$	TUBE PATTERN (See Figure RCB-2.4)			
	30°	60°	90°	45°
1.20	0.090	0.090	0.070	0.070
1.25	0.091	0.091	0.070	0.070
1.33	0.065	0.017	0.070	0.010
1.50	0.025	0.047	0.068	0.049

TABLE V-11.3
FORCE COEFFICENTS
C_F

Location	f_n	C_F
Bundle Entrance Tubes	≤ 40	0.022
	$> 40 < 88$	$-0.00045 f_n + 0.04$
	≥ 88	0
Interior Tubes	≤ 40	0.012
	$> 40 < 88$	$-0.00025 f_n + 0.022$
	≥ 88	0

V-12 ACOUSTIC VIBRATION

Acoustic resonance is due to a gas column oscillation. Gas column oscillation can be excited by phased vortex shedding or turbulent buffeting. Oscillation normally occurs perpendicular to both the tube axis and flow direction. When the natural acoustic frequency of the shell approaches the exciting frequency of the tubes, a coupling may occur and kinetic energy in the flow stream is converted into acoustic pressure waves. Acoustic resonance may occur independently of mechanical tube vibration.

V-12.1 ACOUSTIC FREQUENCY OF SHELL

Acoustic frequency is given by:

$$f_a = \frac{409}{w}\left(\frac{P_s \gamma}{\rho_0\left(1+\frac{0.5}{x_l x_t}\right)}\right)^{1/2} i \text{, cycles/sec}$$

where

w = Distance between reflecting walls measured parallel to segmental baffle cut, inches

P_s = Operating shell side pressure, psia

γ = Specific heat ratio of shell side gas, dimensionless

ρ_0 = Shell side fluid density at local fluid bulk temperature, lb/ft^3

 ©Tubular Exchanger Manufacturers Association, Inc.

$$x_l = \frac{p_l}{d_0}$$

$$x_t = \frac{p_t}{d_0}$$

p_l = Longitudinal pitch, inches (see Figures V-12.2A and V-12.2B)

p_t = Transverse pitch, inches (see Figures V-12.2A and V-12.2B)

d_0 = Outside diameter of tube, inches. For integrally finned tubes, d_0 = Fin outer diameter, inches

i = mode (1, 2, 3, 4)

V-12.2 VORTEX SHEDDING FREQUENCY

The vortex shedding frequency is given by:

$$f_{VS} = \frac{12SV}{d_0}, \text{ cycles/sec}$$

where

V = Reference crossflow velocity, ft/sec (see Paragraph V-9.2)

S = Strouhal number (see Figures V-12.2A and V-12.2B)

d_0 = Outside diameter of tube, inches

For integrally finned tubes:

d_0 = Fin root diameter, inches

V-12.3 TURBULENT BUFFETING FREQUENCY

The turbulent buffeting frequency is given by:

$$f_{tb} = \frac{12V}{d_0 x_l x_t}\left[3.05\left(1-\frac{1}{x_t}\right)^2 + 0.28\right], \text{ cycles/sec}$$

where

d_0 = Outside diameter of tube, inches

For integrally finned tubes:

d_0 = Fin outer diameter, inches

$$x_t = \frac{p_t}{d_0}$$

$$x_l = \frac{p_l}{d_0}$$

p_l = Longitudinal pitch, inches (see Figures V-12.2A and V-12.2B)

p_t = Transverse pitch, inches (see Figures V-12.2A and V-12.2B)

V = Reference crossflow velocity, ft/sec (see Paragraph V-9.2)

V-12.4 ACOUSTIC RESONANCE

Incidence of acoustic resonance is possible if any one of the following conditions is satisfied at any operating condition.

 ©Tubular Exchanger Manufacturers Association, Inc.

V-12.4.1 CONDITION A PARAMETER

$$0.8 f_{vs} < f_a < 1.2 f_{vs}$$

or

$$0.8 f_{tb} < f_a < 1.2 f_{tb}$$

V-12.4.2 CONDITION B PARAMETER

$$V > \frac{f_a d_0 (x_l - 0.5)}{6}$$

V-12.4.3 CONDITION C PARAMETER

$$V > \frac{f_a d_0}{12S}$$

and

$$\frac{R_e}{Sx_t}\left(1 - \frac{1}{x_0}\right)^2 > 2000$$

where

$x_0 = x_l$ for 90° tube patterns

$x_0 = 2x_l$ for 30°, 45°, and 60° tube patterns

f_a = Acoustic frequency, cycles/sec (see Paragraph V-12.1)

S = Strouhal number (see Figures V-12.2A and V-12.2B)

R_e = Reynolds number, evaluated at the reference crossflow velocity

$$R_e = \frac{124.13 d_0 V \rho_0}{\mu}$$

μ = Shell side fluid viscosity, centipoise

V-12.5 CORRECTIVE ACTION

There are several means available to correct a resonant condition, but most could have some effect on exchanger performance. The simplest method is to install deresonating baffle(s) in the exchanger bundle to break the wave(s) at or near the antinode(s). This can be done without significantly affecting the shell side flow pattern. In shell and tube exchangers, the standing wave forms are limited to the first or the second mode. Failure to check both modes can result in acoustic resonance, even with deresonating baffles.

V-12.5.1 DE-TUNING BAFFLES

De-tuning baffles (sometimes called de-resonating baffles) are used to break up sound waves and prevent resonance from being attained. Depending on node locations, sometimes more than one de-tuning location is required.

De-tuning baffles may be attached to bundles by welding to tie rod spacers or to baffles. They may be installed in one piece, running the length of the bundle or in segments installed between baffles and should stop two to three inches short of tubesheets.

The width of de-tuning baffles should be such that shell side flow is allowed to equalize on each side of the baffle but not narrow enough that a sound wave can be generated at the edge. The minimum thickness of de-tuning baffles shall be 3/16".

 ©Tubular Exchanger Manufacturers Association, Inc.

FIGURE V-12.2A
STROUHAL NUMBER FOR 90° TUBE PATTERNS

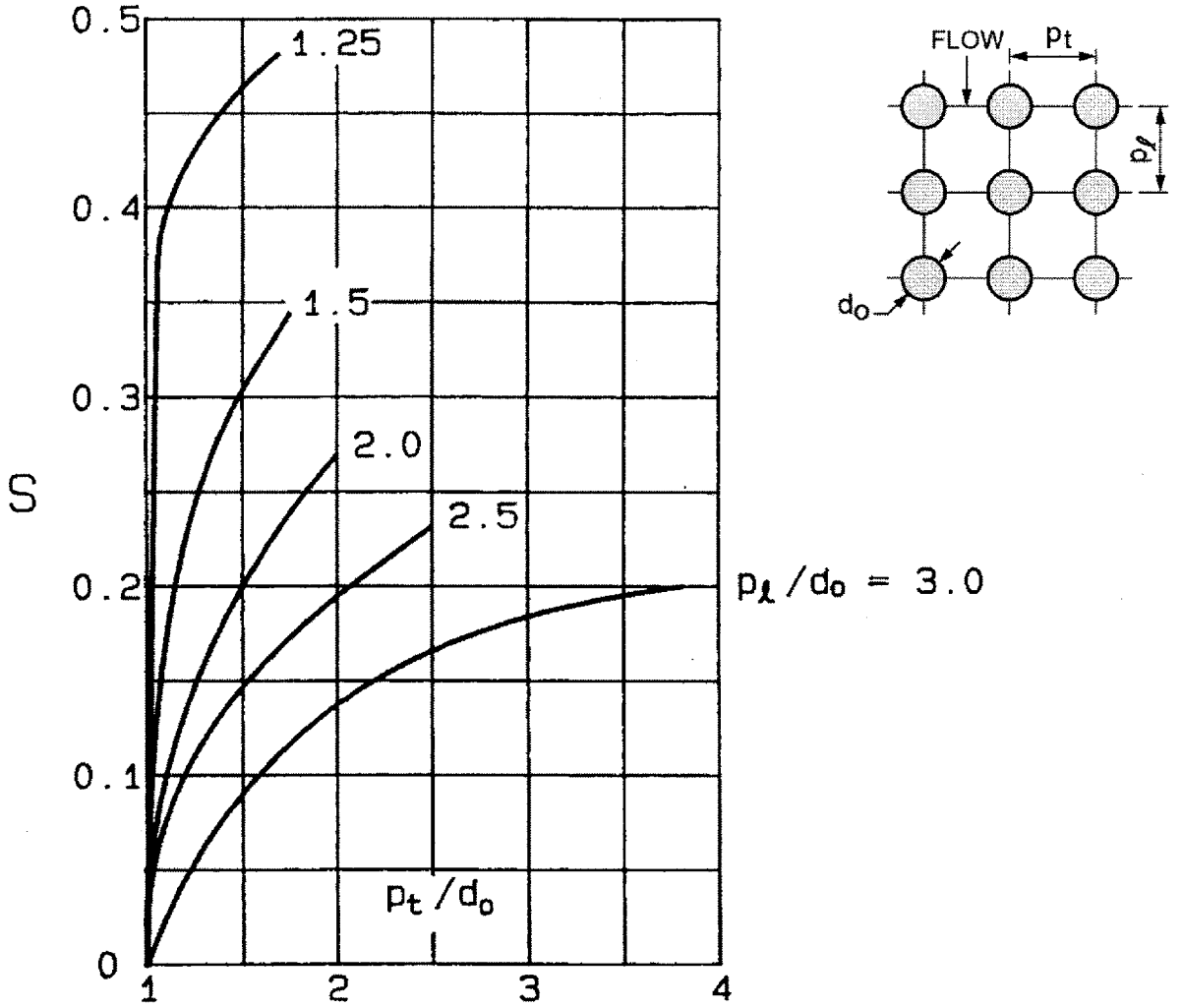

 ©Tubular Exchanger Manufacturers Association, Inc.

FIGURE V-12.2B
STROUHAL NUMBER FOR 30°, 45°, AND 60° TUBE PATTERNS

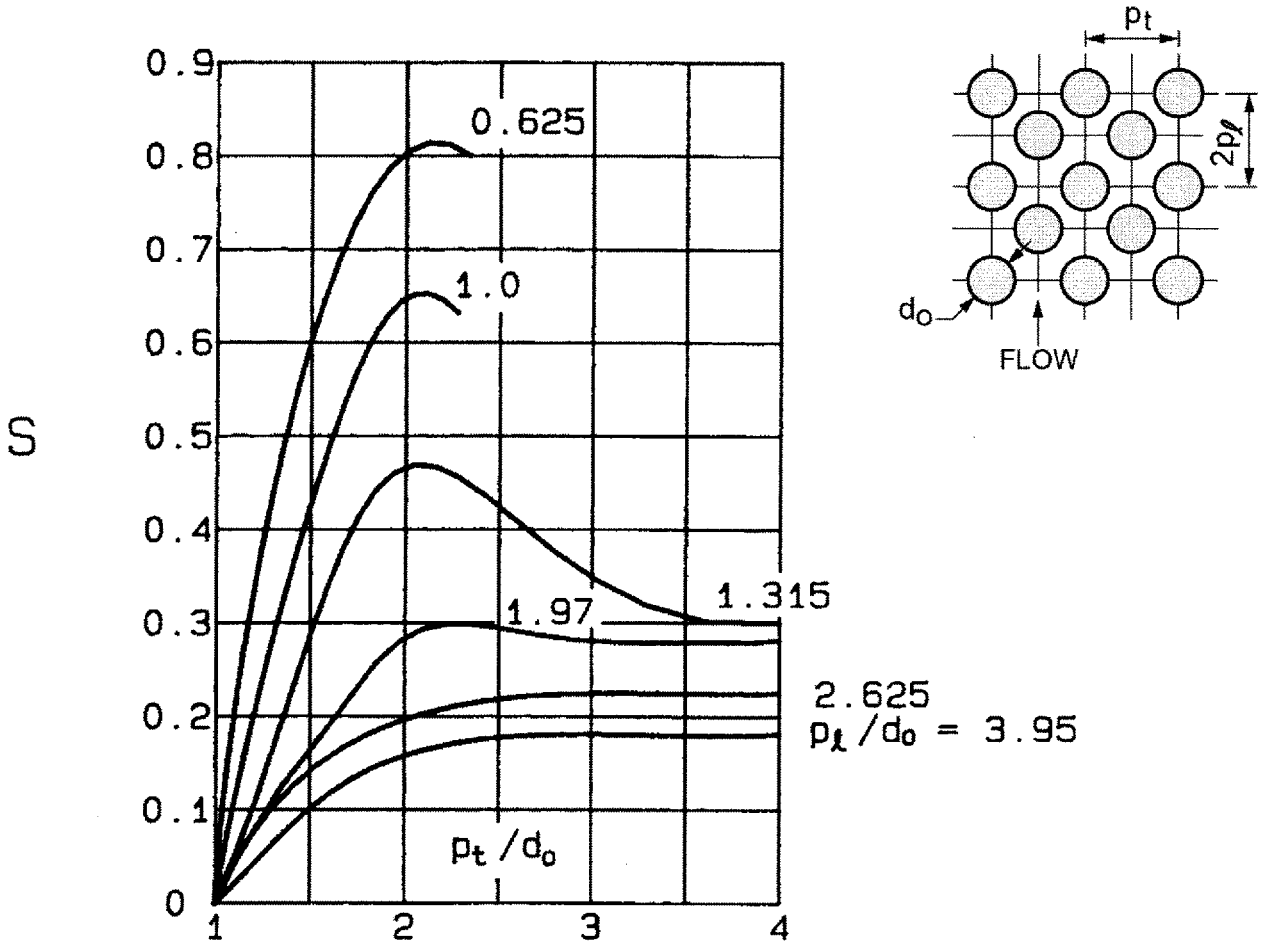

V-13 DESIGN CONSIDERATIONS

Many parameters acting independently or in conjunction with each other can affect the flow induced vibration analysis. One must be cognizant of these parameters and their effects should be accounted for in the overall heat exchanger design.

V-13.1 TUBE DIAMETER

Use of the largest reasonable tube diameter consistent with practical thermal and hydraulic design economics is desirable. Larger diameters increase the moment of inertia, thereby effectively increasing the stiffness of the tube for a given length.

V-13.2 UNSUPPORTED TUBE SPAN

The unsupported tube span is the most significant factor affecting induced vibrations. The shorter the tube span, the greater its resistance to vibration.

The thermal and hydraulic design of an exchanger is significant in determining the type of shell, baffle design and the unsupported tube length. For example, compared to single pass shells, a divided flow shell will result in approximately one-half the span length for an equal crossflow velocity. TEMA type X shells provide the opportunity to use multiple support plates to reduce the unsupported tube span, without appreciably affecting the crossflow velocity.

Compared to the conventional segmental baffle flow arrangement, multi-segmental baffles significantly reduce the tube unsupported span for the same shell side flow rate and pressure drop.

 ©Tubular Exchanger Manufacturers Association, Inc.

"No tubes in window" flow arrangement baffles provide support to all tubes at all baffle locations and also permit the use of multiple intermediate supports without affecting the crossflow velocity while reducing the unsupported tube span.

V-13.3 TUBE PITCH

Larger pitch-to-tube diameter ratios provide increased ligament areas which result in a reduced crossflow velocity for a given unsupported tube span, or a reduced unsupported tube span for a given crossflow velocity.

The increased tube-to-tube spacing reduces the likelihood of mid-span collision damage and also decreases the hydrodynamic mass coefficient given in Figure V-7.1.1.

V-13.4 ENTRANCE/EXIT AREAS

Entrance and exit areas are generally recognized to be particularly susceptible to damage in vibration prone exchangers.

Entrance and exit velocities should be calculated and compared to critical velocities to avoid vibration of the spans in question. It should be noted that compliance with Paragraph RCB-4.6.2 alone is not enough to ensure protection from flow induced vibration at the entrance/exit regions of the bundle.

Consideration may be given to the use of partial supports to reduce unsupported tube spans in the entrance/exit regions. Sufficient untubed space may have to be provided at the shell inlet/outlet connections to reduce entrance/exit velocities. Impingement plates should be sized and positioned so as not to overly restrict the area available for flow. The use of distribution belts can be an effective means of lowering entrance/exit velocities by allowing the shell side fluid to enter/exit the bundle at several locations.

V-13.5 U-BEND REGIONS

Susceptibility of U-bends to damaging vibration may be reduced by optimum location of adjacent baffles in the straight tube legs and/or use of a special bend support device. Consideration may also be given to protecting the bends from flow induced vibration by appropriately locating the shell connection and/or adjacent baffles.

V-13.6 TUBING MATERIAL AND THICKNESS

The natural frequency of an unsupported tube span is affected by the elastic modulus of the tube. High values of elastic moduli inherent in ferritic steels and austenitic stainless alloys provide greater resistance to vibratory flexing than materials such as aluminum and brass with relatively low elastic moduli. Tube metallurgy and wall thickness also affect the damping characteristic of the tube.

V-13.7 BAFFLE THICKNESS AND TUBE HOLE SIZE

Increasing the baffle thickness and reducing the tube-to-baffle hole clearance increases the system damping (see Paragraph V-8) and reduces the magnitude of the forces acting on the tube-to-baffle hole interface.

The formulae in this section do not quantitatively account for the effects of increasing the baffle thickness, or tightening of the baffle hole clearance.

V-13.8 OMISSION OF TUBES

Omission of tubes at predetermined critical locations within the bundle may be employed to reduce vibration potential. For instance, tubes located on baffle cut lines sometimes experience excessive damage in vibration prone units; therefore, selective removal of tubes along baffle cut lines may be advantageous.

V-13.9 TUBE AXIAL LOADING

The heat exchanger designer must recognize the potential adverse impact on vibration by compressive axial loading of tubes due to pressure and/or temperature conditions. This is particularly significant for tubes in single pass, fixed tubesheet exchangers where the hot fluid is in the tube side, and in all multiple tube pass fixed tubesheet exchangers. The use of an expansion joint in such cases may result in reduction of the tube compressive stress. (See Paragraph V-6.)

 ©Tubular Exchanger Manufacturers Association, Inc.

V-14 SELECTED REFERENCES

(1) Singh, K. P., and Soler, A. I., "Mechanical Design Of Heat Exchangers And Pressure Vessel Components", Arcturus Publishers, Cherry Hill, N.J., (1984)

(2) Paidoussis, M. P., "Flow Induced Vibration of Cylindrical Structures: A Review of the State-Of-The-Art", McGill University, Merl Report No. 82-1 (1982)

(3) Barrington, E. A., "Experience With Acoustic Vibrations In Tubular Exchangers", Chemical Engineering Progress, Vol. 69, No. 7 (1973)

(4) Barrington, E. A., "Cure Exchanger Acoustic Vibration", Hydrocarbon Processing, (July, 1978)

(5) Chen, S. S., and Chung, Ho, "Design Guide For Calculating Hydrodynamic Mass, Part I: Circular Cylindrical Structures", Argonne National Laboratory, Report No. ANL-CT-76-45

Chung, H., and Chen, S. S., "Design Guide For Calculating Hydrodynamic Mass, Part II: Noncircular Cylindrical Structures", Ibid, Report No. ANL-CT-78-49

(6) Kissel, J. H., "Flow Induced Vibration in A Heat Exchanger with Seal Strips", ASME HTD, Vol. 9 (1980)

(7) Chen, S. S., "Flow Induced Vibration Of Circular Cylindrical Structures", Argonne National Laboratory, Report No. ANL-CT-85-51

(8) Tinker, T., "General Discussion of Heat Transfer", Institution of Mechanical Engineers, pp 97-116, London (1951)

(9) Gorman, Daniel J., "Free Vibration Analysis of Beams & Shafts", John Wiley & Sons, (1975)

(10) Pettigrew, M.J., Goyder, H.G.D., Qiao, Z. L., Axisa, F., "Damping of Multispan Heat Exchanger Tubes", Part 1: In Gases, Flow-Induced Vibration (1986), ASME PVP Vol. 104, (1986), pp 81-87

(11) Pettigrew, M.J., Taylor, C. E., Kim, B.S., "Vibration of Tube Bundles In Two-Phase Cross-Flow: Part I - Hydrodynamic Mass and Damping", 1988 International Symposium on Flow-Induced Vibration and Noise - Volume 2, The Pressure Vessel and Piping Division - ASME, pp 79-103

(12) Connors, H.J., "Fluidelastic Vibration Of Tube Arrays Excited By Crossflow", Flow Induced Vibration In Heat Exchangers, ASME, New York (1970)

(13) Chen, S.S., "Design Guide For Calculating The Instability Flow Velocity Of Tube Arrays In Crossflow", Argonne National Laboratory, ANL-CT-81-40 (1981)

(14) Kissel, Joseph H., "Flow Induced Vibrations In Heat Exchangers - A Practical Look", Presented at the 13th National Heat Transfer Conference, Denver (1972)

(15) Moretti, P.M., And Lowery, R.L., "Hydrodynamic Inertia Coefficients For A Tube Surrounded By Rigid Tubes", ASME paper No. 75-PVR 47, Second National Congress On Pressure Vessel And Piping, San Francisco

(16) WRC Bulletin 389, dated February 1994

(17) Owen, P.R., "Buffeting Excitation Of Boiler Tube Vibration", Journal Of Mechanical Engineering Science, Vol. 7, 1965

(18) Byrce, W.B., Wharmsby, J.S. and Fitzpatrick, J., "Duct Acoustic Resonances Induced By Flow Over Coiled And Rectangular Heat Exchanger Test Banks Of Plain And Finned Tubes", Proc. BNES International Conference On Vibration In Nuclear Plants, Keswick, U.K. (1978)

(19) Chen, Y.N., "Flow Induced Vibration And Noise In Tube Bank Heat Exchangers Due To Von Karman Streets," Journal Of Engineering For Industry

(20) API, "Technical Data Book - Petroleum Refining", 1996

 ©Tubular Exchanger Manufacturers Association, Inc.

This page intentionally blank

©Tubular Exchanger Manufacturers Association, Inc.

(Note: This section is not metricated.)

T-1 SCOPE AND BASIC RELATIONS

T-1.1 SCOPE

This section outlines the basic thermal relationships common to most tubular heat transfer equipment. Included are calculation procedures for determining mean temperature difference and overall heat transfer coefficient, and discussions of the cause and effect of fouling, and procedures for determining mean metal temperatures of shell and tubes. Recommendations for the calculation of shell side and tube side heat transfer film coefficients and pressure losses are considered to be outside the scope of these Standards. It should be noted, however, that many of the standard details and clearances can significantly affect thermal-hydraulic performance, especially on the shell side. Particularly relevant in this respect is the research conducted by the University of Delaware Engineering Experiment Station under the joint sponsorship of ASME, API, TEMA, and other interested organizations. The results are summarized in their "Bulletin No. 5 (1963) Final Report of the Cooperative Research Program on Shell and Tube Exchangers."

T-1.2 BASIC HEAT TRANSFER RELATION

$$A_0 = \frac{Q}{U\Delta t_m}$$

where

A_0 = Required effective outside heat transfer surface, ft^2

Q = Total heat to be transferred, BTU/hr

U = Overall heat transfer coefficient, referred to tube outside surface BTU/hr ft^2 °F

Δt_m = Corrected mean temperature difference, °F

T-1.3 DETERMINATION OF OVERALL HEAT TRANSFER COEFFICIENT

The overall heat transfer coefficient, including fouling, shall be calculated as follows:

$$U = \frac{1}{\left[\left(\frac{1}{h_0}+r_o\right)\left(\frac{1}{E_f}\right)+r_w+r_i\left(\frac{A_o}{A_i}\right)+\frac{1}{h_i}\left(\frac{A_o}{A_i}\right)\right]}$$

where

U = Overall heat transfer coefficient (fouled)

h_o = Film coefficient of shell side fluid

h_i = Film coefficient of tube side fluid

r_o = Fouling resistance on outside surface of tubes

r_i = Fouling resistance on inside surface of tubes

r_w = Resistance of tube wall referred to outside surface of tube wall, including extended surface if present

$\frac{A_o}{A_i}$ = Ratio of outside to inside surface of tubing

E_f = Fin efficiency (where applicable)

The units of U, h_o, and h_i are BTU/hr ft^2 °F and the units of r_o, r_i, and r_w are hr ft^2 °F/BTU

 ©Tubular Exchanger Manufacturers Association, Inc.

T-1.4 TUBE WALL RESISTANCE

T-1.4.1 BARE TUBES

$$r_w = \frac{d}{24k}\left[\ln\left(\frac{d}{d-2t}\right)\right]$$

T-1.4.2 INTEGRALLY FINNED TUBES

$$rw = \frac{t}{12k}\left[\frac{d+2N\omega(d+\omega)}{(d-t)}\right]$$

where

d = OD of bare tube or root diameter if integrally finned, inches

ω = Fin height, inches

t = Tube wall thickness, inches

N = Number of fins per inch

k = Thermal conductivity, BTU/hr ft °F

T-1.5 SELECTED REFERENCE BOOKS

(1) A. P. Fraas and M. N. Ozisik, "Heat Exchanger Design", John Wiley & Sons, 1965.

(2) M. Jacob, "Heat Transfer", Vol. 1, John Wiley & Sons, 1949.

(3) D. Q. Kern, "Process Heat Transfer", McGraw-Hill Book Co., 1950.

(4) J. G. Knudsen and D. L. Katz, "Fluid Dynamics and Heat Transfer", McGraw-Hill Book Co., 1958.

(5) W. H. McAdams, "Heat Transmission", McGraw-Hill Book Co., Third Ed., 1954.

(6) Chemical Engineers' Handbook, McGraw-Hill Book Co., Fifth Ed., 1973.

*T-2 FOULING

*T-2.1 TYPES OF FOULING

Several unique types of fouling mechanisms are currently recognized. They are individually complex, can occur independently or simultaneously, and their rates of development are governed by physical and chemical relationships dependent on operating conditions. The major fouling mechanisms are:

Precipitation fouling

Particulate fouling

Chemical reaction fouling

Corrosion fouling

Biological fouling

*T-2.2 EFFECTS OF FOULING

The calculation of the overall heat transfer coefficient (see Paragraph T-1.3) contains the terms to account for the thermal resistances of the fouling layers on the inside and outside heat transfer surfaces. These fouling layers are known to increase in thickness with time as the heat exchanger is operated. Fouling layers normally have a lower thermal conductivity than the fluids or the tube material, thereby increasing the overall thermal resistance. In order that heat exchangers shall have sufficient surface to maintain satisfactory performance in normal operation with reasonable service time between cleanings, it is important in design to provide a fouling allowance appropriate to the expected operating and maintenance condition.

T-2.3 CONSIDERATIONS IN EVALUATING FOULING RESISTANCE

The determination of appropriate fouling resistance values involves both physical and economic factors, many of which vary from user to user, even for identical services. When these factors are known, they can be used to adjust typical base values tabulated in the RGP section of these standards.

 ©Tubular Exchanger Manufacturers Association, Inc.

*T-2.3.1 PHYSICAL CONSIDERATIONS

Typical physical factors influencing the determination of fouling resistances are:

Fluid properties and the propensity for fouling
Heat exchanger geometry and orientation
Surface and fluid bulk temperatures
Local fluid velocities
Heat transfer process
Fluid treatment
Cathodic protection

*T-2.3.2 ECONOMIC CONSIDERATIONS

Typical economic factors influencing the determination of appropriate fouling resistances are:

Frequency and amount of cleaning costs
Maintenance costs
Operating and production costs
Longer periods of time on stream
Fluid pumping costs
Depreciation rates
Tax rates
Initial cost and variation with size
Shut down costs
Out-of-service costs

*T-2.4 DESIGN FOULING RESISTANCES

The best design fouling resistances, chosen with all physical and economic factors properly evaluated, will result in a minimum cost based on fixed charges of the initial investment (which increase with added fouling resistance) and on cleaning and down-time expenses (which decrease with added fouling resistance). By the very nature of the factors involved, the manufacturer is seldom in a position to determine optimum fouling resistances. The user, therefore, on the basis of past experience and current or projected costs, should specify the design fouling resistances for his particular services and operating conditions. In the absence of specific data for setting proper resistances as described in the previous paragraphs, the user may be guided by the values tabulated in the RGP section of these standards. In the case of inside surface fouling, these values must be multiplied by the outside/inside surface ratio, as indicated in Equation T-1.3.

T-3 FLUID TEMPERATURE RELATIONS

T-3.1 LOGARITHMIC MEAN TEMPERATURE DIFFERENCE

For cases of true countercurrent or cocurrent flow, the logarithmic mean temperature difference should be used if the following conditions substantially apply:

Constant overall heat transfer coefficient
Complete mixing within any shell cross pass or tube pass
The number of cross baffles is large
Constant flow rate and specific heat
Enthalpy is a linear function of temperature
Equal surface in each shell pass or tube pass
Negligible heat loss to surroundings or internally between passes

The following references contain relevant information on the above items:

(1) K. Gardner and J. Taborek, "Mean Temperature Difference -A Reappraisal", AIChE Journal, December, 1977
(2) A. N. Caglayan and P. Buthod, "Factors Correct Air-Cooler and S & T Exchanger LMTD", The Oil & Gas Journal, September 6, 1976

 ©Tubular Exchanger Manufacturers Association, Inc.

For cases where the above conditions do not apply, a stepwise calculation of temperature difference and heat transfer surface may be necessary.
Excessive fluid leakage through the clearance between the cross baffles and the shell or between a longitudinal baffle and the shell can significantly alter the axial temperature profile. This condition may result in significant degradation of the effective mean temperature difference. The following references may be used for further information on this subject:
(1) J. Fisher and R. O. Parker, "New Ideas on Heat Exchanger Design", Hydrocarbon Processing, Vol. 48, No. 7, July 1969
(2) J. W. Palen and J. Taborek, "Solution of Shell side Flow Pressure Drop and Heat Transfer by Stream Analysis", CEP Symposium No. 92, Vol. 65, 1969

T-3.2 CORRECTION FOR MULTIPASS FLOW

In multipass heat exchangers, where there is a combination of cocurrent and countercurrent flow in alternate passes, the mean temperature difference is less than the logarithmic mean calculated for countercurrent flow and greater than that based on cocurrent flow. The correct mean temperature difference may be evaluated as the product of the logarithmic mean for countercurrent flow and an LMTD correction factor, F. Figures T-3.2A to T-3.2M inclusive give values for F as a function of the heat capacity rate ratio R and the required temperature effectiveness P. These charts are based on the assumption that the conditions listed in Paragraph T-3.1 are applicable. Caution should be observed when applying F factors from these charts which lie on the steeply sloped portions of the curves. Such a situation indicates that thermal performance will be extremely sensitive to small changes in operating conditions and that performance prediction may be unreliable.
Pass configurations for Figures T-3.2A through T-3.2H are stream symmetric; therefore, t and T may be taken as the cold and hot fluid temperatures, respectively, regardless of passage through the tube side or shell side. For non-stream symmetric configurations represented by Figures T-3.2I through T-3.2M, t and T must be taken as the tube side and the shell side fluid temperatures, respectively.
The following references may be useful in determining values of F for various configurations and conditions.

Configuration	Reference
(1) General	W. M. Rohsenow and J. P. Hartnett, "Handbook of Heat Transfer", McGraw-Hill Book Co., 1972
(2) Three tube passes per shell pass	F. K. Fischer, "Ind. Engr. Chem.", Vol. 30, 377 (1938)
(3) Unequal size tube passes	K. A. Gardner, "Ind. Engr. Chem.", Vol. 33, 1215 (1941)
(4) Weighted MTD	D. L. Gulley, "Hydrocarbon Proc.", Vol. 45, 116 (1966)

T-3.3 TEMPERATURE EFFECTIVENESS

The temperature effectiveness of a heat exchanger is customarily defined as the ratio of the temperature change of the tube side stream to the difference between the two fluid inlet temperatures, thus:

$$P = \frac{(t_2 - t_1)}{(T_1 - t_1)}$$

where P is the effectiveness. Figures T-3.3A, T-3.3B, and T-3.3C show the temperature effectiveness of counterflow, single-pass shell and two-pass tube, and two-pass shell and four-pass tube exchangers respectively, in terms of overall heat transfer coefficient, surface, fluid flow rates, and specific heats.

In all cases, the lower case symbols (t_1, t_2, w, and c) refer to the tube side fluid and upper case symbols (T_1, T_2, W, and C) to the shell side fluid. (This distinction is not necessary in the case of counterflow exchangers, but confusion will be avoided if it is observed.) These charts are based on the same conditions listed in Paragraph T-3.1.

 ©Tubular Exchanger Manufacturers Association, Inc.

T-4 MEAN METAL TEMPERATURES OF SHELL AND TUBES

T-4.1 SCOPE

This paragraph outlines the basic method for determination of mean shell and tube metal temperatures. These temperatures have a pronounced influence in the design of fixed tubesheet exchangers. Knowledge of mean metal temperatures is necessary for determining tubesheet thickness, shell and tube axial stress levels, and flexible shell element requirements. This paragraph provides the basis for determining the differential thermal expansion term, ΔL, required for the calculation of equivalent differential expansion pressure, P_d (see Paragraph A.1.5.1).

T-4.2 DEFINITIONS

T-4.2.1 MEAN METAL TEMPERATURE

The mean metal temperature of either the shell or tubes is the temperature taken at the metal thickness midpoint averaged with respect to the exchanger tube length. For the case of integrally finned tubes, the temperature at the prime tube metal thickness midpoint applies. The fin metal temperature should not be weighted with the prime tube metal temperature.

T-4.2.2 FLUID AVERAGE TEMPERATURE

The shell or tube fluid average temperature is the bulk shell or tube fluid temperature averaged with respect to the exchanger tube length.

T-4.3 RELATIONSHIP BETWEEN MEAN METAL TEMPERATURES AND FLUID AVERAGE TEMPERATURES

T-4.3.1 SHELL MEAN METAL TEMPERATURE

The shell mean metal temperature, generally assumed to be equal to the shell fluid average temperature, is given by:

$$T_M = \overline{T}$$

where

T_M = Shell mean metal temperature, °F

$\overline{T}$ = Shell fluid average temperature, °F

This assumption is valid for cases without abnormal rates of heat transfer between the shell and its surroundings. If significant heat transfer to or from the shell could occur, determination of the effect on the shell metal temperature should be made. In general, most high or low temperature externally insulated exchangers and moderate temperature non-insulated exchangers meet the above assumption.

T-4.3.2 TUBE MEAN METAL TEMPERATURE

The tube mean metal temperature is dependent not only on the tube fluid average temperature, but also the shell fluid average temperature, the shell and tube heat transfer coefficients, shell and tube fouling resistances, and tube metal resistance to heat transfer, according to the following relationship

$$t_M = \overline{T} - \left[\frac{\left(\frac{1}{h_o} + r_o\right)\left(\frac{1}{E_f}\right) + \frac{r_w}{2}}{\left(\frac{1}{h_o} + r_o\right)\left(\frac{1}{E_f}\right) + r_w + \left(r_i + \frac{1}{h_i}\right)\left(\frac{A_o}{A_i}\right)} \right] \left[\overline{T} - \overline{t}\right]$$

where

t_M = Tube mean metal temperature, °F

$\overline{t}$ = Tube side fluid average temperature, °F (see Paragraph T-4.4)

All other terms are as defined by Paragraphs T-1.3 and T-4.3.1.

 ©Tubular Exchanger Manufacturers Association, Inc.

T-4.3.3 TUBESHEET MEAN METAL TEMPERATURE

Untubed portion of tubesheet:

$$T_{TS} = \frac{T_T + T_S}{2}$$

Tubed portion of tubesheet:

$$T_{TS} = T_T + (T_S - T_T)\frac{(\eta - F)}{(A/a)\left(1 + \eta\frac{h_T}{h_s}\right)}$$

where

T_T = Tube side fluid temperature, °F

T_S = Shell side fluid temperature, °F

h_T = Tube side heat transfer coefficient, BTU/Hr-ft^2 –°F

h_s = Shell side heat transfer coefficient, BTU/Hr-ft^2 - °F

$$\eta = \frac{A}{aK}\left[\frac{1 + \frac{A}{aK}\tanh(K)}{\frac{A}{aK} + \tanh(K)}\right]$$

$$K = \sqrt{\frac{Ah_T L}{a12k}} \text{ degrees}$$

where k = tubesheet metal thermal conductivity, BTU/Hr-ft °F

L = tubesheet thickness, inches

$$F = \frac{1}{\cosh(K) + \frac{aK}{A}\sinh(K)}$$

for triangular pitch

$$A = \pi dL/2$$

$$a = 0.433P^2 - \pi d^2/8$$

for square pitch

$$A = \pi dL$$

$$a = P^2 - \pi d^2/4$$

where

d = tube ID, inches

P = tube pitch, inches

T-4.4 ESTIMATION OF SHELL AND TUBE FLUID AVERAGE TEMPERATURES

The methods presented in this paragraph are based on equipment operating under steady-state conditions.

T-4.4.1 GENERAL CONSIDERATIONS

Fluid average temperatures in shell and tube heat exchangers are affected by the following:

(1) Shell and tube fluid terminal temperatures

(2) Shell and tube fluid temperature profiles with respect to enthalpy (the following methods assume linear profiles)

(3) Variable heat transfer rates with respect to exchanger length (the following methods assume a constant heat transfer rate through the length of the unit)

 ©Tubular Exchanger Manufacturers Association, Inc.

(4) Heat exchanger geometry, specifically pass configuration, of the shell as well as the tubes

T-4.4.2 ISOTHERMAL SHELL FLUID/ISOTHERMAL TUBE FLUID, ALL PASS ARRANGEMENTS

$$\overline{T} = T_1 = T_2$$

$$\bar{t} = t_1 = t_2$$

where

T_1 = Shell side fluid inlet temperature, °F

T_2 = Shell side fluid outlet temperature, °F

t_1 = Tube side fluid inlet temperature, °F

t_2 = Tube side fluid outlet temperature, °F

T-4.4.3 ISOTHERMAL SHELL FLUID/LINEAR NONISOTHERMAL TUBE FLUID, ALL PASS ARRANGEMENTS

$$\overline{T} = T_1 = T_2$$

$$\bar{t} = \overline{T} \pm LMTD$$

T-4.4.4 LINEAR NONISOTHERMAL SHELL FLUID/ISOTHERMAL TUBE FLUID, ALL PASS ARRANGEMENTS

$$\bar{t} = t_1 = t_2$$

$$\overline{T} = \bar{t} \pm LMTD$$

T-4.4.5 LINEAR NONISOTHERMAL SHELL AND TUBE FLUIDS, TYPE "E" SHELL

The average shell fluid temperature may be determined from the following equation:

$$\overline{T} = T_1 - \left(\frac{1}{a} + \frac{1}{1-e^a}\right)(T_1 - T_2)$$

The value of a depends on tube pass geometry and flow direction as given below:

Single pass tubes - cocurrent flow

$$a = -\frac{|t_2 - t_1|}{LMTD_{co}}\left[\frac{T_1 - T_2}{t_2 - t_1} + 1\right]$$

Single pass tubes - countercurrent flow

$$a = -\frac{|t_2 - t_1|}{LMTD_{cnt}}\left[\frac{T_1 - T_2}{t_2 - t_1} - 1\right]$$

$$\text{For cases where } 0.99 < \frac{(T_1 - T_2)}{(t_2 - t_1)} < 1.01 \text{ use } \overline{T} = 0.5(T_1 + T_2)$$

Even number of tube passes

$$a = -\frac{|t_2 - t_1|}{LMTD_{cnt}}\left[\frac{T_1 - T_2}{t_2 - t_1}\right]$$

where

$LMTD_{co}$ = Cocurrent flow $LMTD$

$LMTD_{cnt}$ = Uncorrected countercurrent flow $LMTD$

t_1, t_2, T_1, T_2 are defined in Paragraph T-4.4.2

 ©Tubular Exchanger Manufacturers Association, Inc.

The average tube fluid temperature may then be determined from the following equation:

$$\bar{t} = \bar{T} \pm LMTD(F)$$

where

$F = LMTD$ Correction Factor

T-4.4.6 OTHER CASES

For cases involving nonlinear temperature-enthalpy profiles and/or pass geometries other than those given above, other methods must be used to establish mean metal temperatures. However, with the assumption of constant overall heat transfer rate, the following relationship always applies:

$$\bar{T} - \bar{t} = \pm LMTD(F)$$

If one fluid average temperature can be established accurately, knowing the effective mean temperature difference allows the other to be determined.

T-4.5 SELECTION OF THE DESIGN CASE

All foreseeable modes of operation should be considered when specifying the metal temperatures to be used for calculation of the equivalent differential expansion pressure. Consideration should be given to the following:

(1) Normal operation, as specified by purchaser, under fouled conditions at the design flow rates and terminal temperatures

(2) Operation at less than the design fouling allowance (under such conditions, the purchaser should supply details in regard to anticipated operating parameters)

Other operating conditions to which the equipment may be subjected, as specified by the purchaser, may include, but are not necessarily limited to:

(1) Alternate flow rates and/or terminal temperatures as may be the case during start-up, shutdown, variable plant loads, etc.

(2) Flow of a process fluid or clean fluid through one side, but not the other

The largest positive and negative values of equivalent differential expansion pressure generally correspond with the cases under which the largest positive and negative differential thermal growths occur; an exception being if varying values of material modulii of elasticity alter the comparison.

The differential thermal growth between the shell and tubes is determined as follows:

$$\Delta L = L_t(\alpha_s[T_M - 70] - \alpha_T[t_M - 70])$$

where

ΔL = Differential thermal growth between the shell and tubes, inches

L_t = Tube length, face-to-face of tubesheets, inches

α_S = Coefficient of thermal expansion of the shell, inches/inch/ °F (see Table D-11)

α_T = Coefficient of thermal expansion of the tubes, inches/inch/ °F (see Table D-11)

T-4.6 ADDITIONAL CONSIDERATIONS

T-4.6.1 SERIES ARRANGEMENTS

Individual exchangers in series arrangements are generally subjected to different temperature conditions. Each individual exchanger should be evaluated separately. Alternately, all could be designed for the most severe conditions in the series.

T-4.6.2 OTHER MODES OF OPERATION

If fixed tubesheet heat exchangers are to be operated under conditions differing from those for which the initial design was checked, it is the purchaser's responsibility to determine that such operation will not lead to a condition of overstress. This requires a full re-evaluation of required tubesheet thickness, shell and tube longitudinal stresses, tube-to-tubesheet joint loads, and flexible shell elements based on the new operating conditions.

 ©Tubular Exchanger Manufacturers Association, Inc.

FIGURE T-3.1

CHART FOR SOLVING LMTD FORMULA

$$\text{LMTD} = \frac{(\text{GTTD} - \text{LTTD})}{\ln\left(\frac{\text{GTTD}}{\text{LTTD}}\right)}$$

where GTTD = Greater Terminal Temperature Difference.
LTTD = Lesser Terminal Temperature Difference.

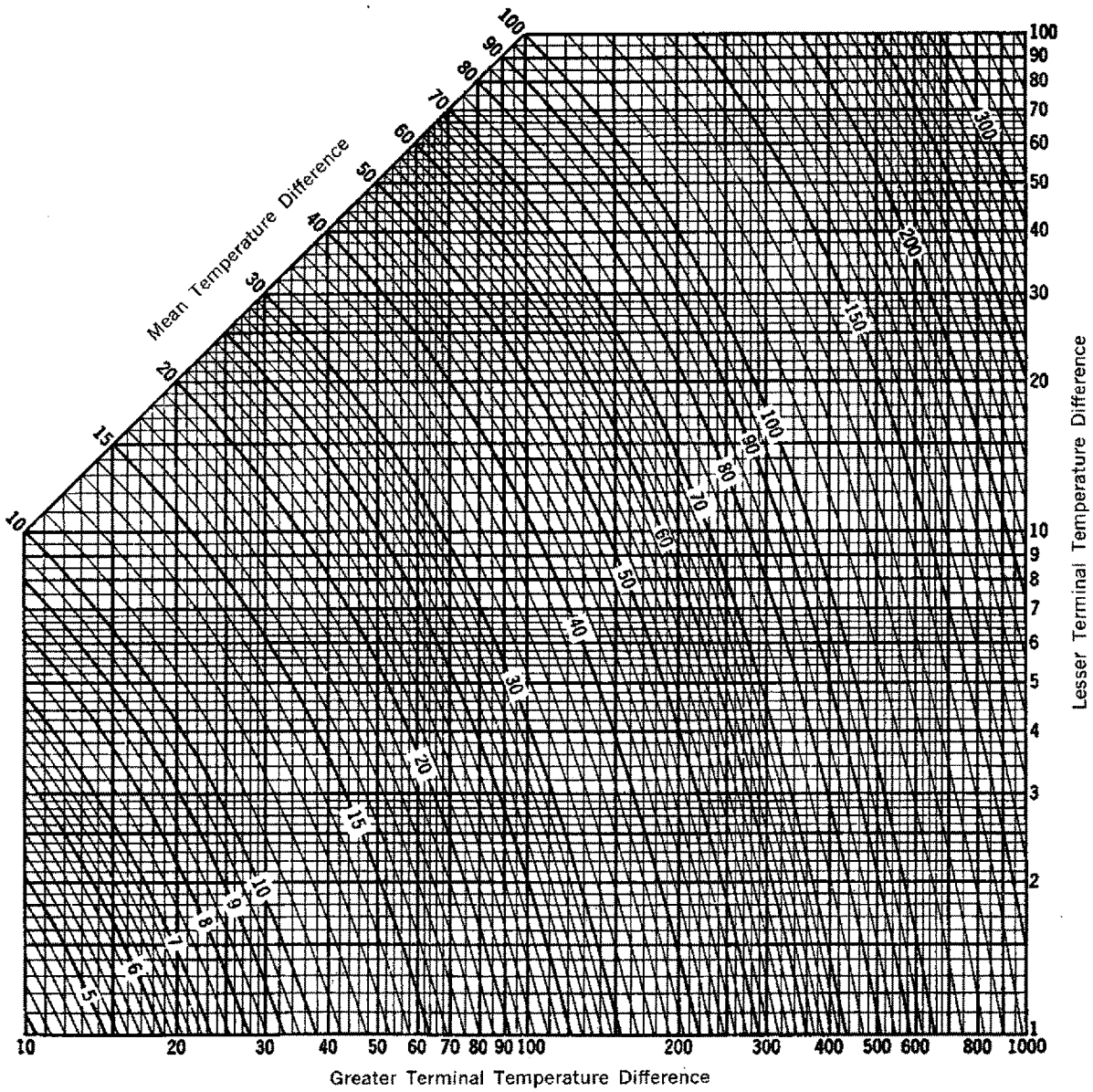

NOTE—For points not included on this sheet multiply Greater Terminal Temperature Difference and Lesser Terminal Temperature Difference by any multiple of 10 and divide resulting value of curved lines by same multiple.

©Tubular Exchanger Manufacturers Association, Inc.

FIGURE T-3.2A

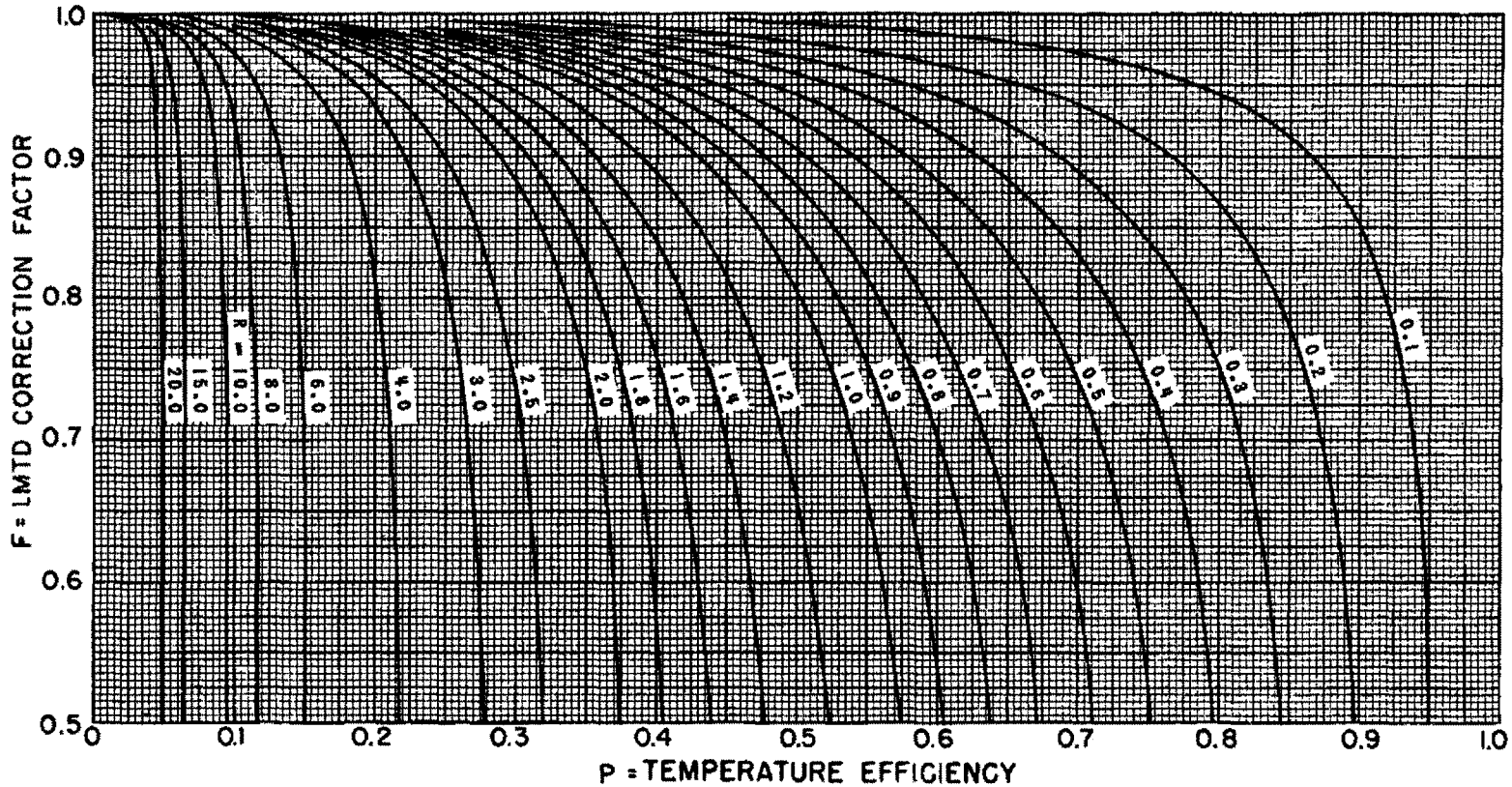

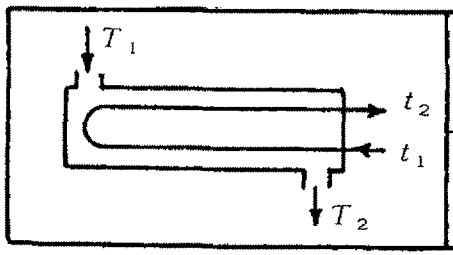

LMTD CORRECTION FACTOR

1 SHELL PASS EVEN NUMBER OF TUBE PASSES

$$P = \frac{t_2 - t_1}{T_1 - t_1} \qquad R = \frac{T_1 - T_2}{t_2 - t_1}$$

©Tubular Exchanger Manufacturers Association, Inc.

FIGURE T-3.2B

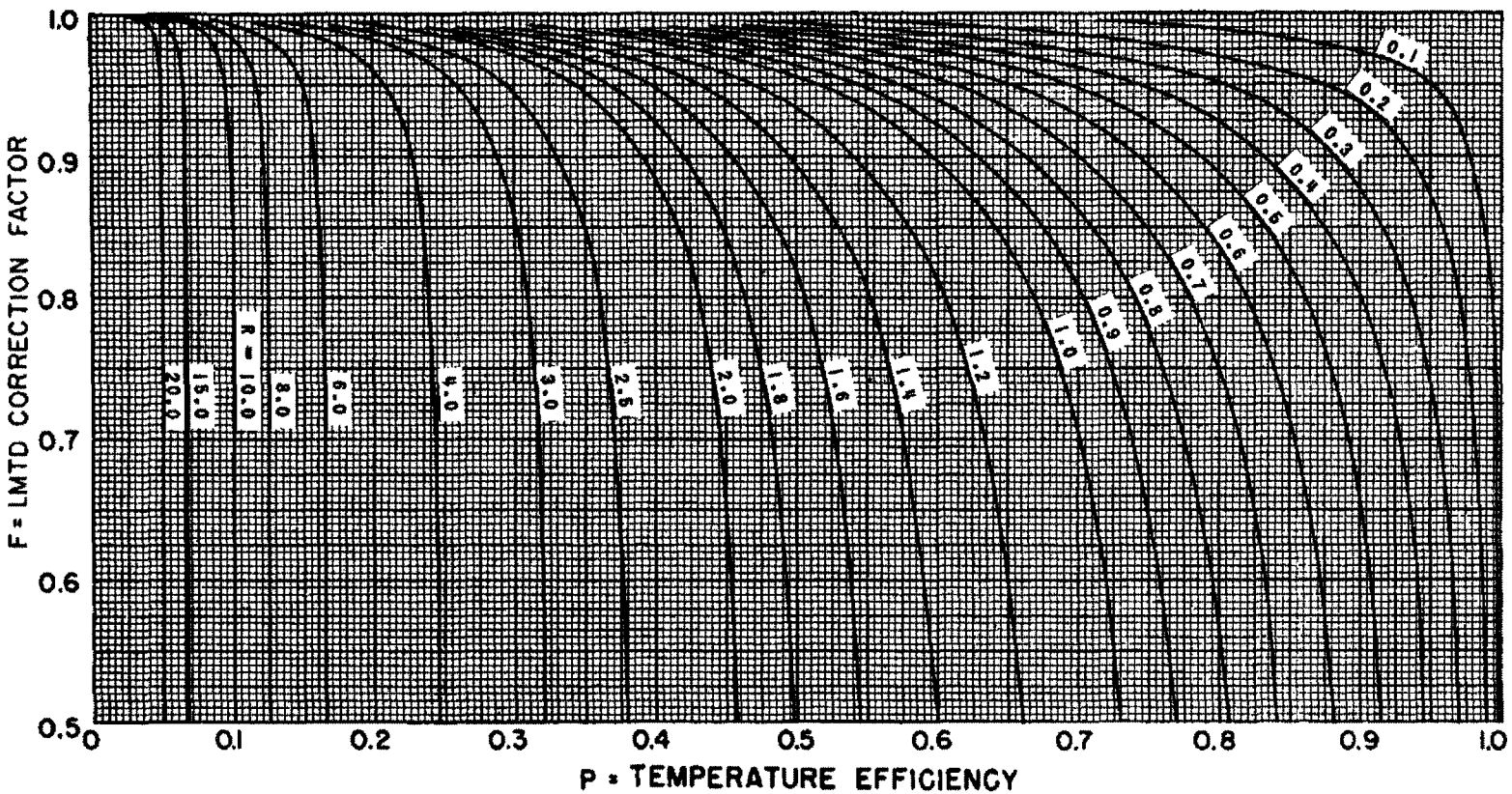

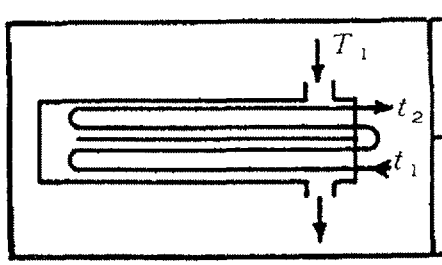

LMTD CORRECTION FACTOR

2 SHELL PASSES 4 OR MULTIPLE OF 4 TUBE PASSES

$$P = \frac{t_2 - t_1}{T_1 - t_1} \qquad R = \frac{T_1 - T_2}{t_2 - t_1}$$

©Tubular Exchanger Manufacturers Association, Inc.

FIGURE T-3.2C

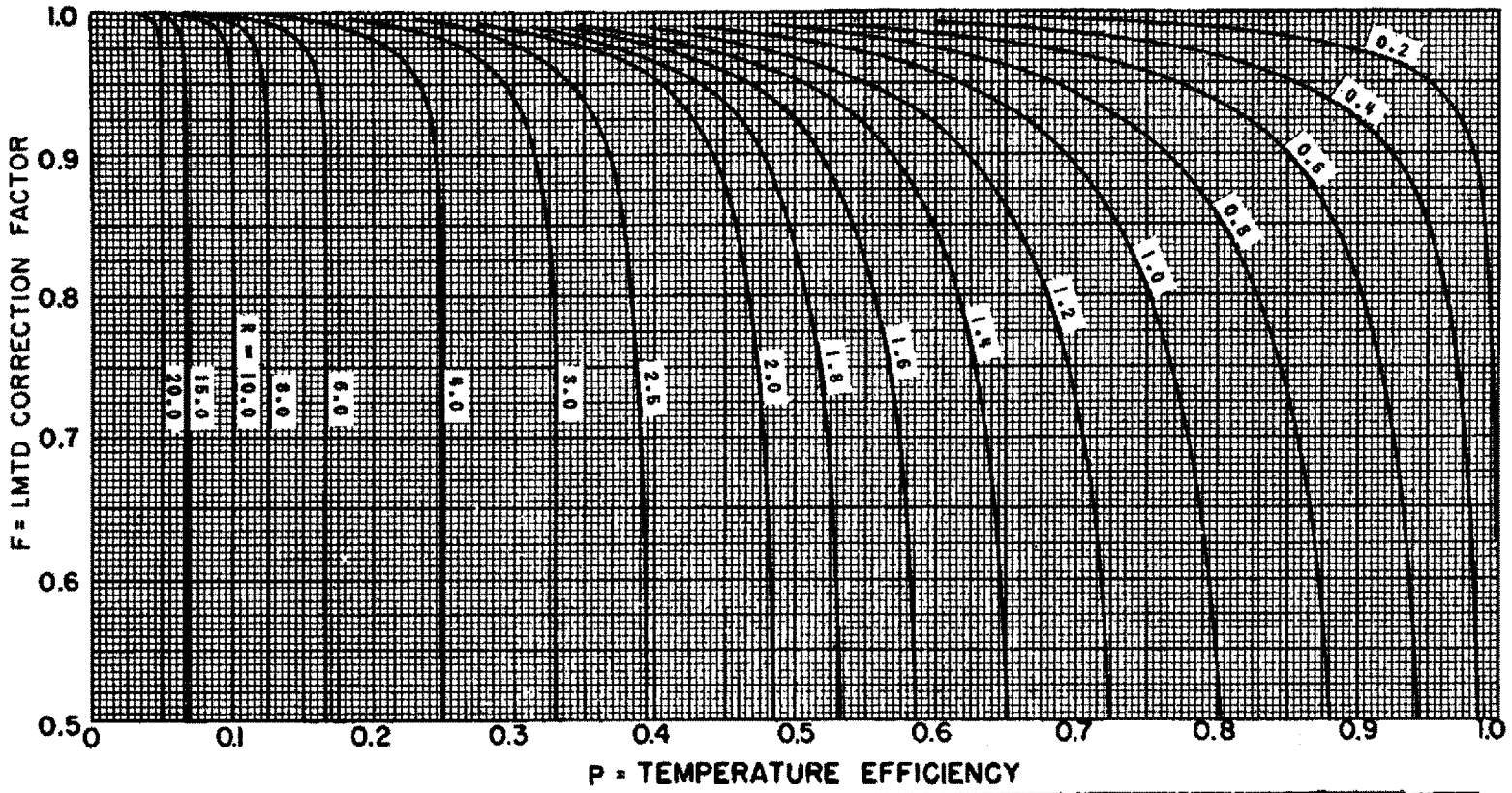

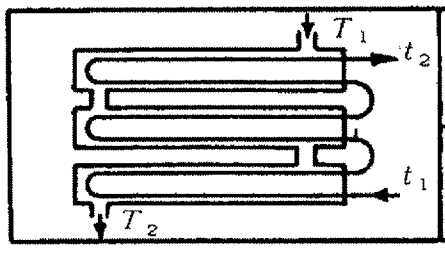

LMTD CORRECTION FACTOR

3 SHELL PASSES 6 OR MORE EVEN NUMBER OF TUBE PASSES

$$P = \frac{t_2 - t_1}{T_1 - t_1} \qquad R = \frac{T_1 - T_2}{t_2 - t_1}$$

©Tubular Exchanger Manufacturers Association, Inc.

FIGURE T-3.2D

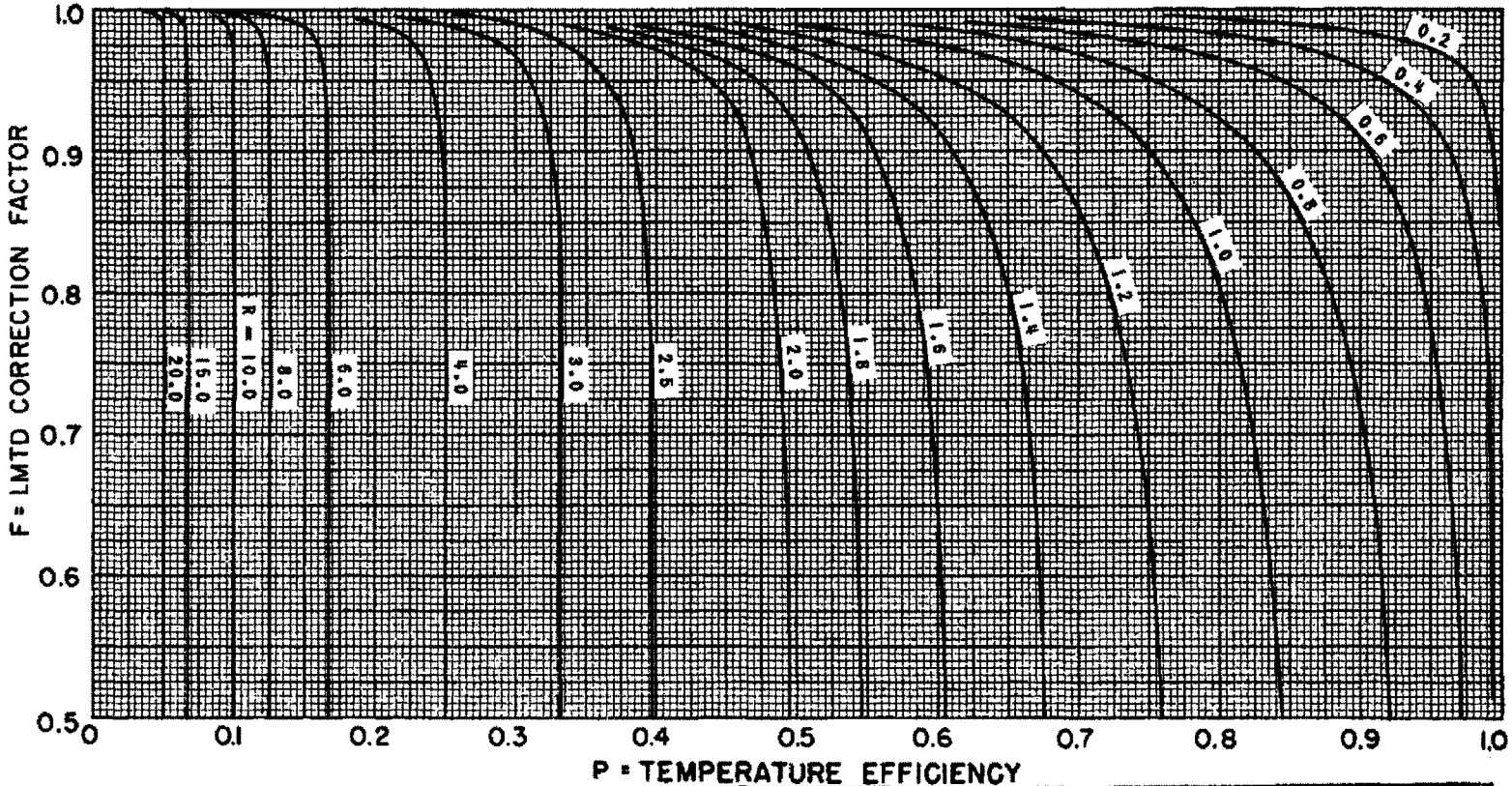

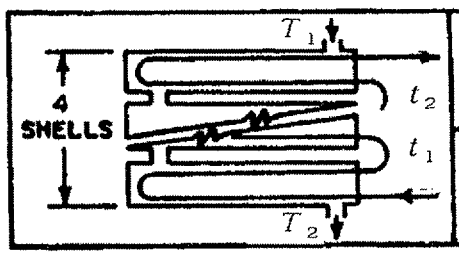

LMTD CORRECTION FACTOR

4 SHELL PASSES 8 OR MULTIPLE OF 8 TUBE PASSES

$$P = \frac{t_2 - t_1}{T_1 - t_1} \qquad R = \frac{T_1 - T_2}{t_2 - t_1}$$

©Tubular Exchanger Manufacturers Association, Inc.

FIGURE T-3.2E

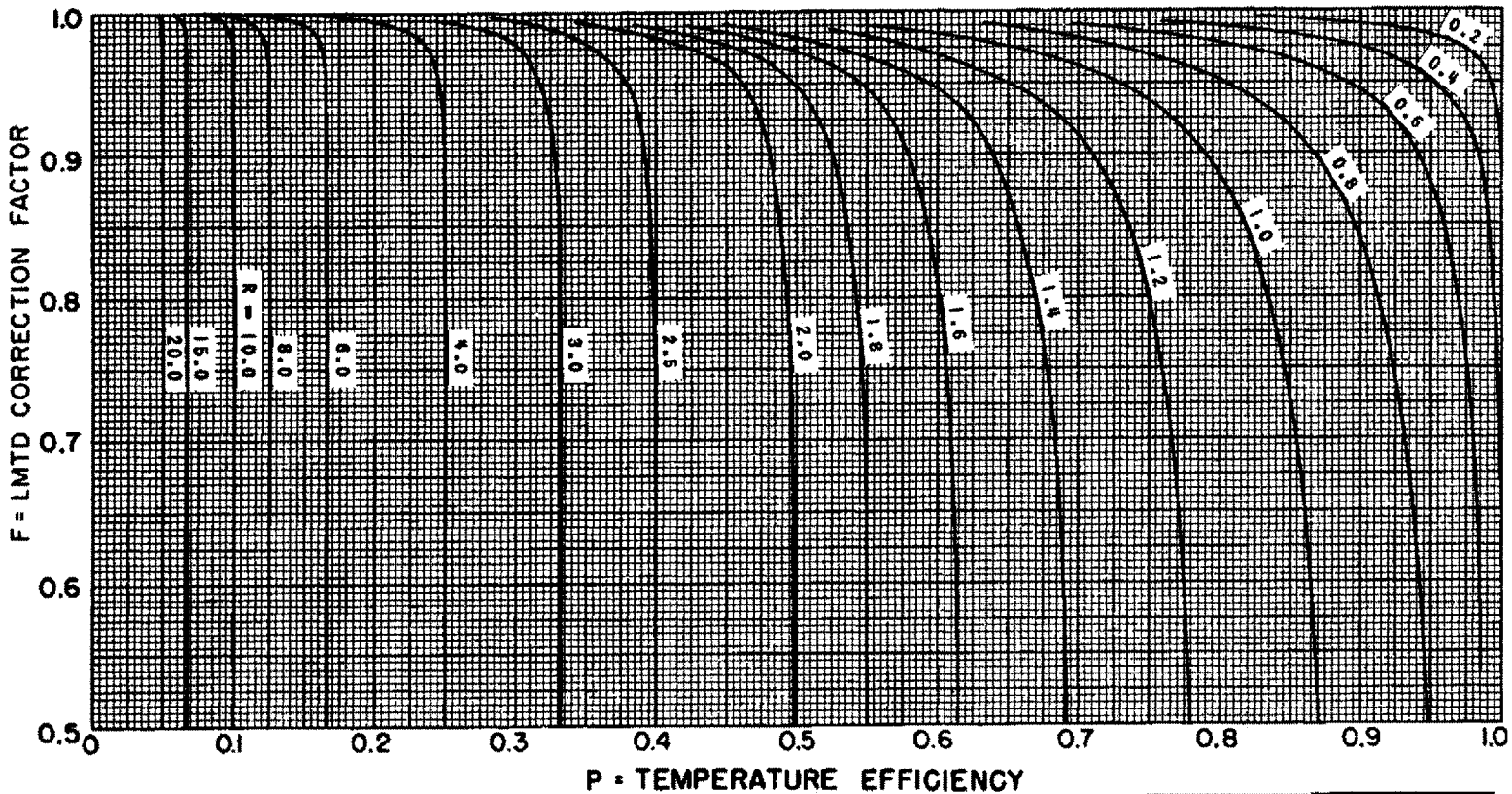

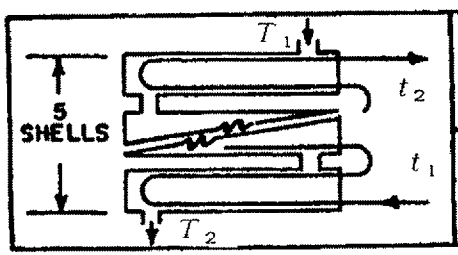

LMTD CORRECTION FACTOR

5 SHELL PASSES 10 OR MORE EVEN NUMBER OF TUBE PASSES

$$P = \frac{t_2 - t_1}{T_1 - t_1} \qquad R = \frac{T_1 - T_2}{t_2 - t_1}$$

©Tubular Exchanger Manufacturers Association, Inc.

FIGURE T-3.2F

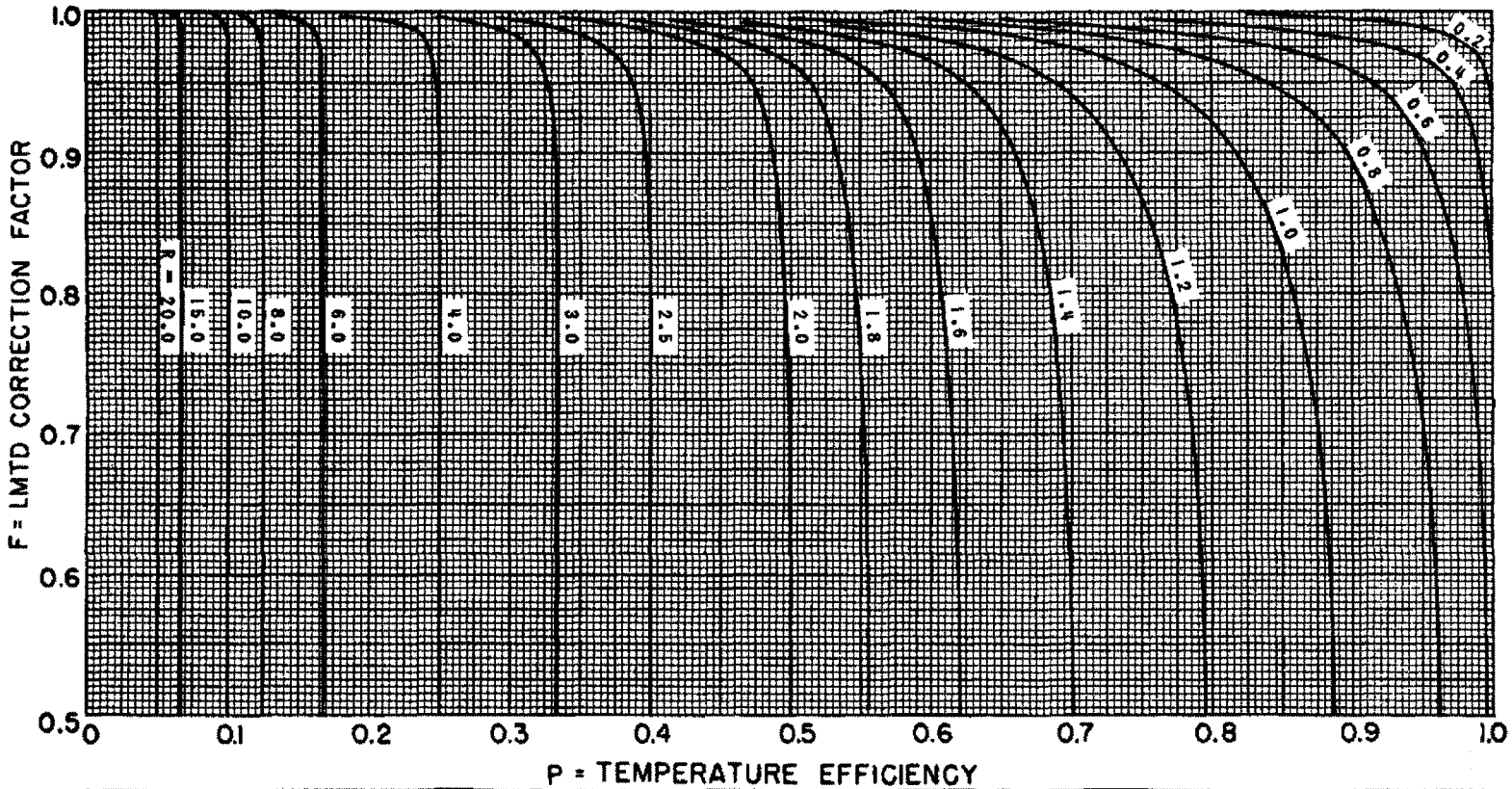

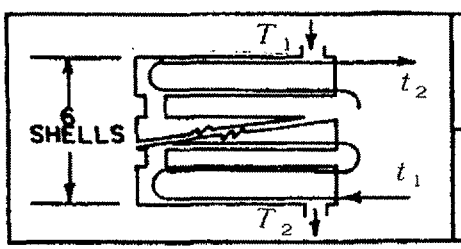

LMTD CORRECTION FACTOR

6 SHELL PASSES 12 OR MORE EVEN NUMBER OF TUBE PASSES

$$P = \frac{t_2 - t_1}{T_1 - t_1} \qquad R = \frac{T_1 - T_2}{t_2 - t_1}$$

©Tubular Exchanger Manufacturers Association, Inc.

FIGURE T-3.2G

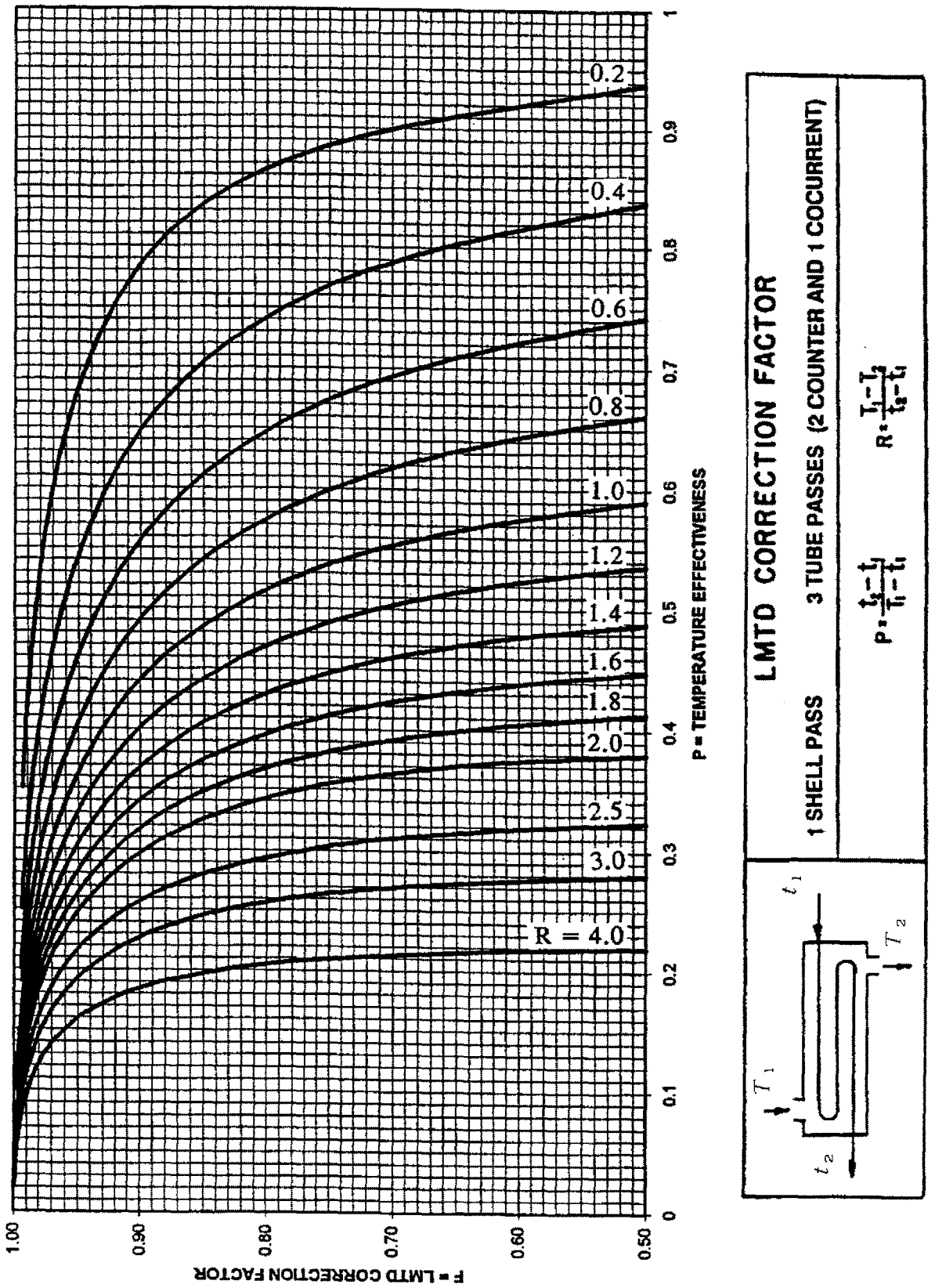

©Tubular Exchanger Manufacturers Association, Inc.

FIGURE T-3.2H

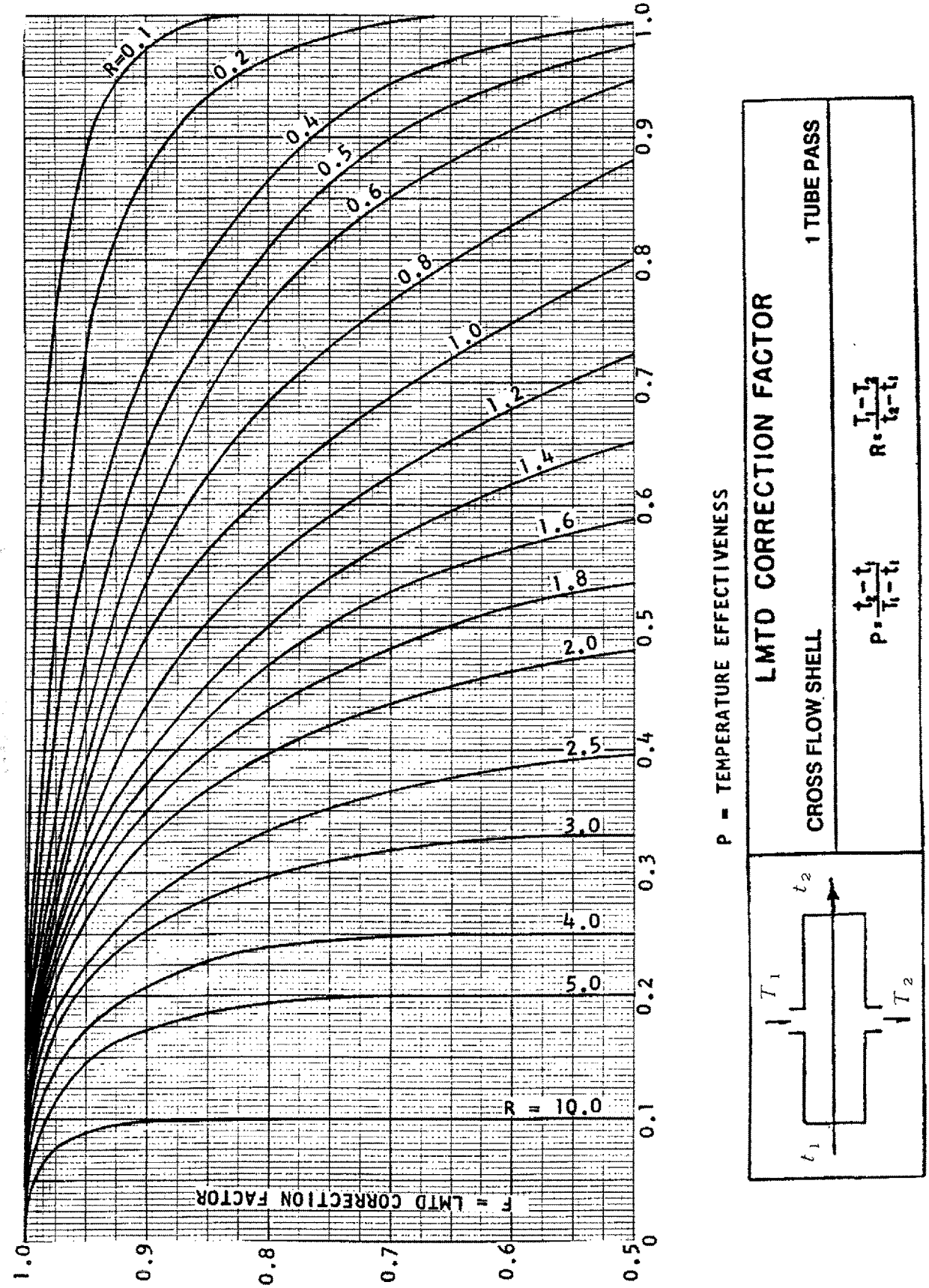

 ©Tubular Exchanger Manufacturers Association, Inc.

FIGURE T-3.2I

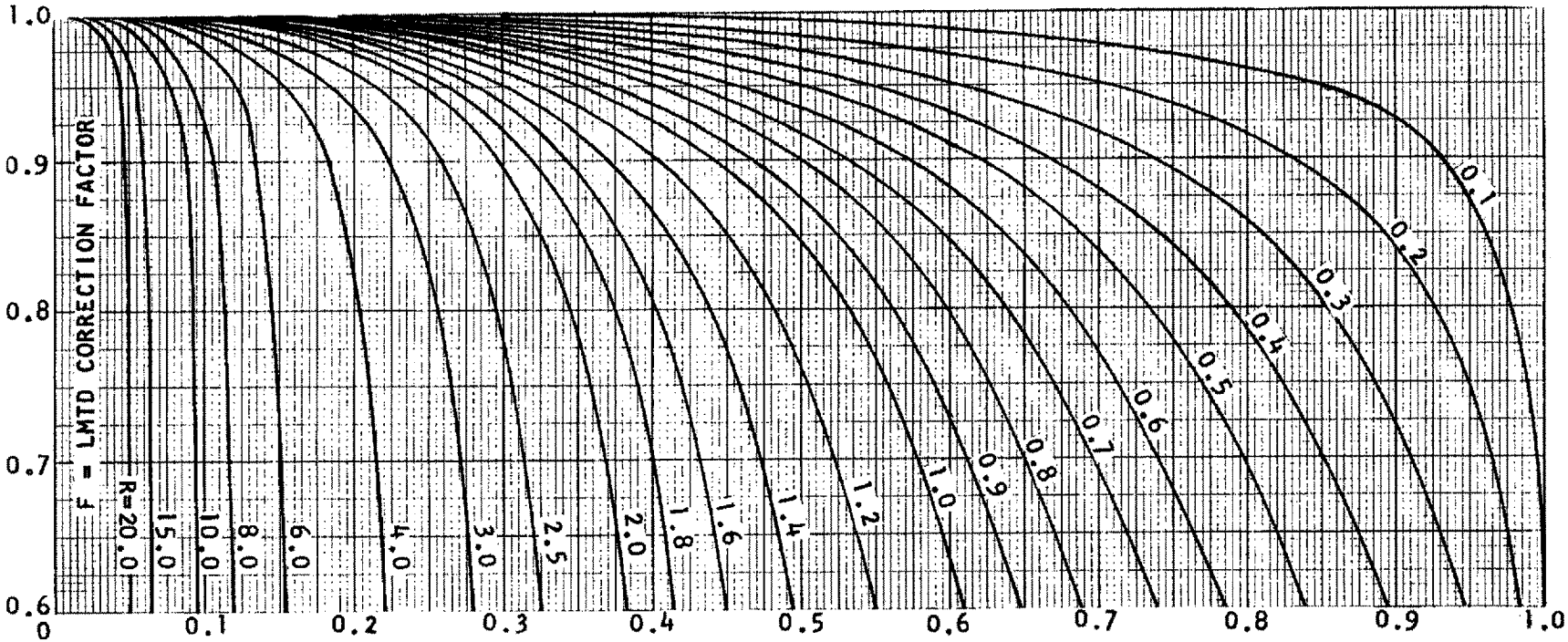

P = TEMPERATURE EFFECTIVENESS

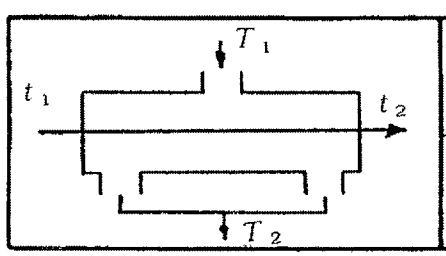

LMTD CORRECTION FACTOR

1 DIVIDED FLOW SHELL PASS — 1 TUBE PASS

$$P = \frac{t_2 - t_1}{T_1 - t_1} \qquad R = \frac{T_1 - T_2}{t_2 - t_1}$$

©Tubular Exchanger Manufacturers Association, Inc.

FIGURE T-3.2J

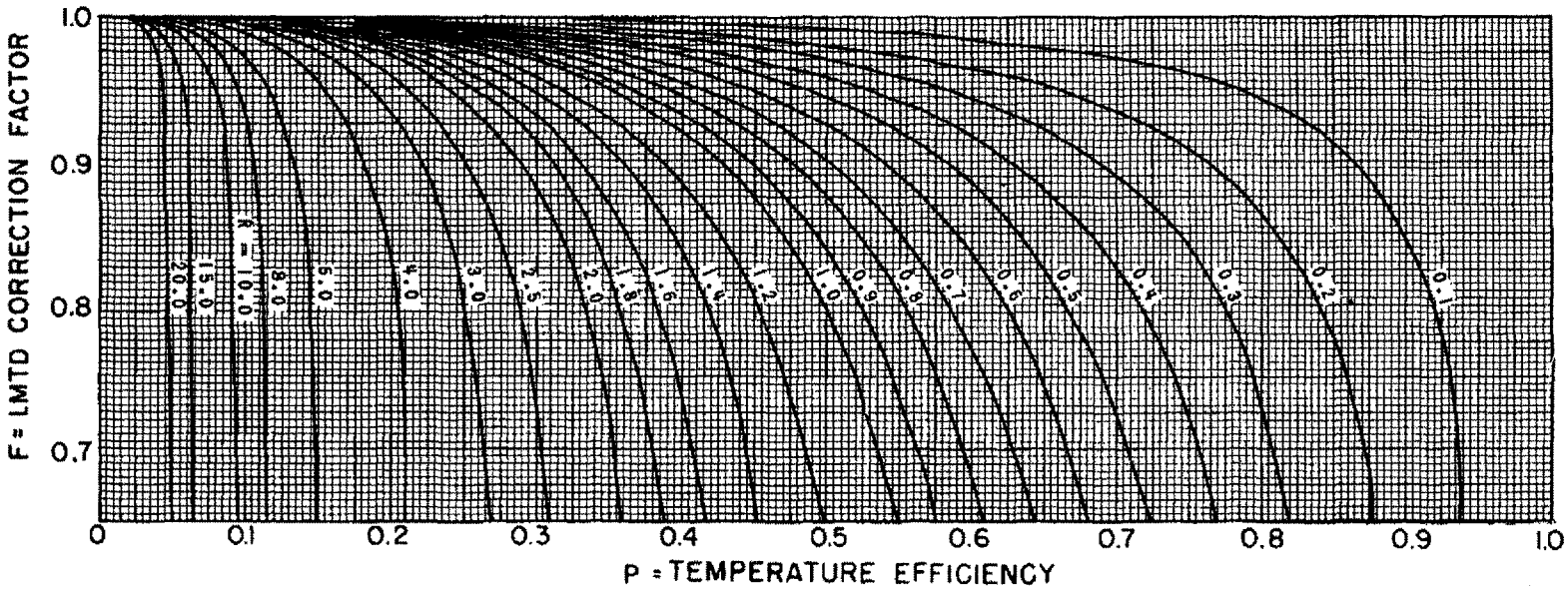

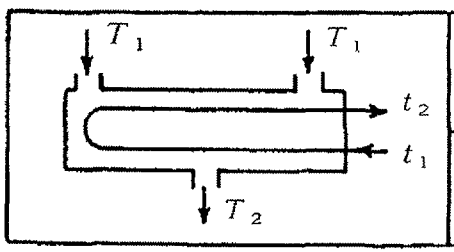

LMTD CORRECTION FACTOR

1 DIVIDED FLOW SHELL PASS EVEN NUMBER OF TUBE PASSES

$$P = \frac{t_2 - t_1}{T_1 - t_1} \qquad R = \frac{T_1 - T_2}{t_2 - t_1}$$

©Tubular Exchanger Manufacturers Association, Inc.

FIGURE T-3.2K

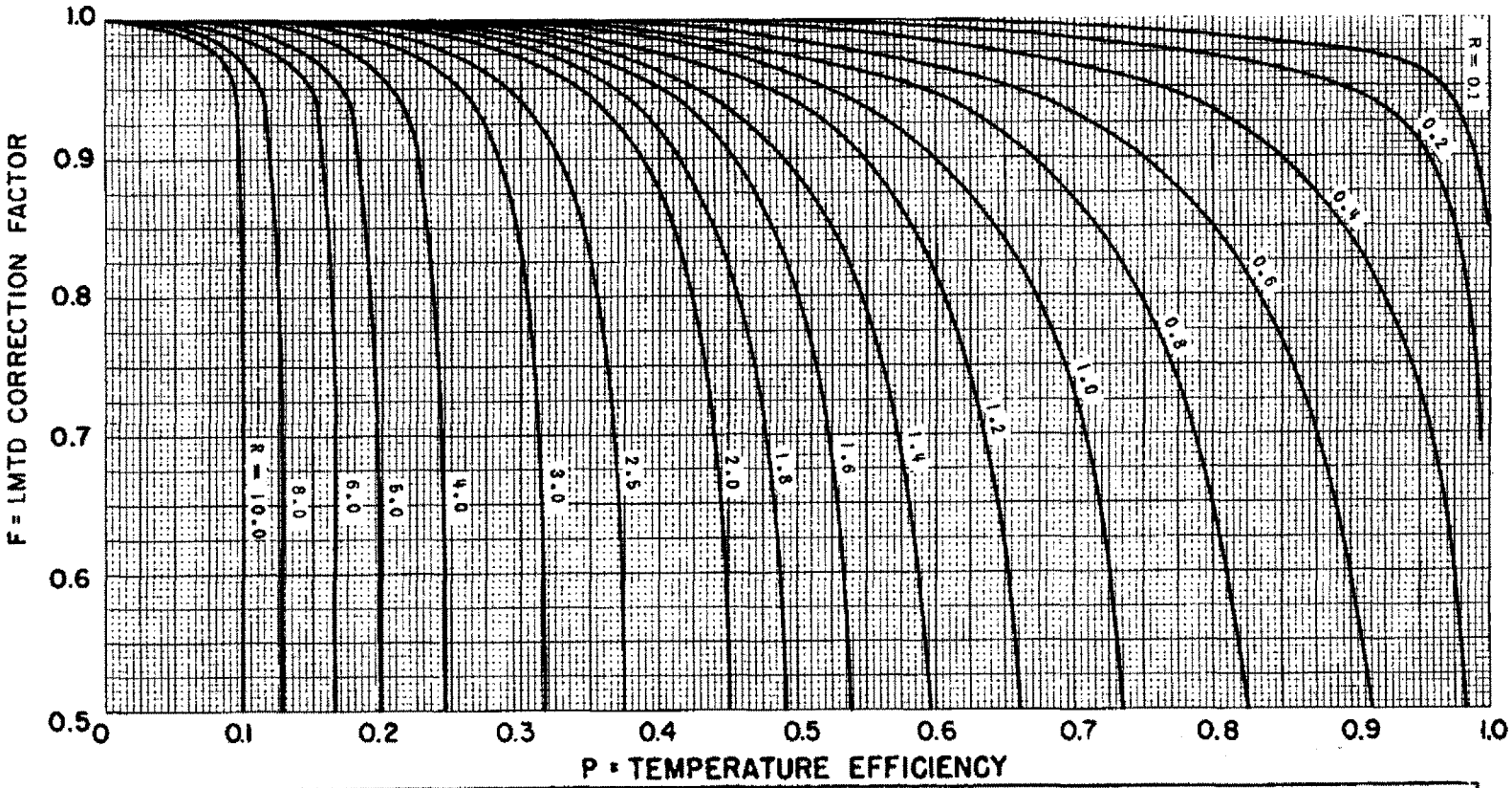

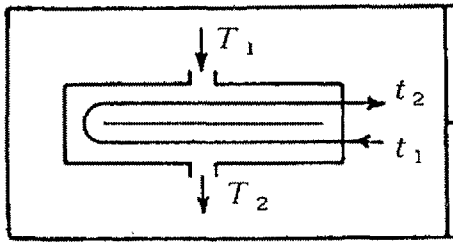

LMTD CORRECTION FACTOR

SPLIT FLOW SHELL — 2 TUBE PASSES

$$P = \frac{t_2 - t_1}{T_1 - t_1} \qquad R = \frac{T_1 - T_2}{t_2 - t_1}$$

©Tubular Exchanger Manufacturers Association, Inc.

FIGURE T-3.2L

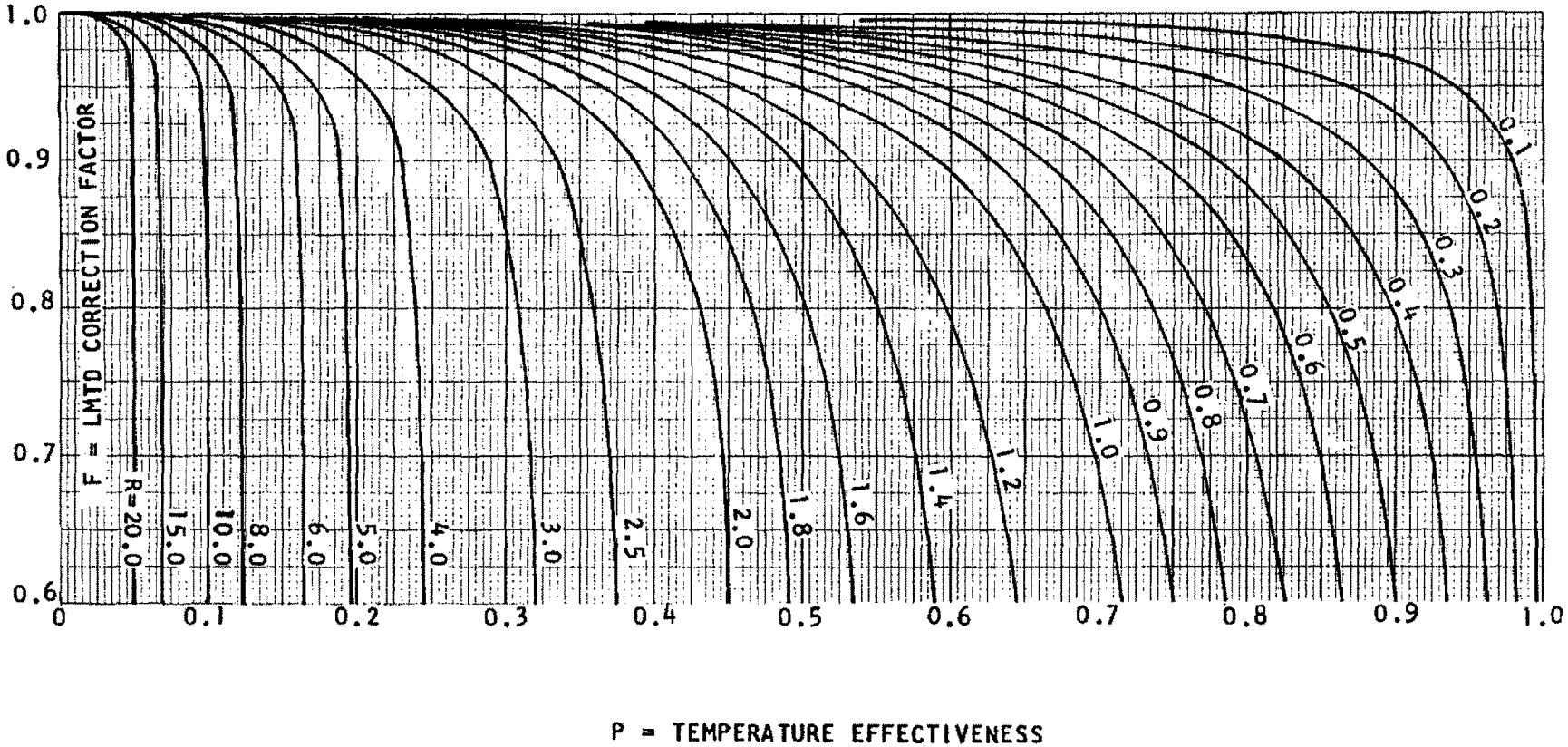

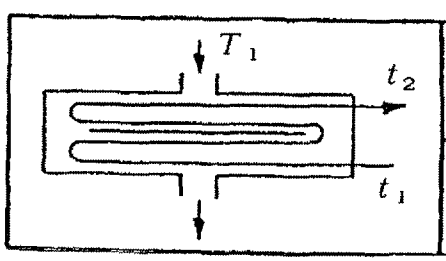

LMTD CORRECTION FACTOR

SPLIT FLOW SHELL — 4 (OR MULTIPLE OF 4) TUBE PASSES

$$P = \frac{t_2 - t_1}{T_1 - t_1} \qquad R = \frac{T_1 - T_2}{t_2 - t_1}$$

©Tubular Exchanger Manufacturers Association, Inc.

FIGURE T-3.2M

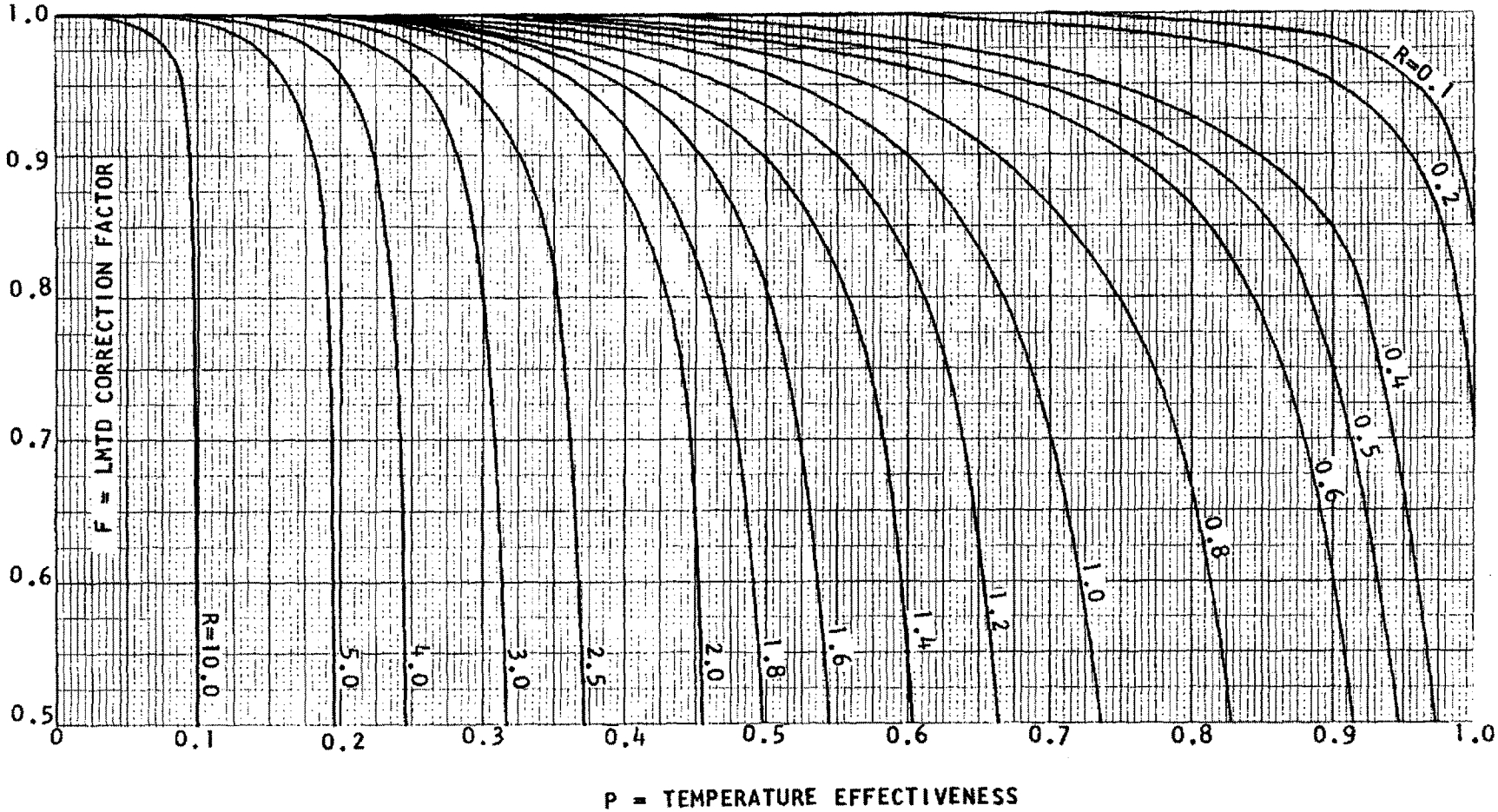

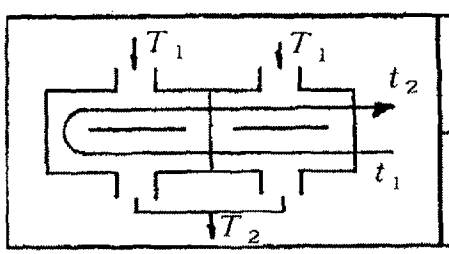

LMTD CORRECTION FACTOR

DOUBLE SPLIT FLOW SHELL — **2 TUBE PASSES**

$$P = \frac{t_2 - t_1}{T_1 - t_1} \qquad R = \frac{T_1 - T_2}{t_2 - t_1}$$

©Tubular Exchanger Manufacturers Association, Inc.

FIGURE T-3.3A

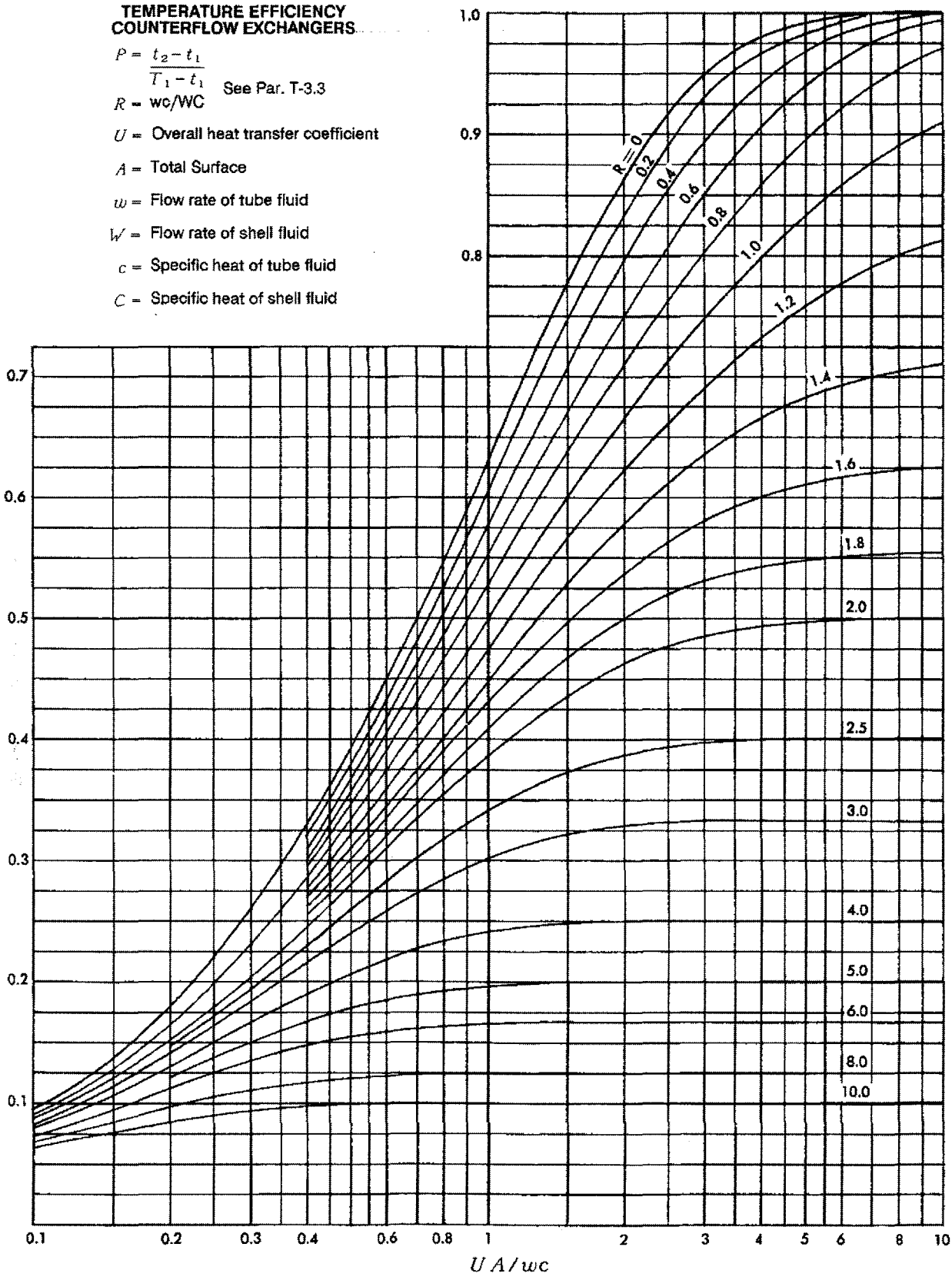

 ©Tubular Exchanger Manufacturers Association, Inc.

FIGURE T-3.3B

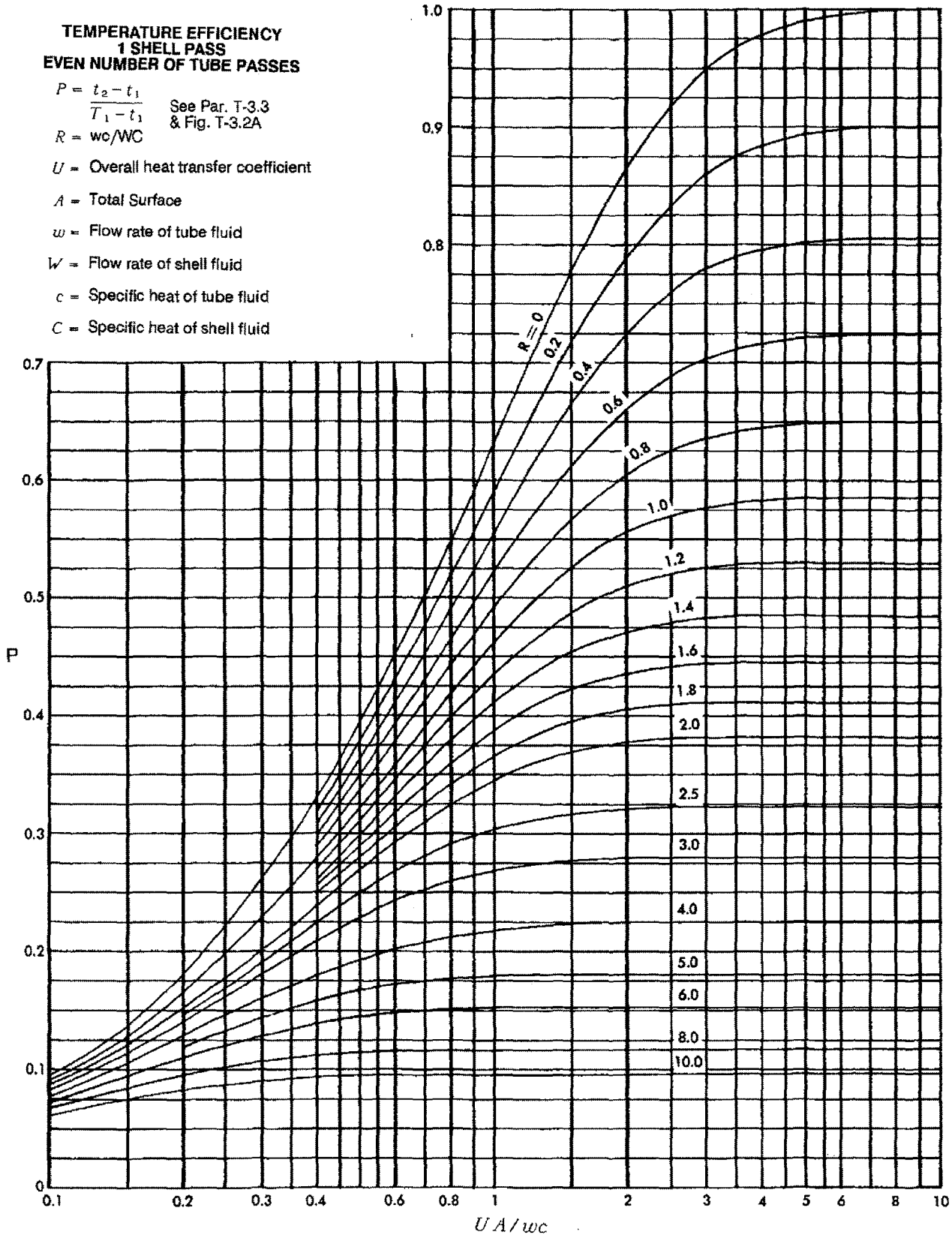

 ©Tubular Exchanger Manufacturers Association, Inc.

FIGURE T-3.3C

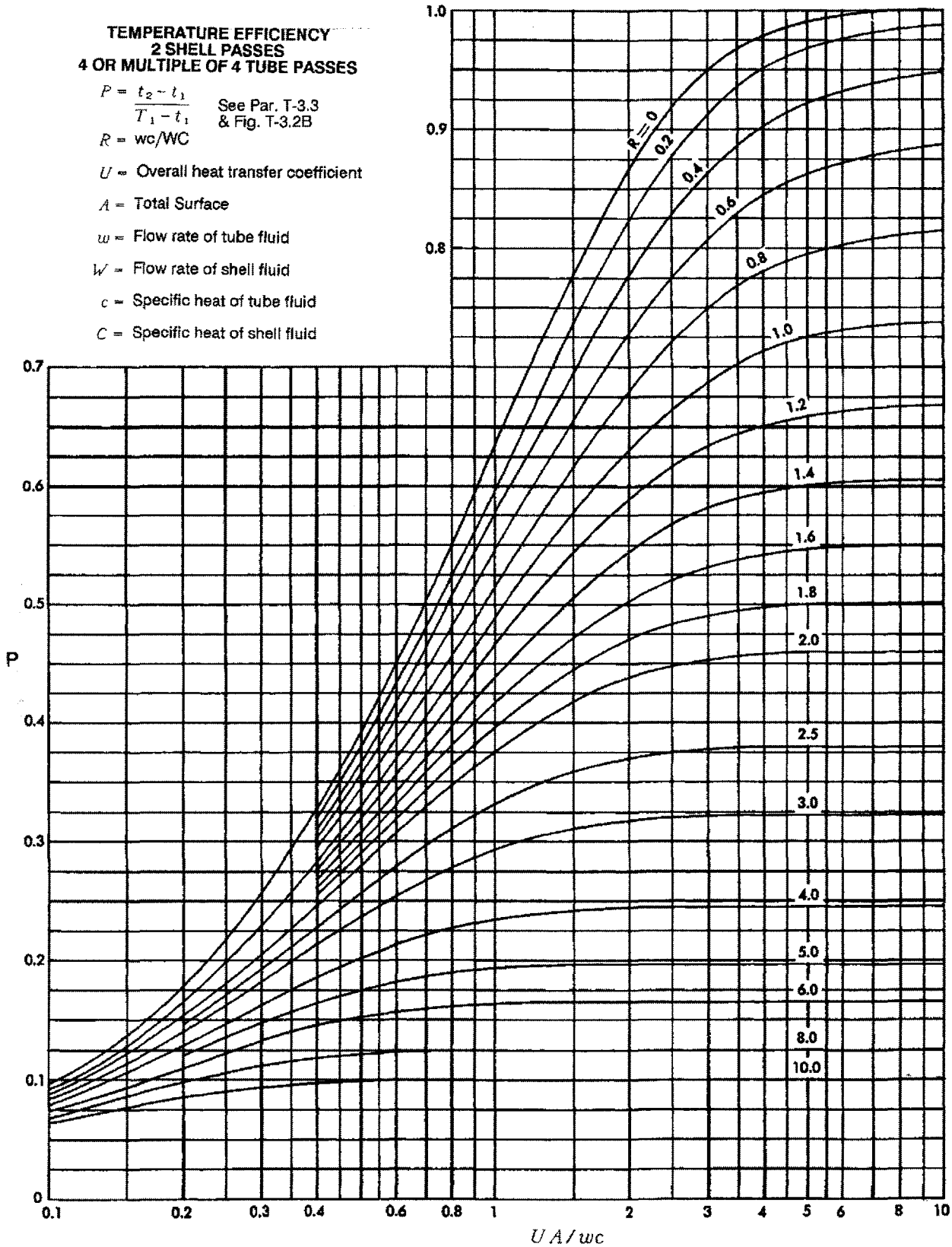

 ©Tubular Exchanger Manufacturers Association, Inc.

This page intentionally blank

©Tubular Exchanger Manufacturers Association, Inc.

(Note: This section is not metricated)

P-1 FLUID DENSITY

P-1.1 SPECIFIC GRAVITY OF LIQUID PETROLEUM FRACTIONS

The specific gravities of liquid petroleum fractions and saturated light hydrocarbons are shown in Figure P-1.1.

P-1.2 DENSITY OF ORGANIC LIQUIDS

The general density nomograph Fig. P-1.2 permits the approximation of the density of organic liquids at temperatures between -150 °F and +500 °F, if densities at two temperatures are known. Table P-1.2 lists the coordinates on the center grid for locating the reference points for 65 compounds. The reference point for a substance may be determined if the density is known for two different temperatures. The intersection point of the two straight lines joining the corresponding values of the known temperatures and densities is the desired reference point of the substance.

P-1.3 COMPRESSIBILITY FACTORS FOR GASES AND VAPORS

The $P-\upsilon-T$ relationships for gases and vapors may conveniently be expressed by the equation $P\upsilon = ZRT$, where P is the absolute pressure, υ is the specific volume, T is the absolute temperature, R is a constant which may be found by dividing the universal gas constant R by the molecular weight of the gas, and Z is the compressibility factor. Z has the value of unity for an ideal gas under all conditions and, therefore, is a measure of the extent of the deviation of a real gas or vapor from the ideal state. Figures P-1.3A, P-1.3B, and P-1.3C are generalized plots of compressibility factor as a function of reduced pressure, P/P_c, and reduced temperature, T/T_c.

The dotted curves represent constant values of the pseudo-reduced volume $\upsilon_r' = \upsilon/(RT_c/P_c)$ where the subscript c refers to the critical value. These may be used to calculate pressure (or temperature) when the temperature (or pressure) and specific volume are known. If P is expressed in pounds per square inch, υ in cubic feet per pound, and T in degrees Rankine, the numerical value of R is 10.73. For critical property data, see Paragraph P-6.

P-2 SPECIFIC HEAT

P-2.1 LIQUID PETROLEUM FRACTIONS

The specific heats of liquid petroleum fractions of various API gravities are shown as functions of temperature in Figure P-2.1. The specific heat versus temperature lines shown apply to virgin mid-continent stock and must be corrected for other stocks. An inset curve of this correction factor versus characterization factor is provided.

P-2.2 PETROLEUM VAPORS

The specific heats of petroleum vapors of various characterization factors are shown as functions of temperature in Figure P-2.2.

P-2.3 PURE HYDROCARBON GASES

The low pressure specific heats of a number of pure hydrocarbons are shown as functions of temperature in Figures P-2.3A, P-2.3B, and P-2.3C.

P-2.4 MISCELLANEOUS LIQUIDS AND GASES

The specific heats of miscellaneous liquids and gases at various temperatures may be read from the alignment charts, Figures P-2.4A and P-2.4B.

P-2.5 GASES AND VAPORS AT ELEVATED PRESSURES

Specific heat data in Figures P-2.2, P-2.3A, P-2.3C and P-2.4B apply only at pressures low enough so that the specific heats are not significantly affected by pressure changes. At higher pressures, the specific heats may be substantially higher than the low pressure values. Figure P-2.5 is a generalized chart which may be used to calculate the approximate correction to the low pressure specific heat for any gas at high pressure. The isothermal change in molal specific heat, $\Delta C_P = C_P - C_P{}^*$, is plotted against reduced pressure, P_r, with reduced temperature, T_r, as a

 ©Tubular Exchanger Manufacturers Association, Inc.

parameter. Outside the range of the chart, the following empirical equations are accurate enough for most practical purposes. For $T_r > 1.2$ and $\Delta C_p < 2$, $\Delta C_p = 5.03 P_r / T_r^3$ for $T_r < 1.2$ and $\Delta C_p < 2.5, \Delta C_p = 9 P_r / T_r^6$. For critical property data, see Paragraph P-6.1 and P-6.2.

P-3 HEAT CONTENT

Heat content of petroleum fractions, including the effect of pressure, are shown as functions of temperature and API gravity for various UOP K values in Figure P-3.1.
The latent heats of vaporization of various liquids may be estimated by the use of Figure P-3.2. The recommended range of use is indicated for the compounds listed.
See Table P-3.3 for heat capacity ratios for various gases.

P-4 THERMAL CONDUCTIVITY

P-4.1 CONVERSION OF UNITS

Table D-15 gives factors for converting thermal conductivity values from one set of units to another.

P-4.2 HYDROCARBON LIQUIDS

The thermal conductivities of liquid normal paraffinic hydrocarbons are shown in Figure P-4.2.

P-4.3 MISCELLANEOUS LIQUIDS AND GASES

Tables P-4.3A and P-4.3B give tabulated values of thermal conductivity for a number of liquids and gases at atmospheric pressure.

P-4.4 GASES AND LIQUIDS AT ELEVATED PRESSURES

Thermal conductivity for gases at elevated pressure can be corrected by the use of Figure P-4.4A. Thermal conductivity for liquids at elevated pressure can be corrected by the use of Figure P-4.4B. This chart is intended for use above 500 psia and when T / T_c is less than 0.95.

P-5 VISCOSITY

P-5.1 VISCOSITY CONVERSION

A viscosity conversion plot, Figure P-5.1, provides a means of converting viscosity from Saybolt, Redwood or Engler time to kinematic viscosity in centistokes. The absolute viscosity in centipoises may be determined by multiplying the kinematic viscosity in centistokes by the specific gravity. Table D-15 gives factors for converting viscosity values to various systems of units.

P-5.2 PETROLEUM OILS

The viscosities of petroleum oils having Watson and Nelson (UOP) characterization factors of 10.0, 11.0, 11.8 and 12.5 are shown plotted against temperatures in Figures P-5.2A, P-5.2B, P-5.2C and P-5.2D.

P-5.3 LIQUID PETROLEUM FRACTIONS

Figures P-5.3A and P-5.3B give viscosity data for a number of typical petroleum fractions plotted as straight lines on ASTM viscosity charts. These charts are so constructed that for any given petroleum oil the viscosity-temperature points lie on a straight line. They are, therefore, a convenient means for determining the viscosity of a petroleum oil at any temperature, provided viscosities at two temperatures are known. Streams of similar API gravity may have widely different viscosities; therefore, values of viscosity shown here should be considered as typical only.

P-5.4 MISCELLANEOUS LIQUIDS AND GASES

The viscosities of certain liquids are shown as functions of temperature in Figure P-5.4A. The viscosities of certain gases and vapors at one atmosphere pressure are given by Figure P-5.4B.

P-5.5 EFFECT OF PRESSURE ON GAS VISCOSITY

Figure P-5.5 is a generalized chart which may be used to estimate the viscosities of gases and vapors at elevated pressure if the critical temperature and pressure and the viscosity at low pressure are known. The viscosity ratio, μ_p / μ_{atm}, is plotted against reduced pressure, P_r, with

 ©Tubular Exchanger Manufacturers Association, Inc.

reduced temperature, T_r, as a parameter, where, μ_{atm} and μ_p are respectively the viscosities at atmospheric pressure and at pressure P. For critical property data, see Paragraph P-6.

P-6 CRITICAL PROPERTIES

P-6.1 PURE SUBSTANCES

Table P-6.1 gives values of the molecular weights, critical temperatures, and critical pressures for a variety of pure compounds. For the calculation of compressibility factor, it is recommended that the critical pressures and temperatures of hydrogen, helium, and neon be increased by 118 psi and 14.4 °R respectively.

P-6.2 GAS AND VAPOR MIXTURES

Figures P-1.3, P-2.5, and P-5.5 may be used to estimate the properties of gas mixtures as well as pure substances if pseudo-critical properties are used in place of the critical values. The pseudo-critical temperature and pressure are defined as follows:

$$T_{p.c.} = Y_1\ T_{c1} + Y_2\ T_{c2} + \ldots\ldots\ldots + Y_n\ T_{cn}$$

$$P_{p.c.} = Y_1\ P_{c1} + Y_2\ \mathrm{P}_{c2} + \ldots\ldots\ldots +\ Y_n\ P_{cn}$$

where Y_1 , Y_2 etc. are the mole fractions of the individual components and T_{c1}, T_{c2} etc., and P_{c1}, P_{c2}, etc., are their critical temperatures and pressures.

P-7 PROPERTIES OF GAS AND VAPOR MIXTURES

To estimate properties of a gas or vapor mixture for which the individual component fractions and properties are known, the following formulas may be used:

P-7.1 SPECIFIC HEAT

$$C_{pmix} = X_1 C_{p1} + X_2 C_{p2} + \ldots\ldots\ldots\ldots + X_N C_{pN}$$

P-7.2 THERMAL CONDUCTIVITY

$$K_{mix} = \frac{K_1 Y_1 (M_1)^{1/3} + K_2 Y_2 (M_2)^{1/3} + \ldots.. + K_N Y_N (M_N)^{1/3}}{Y_1 (M_1)^{1/3} + Y_2 (M_2)^{1/3} + \ldots.. + Y_N (M_N)^{1/3}}$$

P-7.3 VISCOSITY

$$\mu_{mix} = \frac{\mu_1 Y_1 (M_1)^{1/2} + \mu_2 Y_2 (M_2)^{1/2} + \ldots.. + \mu_N Y_N (M_N)^{1/2}}{Y_1 (M_1)^{1/2} + Y_2 (M_2)^{1/2} + \ldots.. + Y_N (M_N)^{1/2}}$$

where, for component "N":

X_N = Weight Fraction

Y_N = Mole Fraction

M_N = Molecular Weight

C_{pN} = Specific Heat

K_N = Thermal Conductivity

μ_N = Viscosity

 ©Tubular Exchanger Manufacturers Association, Inc.

P-8 SELECTED REFERENCES

(1) Reid, R. C. and Sherwood, T. K., "Properties of Gases and Liquids", 2nd Ed., McGraw-Hill Book Company, Inc., New York, 1966.

(2) Comings, E. W., "High Pressure Technology", McGraw-Hill Book Company, Inc., New York, 1956.

(3) Hougen, O. A., Watson, K. M., Ragatz, R. A., "Chemical Process Principles", Part 1, 2nd Ed., John Wiley & Sons, Inc., New York, 1956.

(4) Tsederberg, N. V., "Thermal Conductivities of Gases and Liquids", The M.I.T. Press, Massachusetts Institute of Technology, Cambridge, Massachusetts, 1965.

(5) Yaws, C. L., "Physical Properties, Chemical Engineering", McGraw-Hill Book Company, Inc., New York, 1977.

(6) Gallant, R. W., "Physical Properties of Hydrocarbons", Vol. 1 & 2, Gulf Publishing Co., Houston, Texas, 1968.

 ©Tubular Exchanger Manufacturers Association, Inc.

FIGURE P-1.1

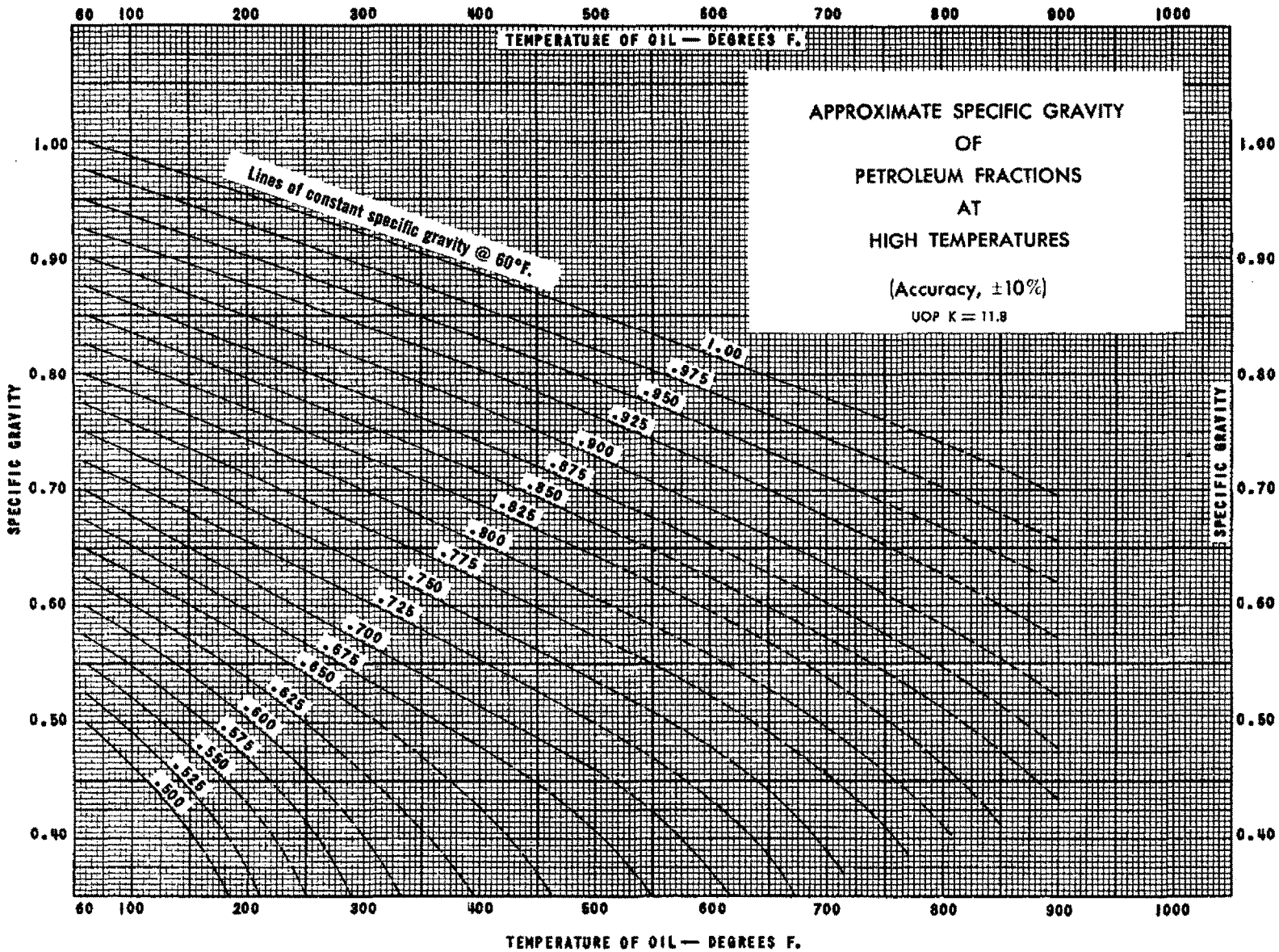

©Tubular Exchanger Manufacturers Association, Inc.

FIGURE P-1.2

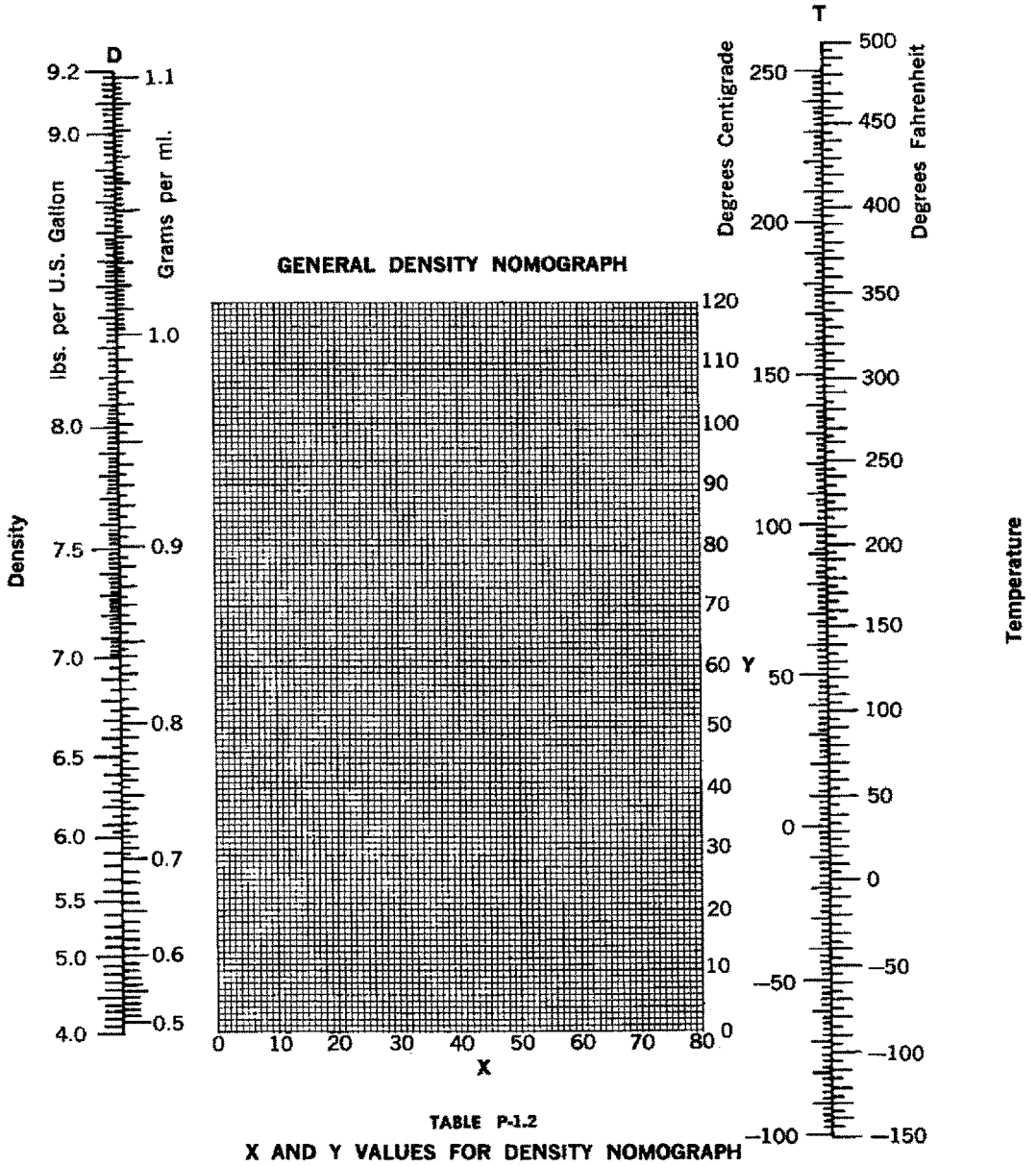

TABLE P-1.2
X AND Y VALUES FOR DENSITY NOMOGRAPH

Compound	X	Y	Compound	X	Y	Compound	X	Y
Acetic Acid	40.6	93.5	Ethyl chloride	42.7	62.4	Methyl sulfide	31.9	57.4
Acetone	26.1	47.8	Ethylene	17.0	3.5	n-Nonane	16.2	36.5
Acetonitrile	21.8	44.9	Ethyl ether	22.6	35.8	n-Octadecane	16.2	46.5
Acetylene	20.8	10.1	Ethyl formate	37.6	68.4	n-Octane	12.7	32.5
Ammonia	22.4	24.6	Ethyl propionate	32.1	63.9	n-Pentadecane	15.8	44.2
Isoamyl alcohol	20.5	52.0	Ethyl propyl ether	20.0	37.0	n-Pentane	12.6	22.6
Ammine	33.5	92.5	Ethyl auindo	25.7	55.3	n-Nonadecane	14.9	47.0
Benzene	32.7	63.0	Fluorobenzene	41.9	87.6	Isopentane	13.5	22.5
n-Butyric acid	31.3	78.7	n-Heptadecane	15.6	45.7	Phenol	36.7	103.8
Isobutane	13.7	16.5	n-Heptane	12.6	29.8	Phosphine	28.0	22.1
Isobutyric acid	31.5	75.9	n-Hexadecane	15.8	45.0	Propane	14.2	12.2
Carbon dioxide	78.6	45.4	n-Hexane	13.5	27.0	Propionic acid	35.0	83.5
Chlorobenzene	41.7	105.0	Methanethiol	37.3	59.5	Piperidene	27.5	60.0
Cyclohexane	19.6	44.0	Methyl acetate	40.1	70.3	Propionitrile	20.1	44.6
n-Decane	16.0	38.2	Methyl alcohol	25.8	49.1	Propyl acetate	33.0	65.5
n-Dedecane	14.3	41.4	Methyl n-butyrate	31.5	65.5	Propyl alcohol	23.8	50.8
Diethylamine	17.8	33.5	Methyl isobutyrate	33.0	64.1	Propyl formate	33.8	66.7
n-Elconane	14.8	47.5	Methyl chloride	52.3	62.9	n-Tetradecane	15.8	43.3
Ethane	10.8	4.4	Methyl ether	27.2	30.1	n-Tridecane	15.3	42.4
Ethanethiol	32.0	55.5	Methyl ethyl ether	25.0	34.4	Triethylamine	17.9	37.0
Ethyl acetate	35.0	95.0	Methyl formate	46.4	74.6	n-Undecane	14.4	39.2
Ethyl alcohol	24.2	48.6	Methyl propionate	36.5	68.3			

Ref: Othmer, Josefowitz & Schmutzler, Ind. Engr. Chem. Vol. 40,5,883-5

©Tubular Exchanger Manufacturers Association, Inc.

FIGURE P-1.3A

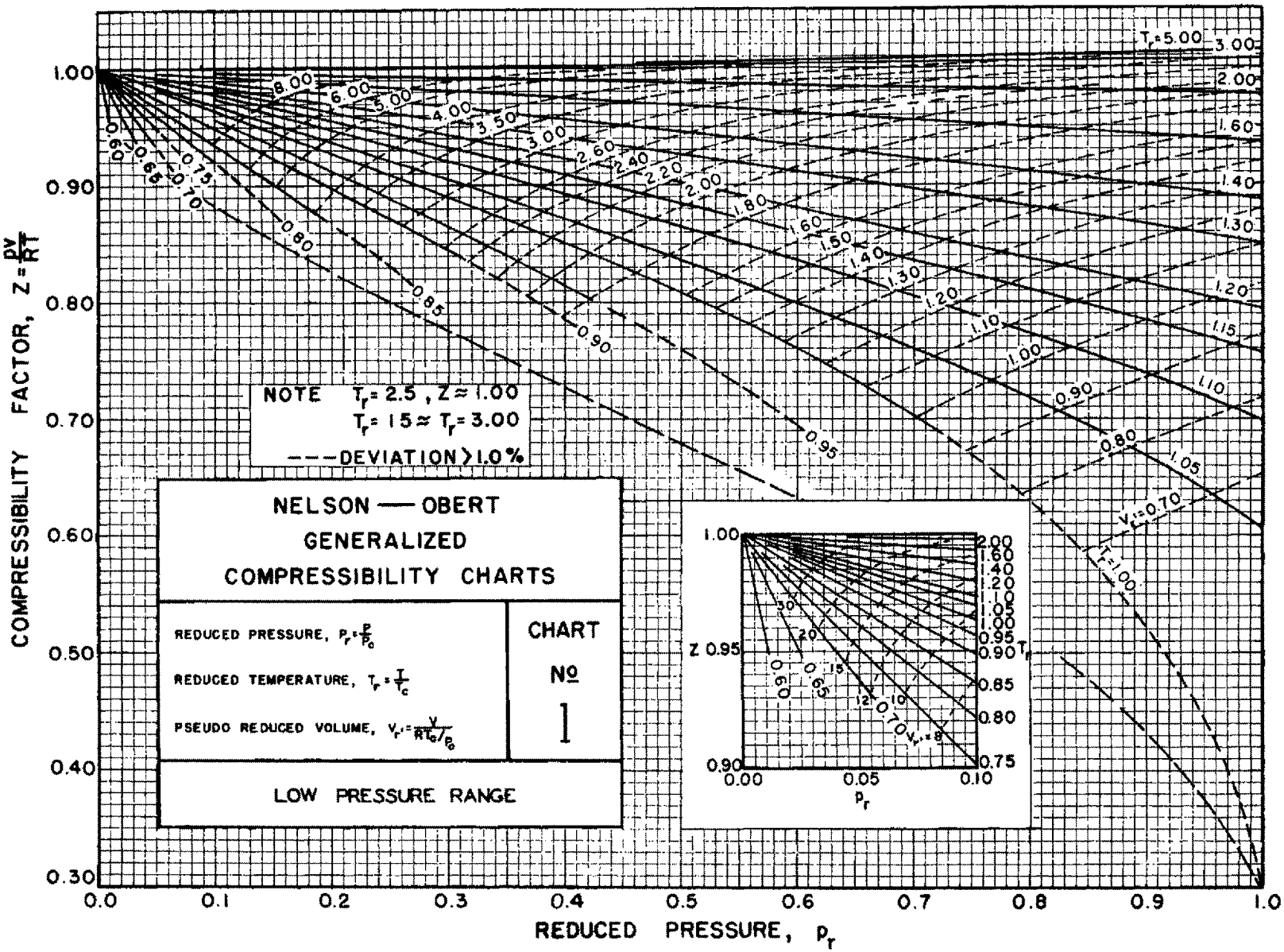
NELSON — OBERT
GENERALIZED
COMPRESSIBILITY CHARTS
REDUCED PRESSURE, $P_r = \frac{P}{P_c}$
REDUCED TEMPERATURE, $T_r = \frac{T}{T_c}$
PSEUDO REDUCED VOLUME, $V_r = \frac{V}{RT_c/P_c}$
CHART
No
1
LOW PRESSURE RANGE
NOTE $T_r = 2.5$, $Z \approx 1.00$
$T_r = 1.5 \approx T_r = 3.00$
---DEVIATION > 1.0%
COMPRESSIBILITY FACTOR, $Z = \frac{PV}{RT}$
REDUCED PRESSURE, P_r
$T_r = 5.00$
$V_r = 0.70$
$T_r = 1.00$
Z
T_r
P_r

FIGURE P-1.3B

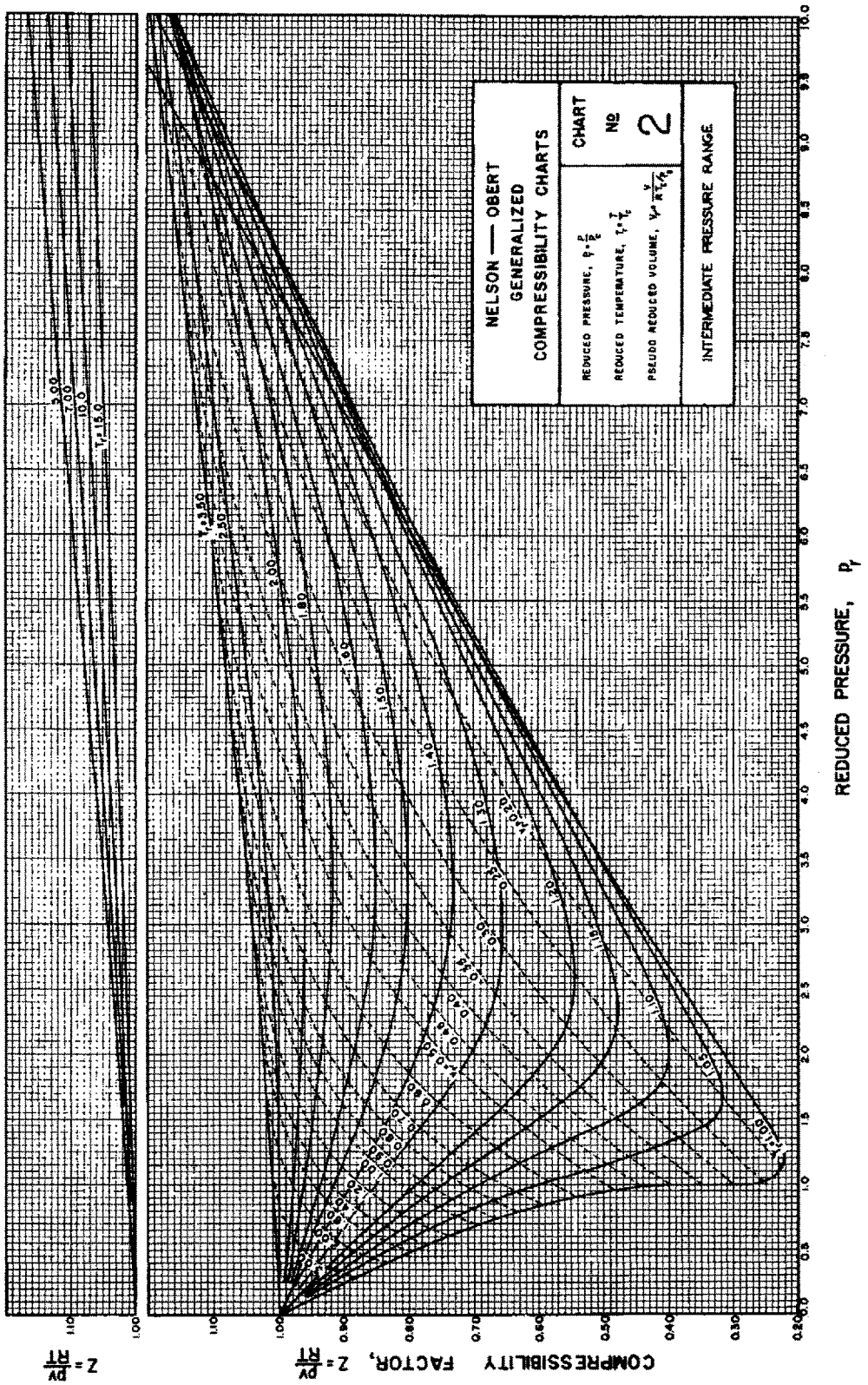

©Tubular Exchanger Manufacturers Association, Inc.

FIGURE P-1.3C

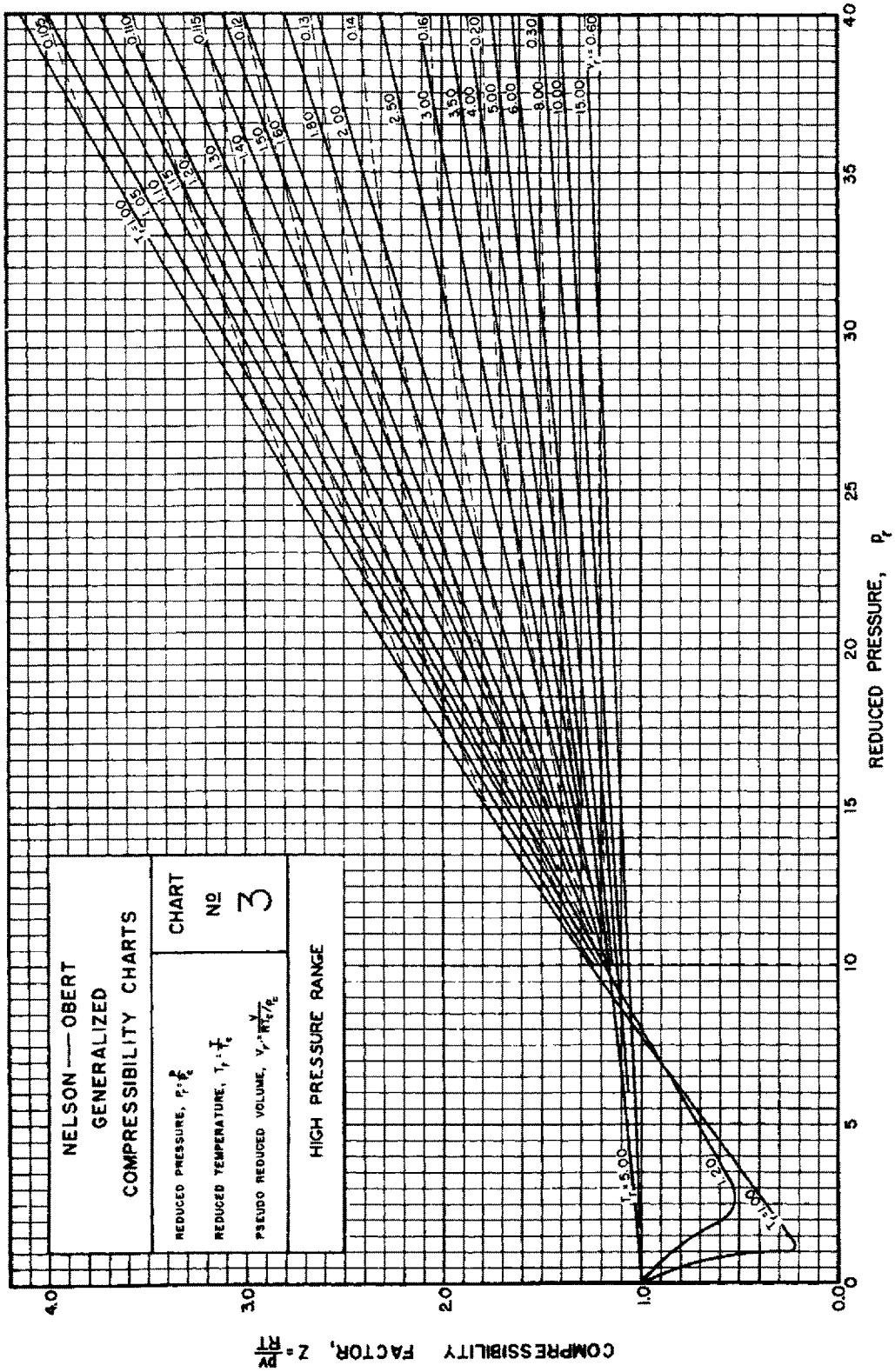
NELSON — OBERT
GENERALIZED
COMPRESSIBILITY CHARTS
REDUCED PRESSURE, $P_r = \frac{P}{P_c}$
REDUCED TEMPERATURE, $T_r = \frac{T}{T_c}$
PSEUDO REDUCED VOLUME, $V_r = \frac{V}{RT_c/P_c}$
CHART
Nº
3
HIGH PRESSURE RANGE
REDUCED PRESSURE, P_r
COMPRESSIBILITY FACTOR, $Z = \frac{PV}{RT}$
0.0
1.0
2.0
3.0
4.0
0
5
10
15
20
25
30
35
40
$T_r = 5.00$
$T_r = 2.00$
$T_r = 1.50$
$T_r = 1.40$
$T_r = 1.30$
$T_r = 1.20$
$T_r = 1.15$
$T_r = 1.10$
$T_r = 1.05$
$T_r = 1.00$
$V_r = 0.60$
15.00
10.00
8.00
6.00
5.00
4.00
3.50
3.00
2.50
2.00
1.80
1.60
1.50
1.40
1.30
1.20
1.15
1.10
1.05
0.30
0.20
0.16
0.14
0.13
0.12
0.115
0.110
0.105

FIGURE P-2.1

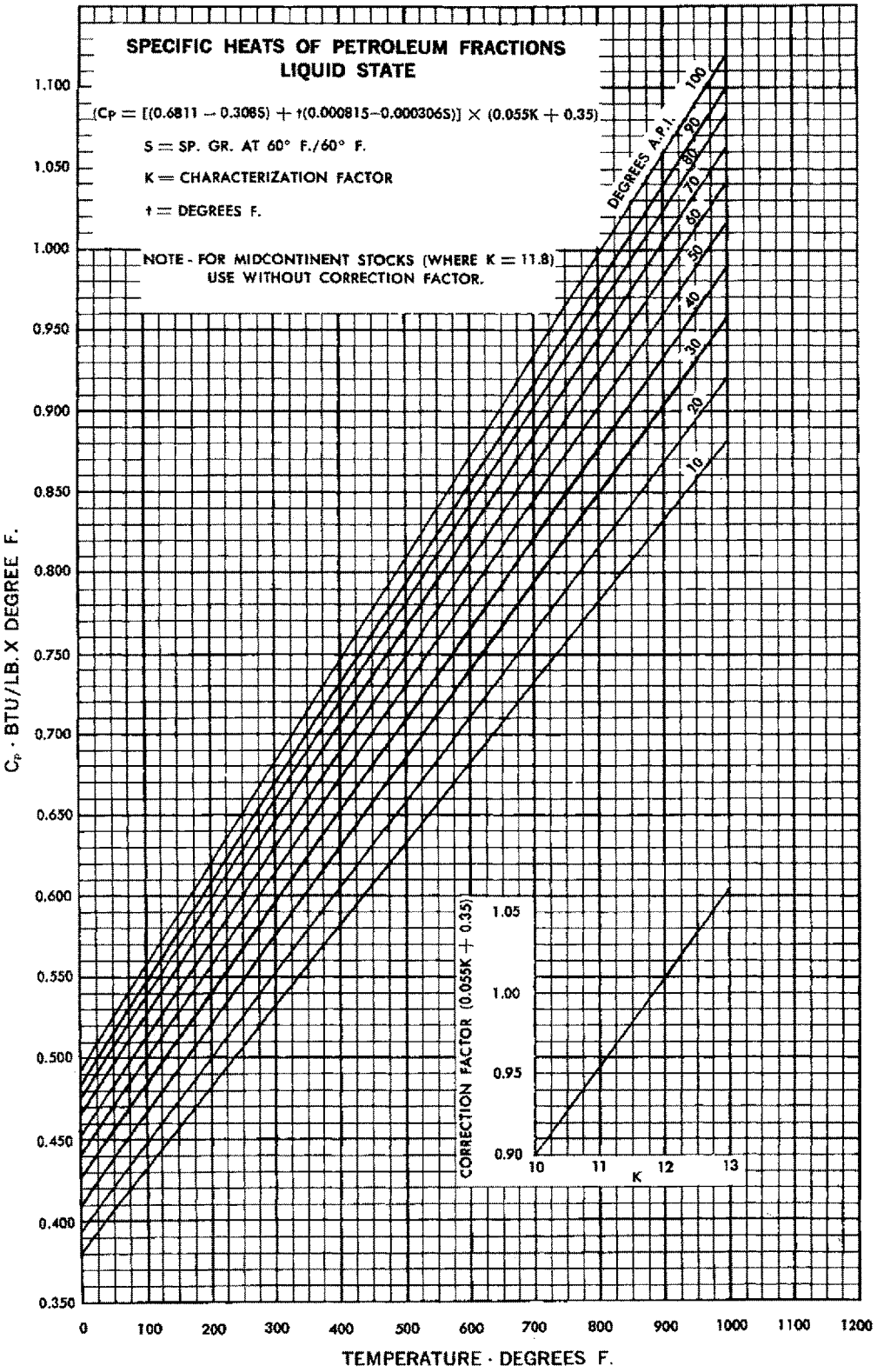

 ©Tubular Exchanger Manufacturers Association, Inc.

FIGURE P-2.2

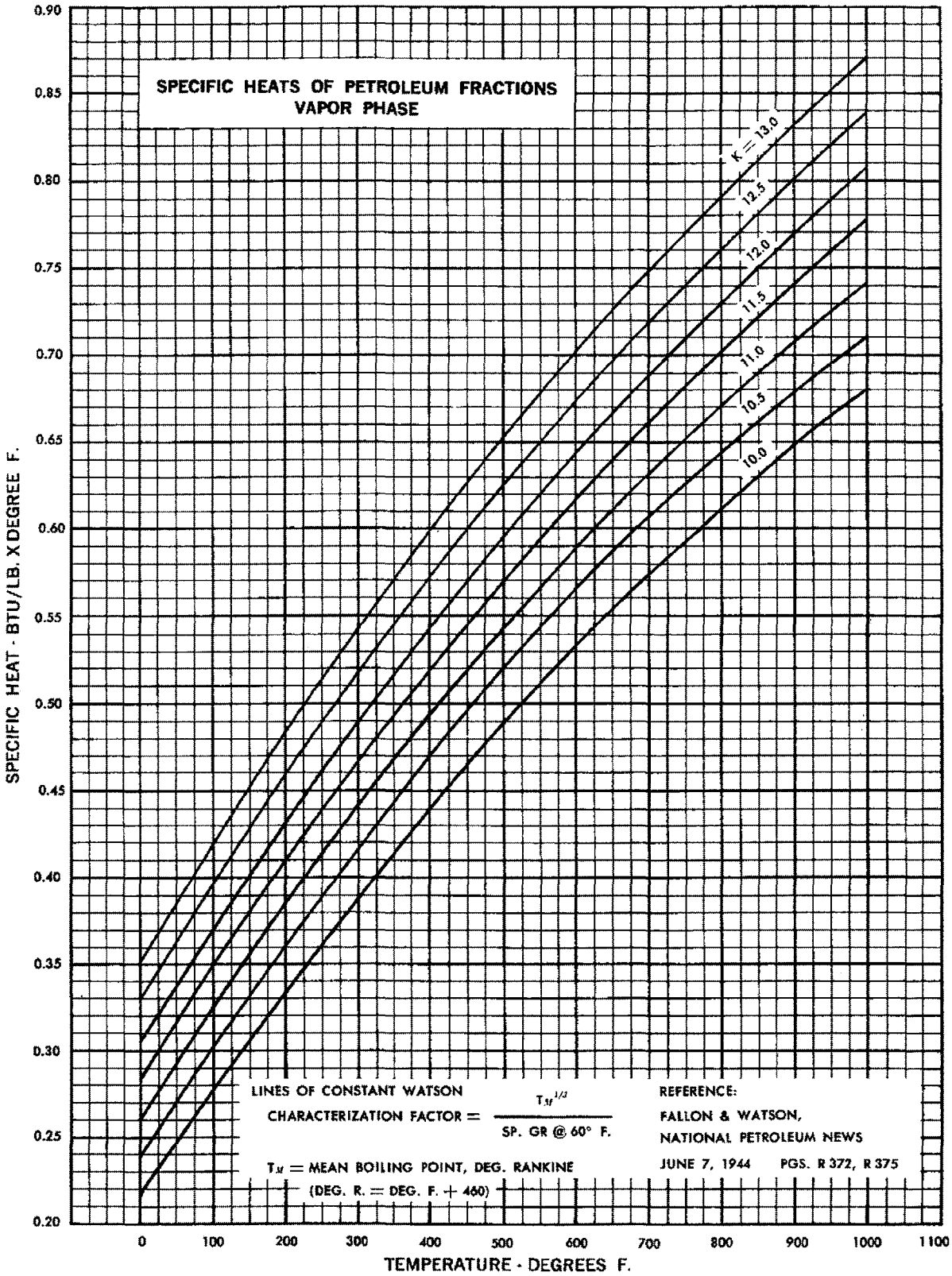

 ©Tubular Exchanger Manufacturers Association, Inc.

FIGURE P-2.3A

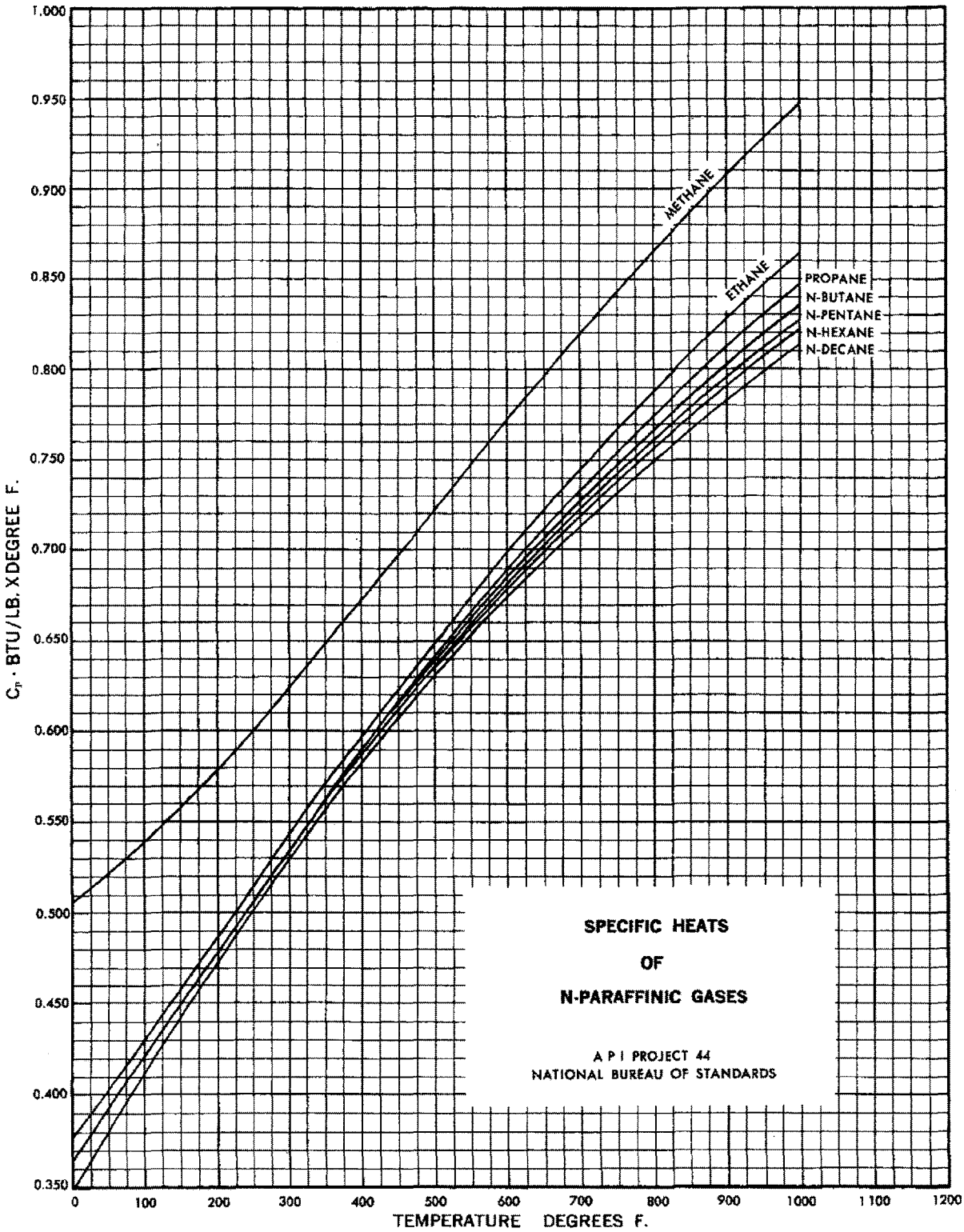

 ©Tubular Exchanger Manufacturers Association, Inc.

FIGURE P-2.3B

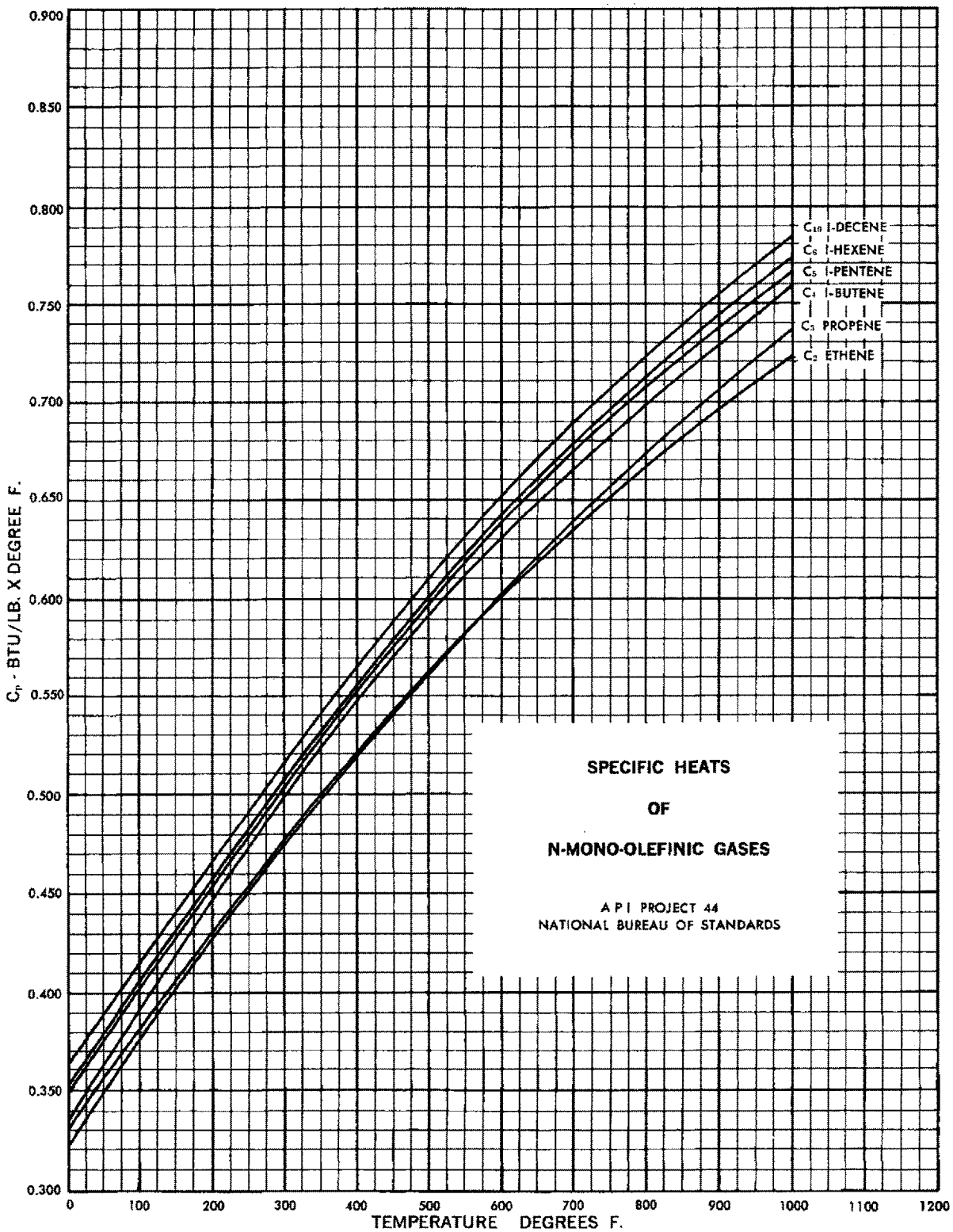

 ©Tubular Exchanger Manufacturers Association, Inc.

FIGURE P-2.3C

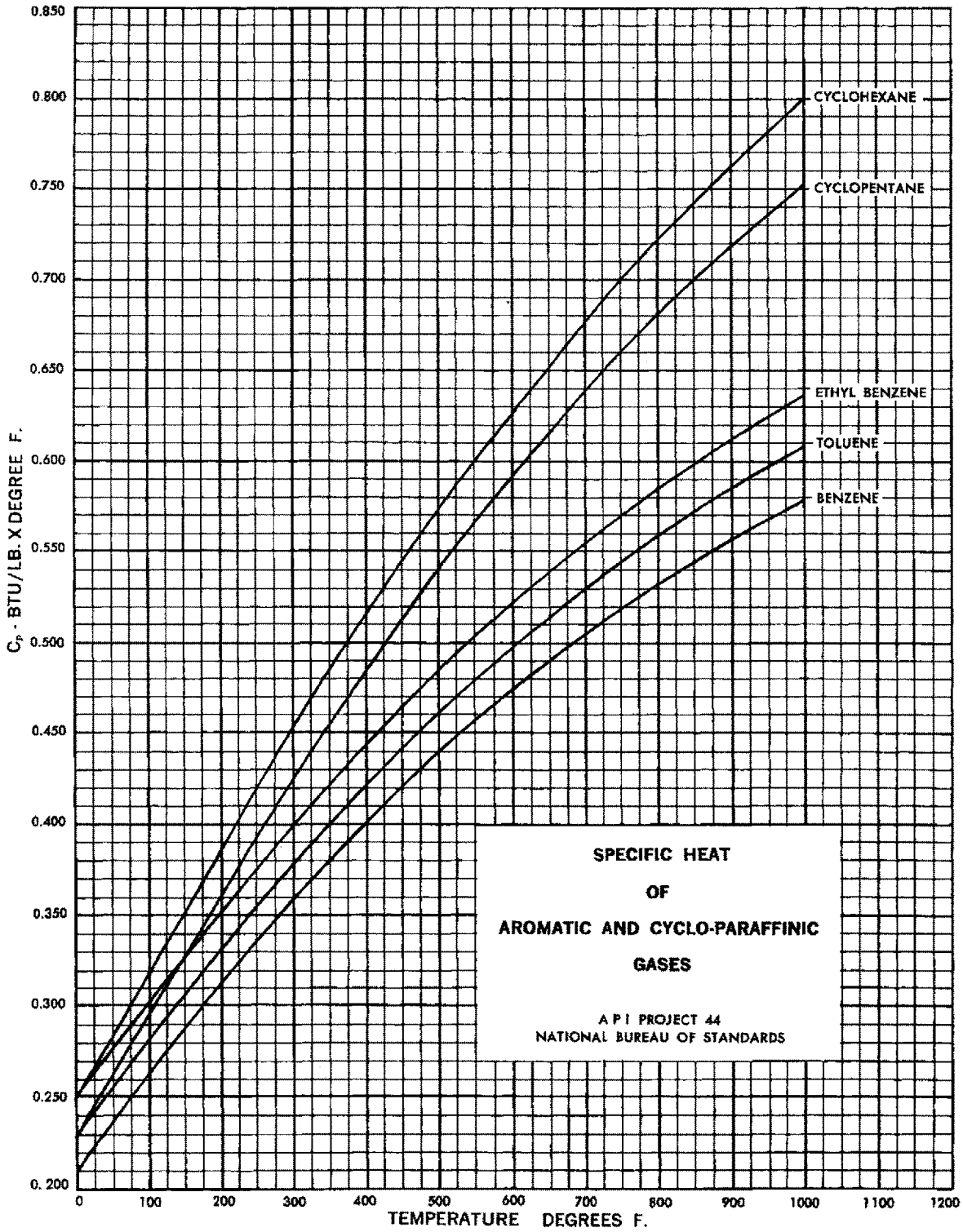

©Tubular Exchanger Manufacturers Association, Inc.

FIGURE P-2.4A

SPECIFIC HEATS OF LIQUIDS

NO.	LIQUID	RANGE DEG C
29	ACETIC ACID 100%	0 - 80
32	ACETONE	20 - 50
52	AMMONIA	- 70 - 50
37	AMYL ALCOHOL	- 50 - 25
26	AMYL ACETATE	0 - 100
30	ANILINE	0 - 130
23	BENZENE	10 - 80
27	BENZYL ALCOHOL	- 20 - 30
10	BENZYL CHLORIDE	- 30 - 30
49	BRINE, 25% $CaCl_2$	- 40 - 20
51	BRINE, 25% NaCl	- 40 - 20
44	BUTYL ALCOHOL	0 - 100
2	CARBON DISULPHIDE	- 100 - 25
3	CARBON TETRACHLORIDE	10 - 60
8	CHLOROBENZENE	0 - 100
4	CHLOROFORM	0 - 50
21	DECANE	- 80 - 25
6A	DICHLOROETHANE	- 30 - 60
5	DICHLOROMETHANE	- 40 - 50
15	DIPHENYL	80 - 120
22	DIPHENYLMETHANE	30 - 100
16	DIPHENYL OXIDE	0 - 200
16	DOWTHERM A	0 - 200
24	ETHYL ACETATE	- 50 - 25
42	ETHYL ALCOHOL 100%	30 - 80
46	ETHYL ALCOHOL 95%	20 - 80
50	ETHYL ALCOHOL 50%	20 - 80
25	ETHYL BENZENE	0 - 100
1	ETHYL BROMIDE	5 - 25
13	ETHYL CHLORIDE	- 30 - 40
36	ETHYL ETHER	- 100 - 25
7	ETHYL IODIDE	0 - 100
39	ETHYLENE GLYCOL	- 40 - 200

NO.	LIQUID	RANGE DEG C
2A	FREON-11 (CCl_3F)	-20 - 70
6	FREON-12 (CCl_2F_2)	-40 - 15
4A	FREON-21 ($CHCl_2F$)	-20 - 70
7A	FREON-22 ($CHClF_2$)	-20 - 60
3A	FREON-113 ($CCl_2F-CClF_2$)	-20 - 70
38	GLYCEROL	-40 - 20
28	HEPTANE	0 - 60
35	HEXANE	-80 - 20
48	HYDROCHLORIC ACID, 30%	20 - 100
41	ISOAMYL ALCOHOL	10 - 100
43	ISOBUTYL ALCOHOL	0 - 100
47	ISOPROPYL ALCOHOL	-20 - 50
31	ISOPROPYL ETHER	-80 - 20
40	METHYL ALCOHOL	-40 - 20
13A	METHYL CHLORIDE	-80 - 20
14	NAPHTHALENE	90 - 200
12	NITROBENZENE	0 - 100
34	NONANE	-50 - 25
33	OCTANE	-50 - 25
3	PERCHLORETHYLENE	-30 - 140
45	PROPYL ALCOHOL	-20 - 100
20	PYRIDINE	-50 - 25
9	SULPHURIC ACID 98%	10 - 45
11	SULPHUR DIOXIDE	-20 - 100
23	TOLUENE	0 - 60
53	WATER	10 - 200
19	XYLENE ORTHO	0 - 100
18	XYLENE META	0 - 100
17	XYLENE PARA	0 - 100

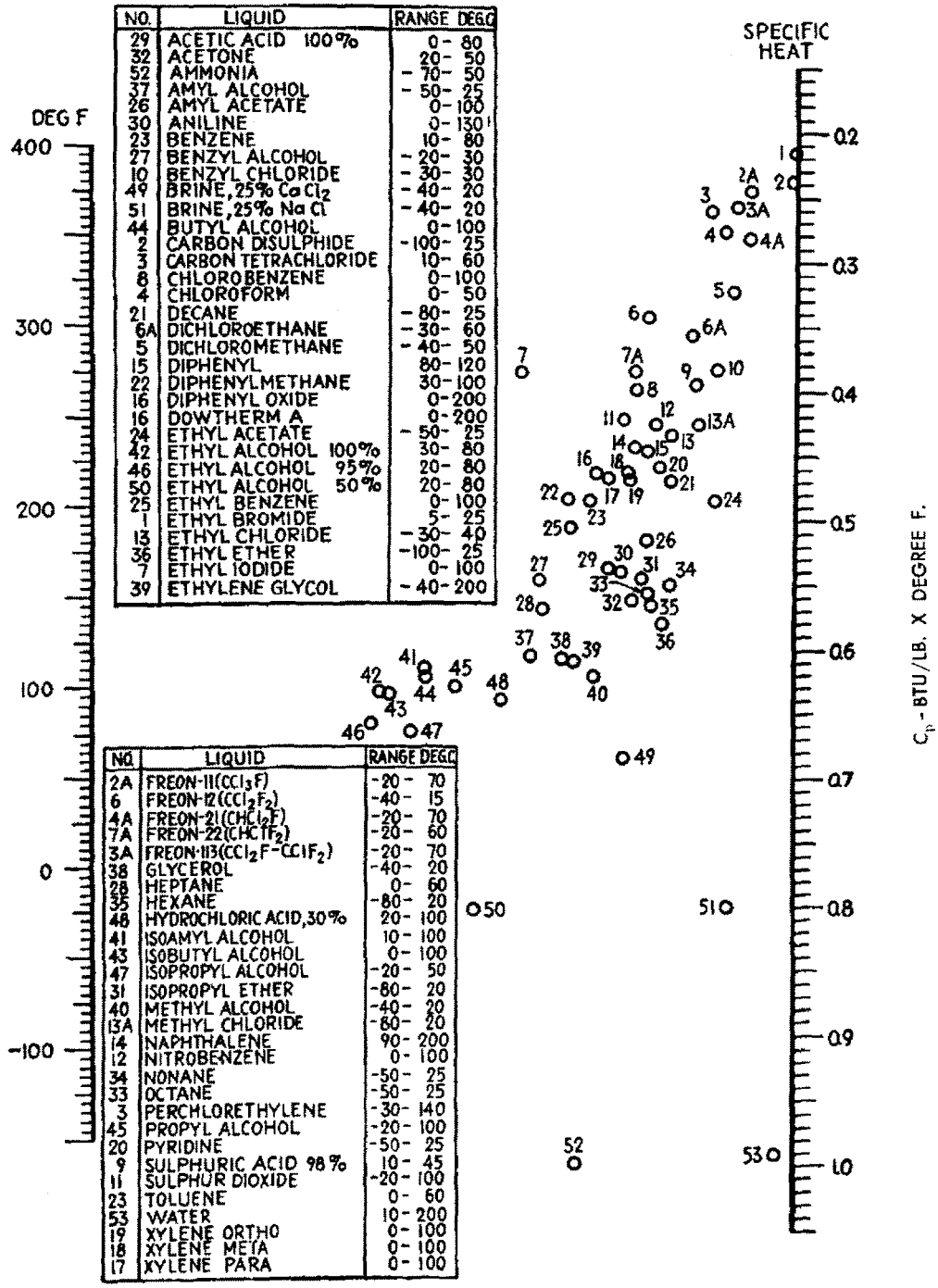

By permission from Heat Transmission, by W. H. McAdams. Copyrighted 1954. McGraw-Hill Book Company, Inc.

FIGURE P-2.4B

SPECIFIC HEATS-GASES 1 ATM.

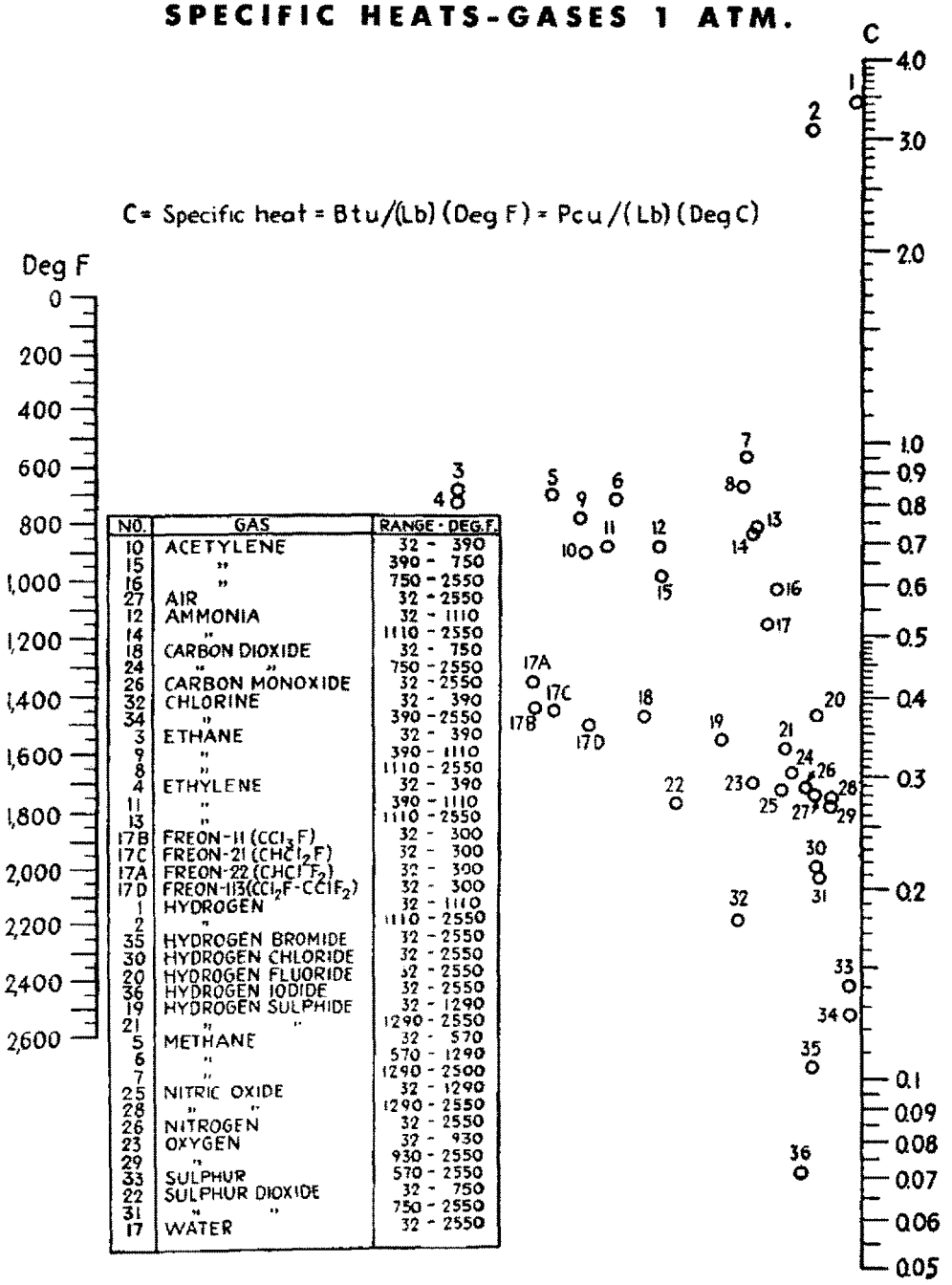

NO.	GAS	RANGE - DEG. F.
10	ACETYLENE	32 - 390
15	"	390 - 750
16	"	750 - 2550
27	AIR	32 - 2550
12	AMMONIA	32 - 1110
14	"	1110 - 2550
18	CARBON DIOXIDE	32 - 750
24	" "	750 - 2550
26	CARBON MONOXIDE	32 - 2550
32	CHLORINE	32 - 390
34	"	390 - 2550
3	ETHANE	32 - 390
9	"	390 - 1110
8	"	1110 - 2550
4	ETHYLENE	32 - 390
11	"	390 - 1110
13	"	1110 - 2550
17B	FREON-11 (CCl_3F)	32 - 300
17C	FREON-21 ($CHCl_2F$)	32 - 300
17A	FREON-22 ($CHClF_2$)	32 - 300
17D	FREON-113 ($CCl_2F-CClF_2$)	32 - 300
1	HYDROGEN	32 - 1110
2	"	1110 - 2550
35	HYDROGEN BROMIDE	32 - 2550
30	HYDROGEN CHLORIDE	32 - 2550
20	HYDROGEN FLUORIDE	32 - 2550
36	HYDROGEN IODIDE	32 - 2550
19	HYDROGEN SULPHIDE	32 - 1290
21	" "	1290 - 2550
5	METHANE	32 - 570
6	"	570 - 1290
7	"	1290 - 2500
25	NITRIC OXIDE	32 - 1290
28	" "	1290 - 2550
26	NITROGEN	32 - 2550
23	OXYGEN	32 - 930
29	"	930 - 2550
33	SULPHUR	570 - 2550
22	SULPHUR DIOXIDE	32 - 750
31	" "	750 - 2550
17	WATER	32 - 2550

By permission from Heat Transmission, by W. H. McAdams. Copyrighted 1954. McGraw-Hill Book Company, Inc.

FIGURE P-2.5

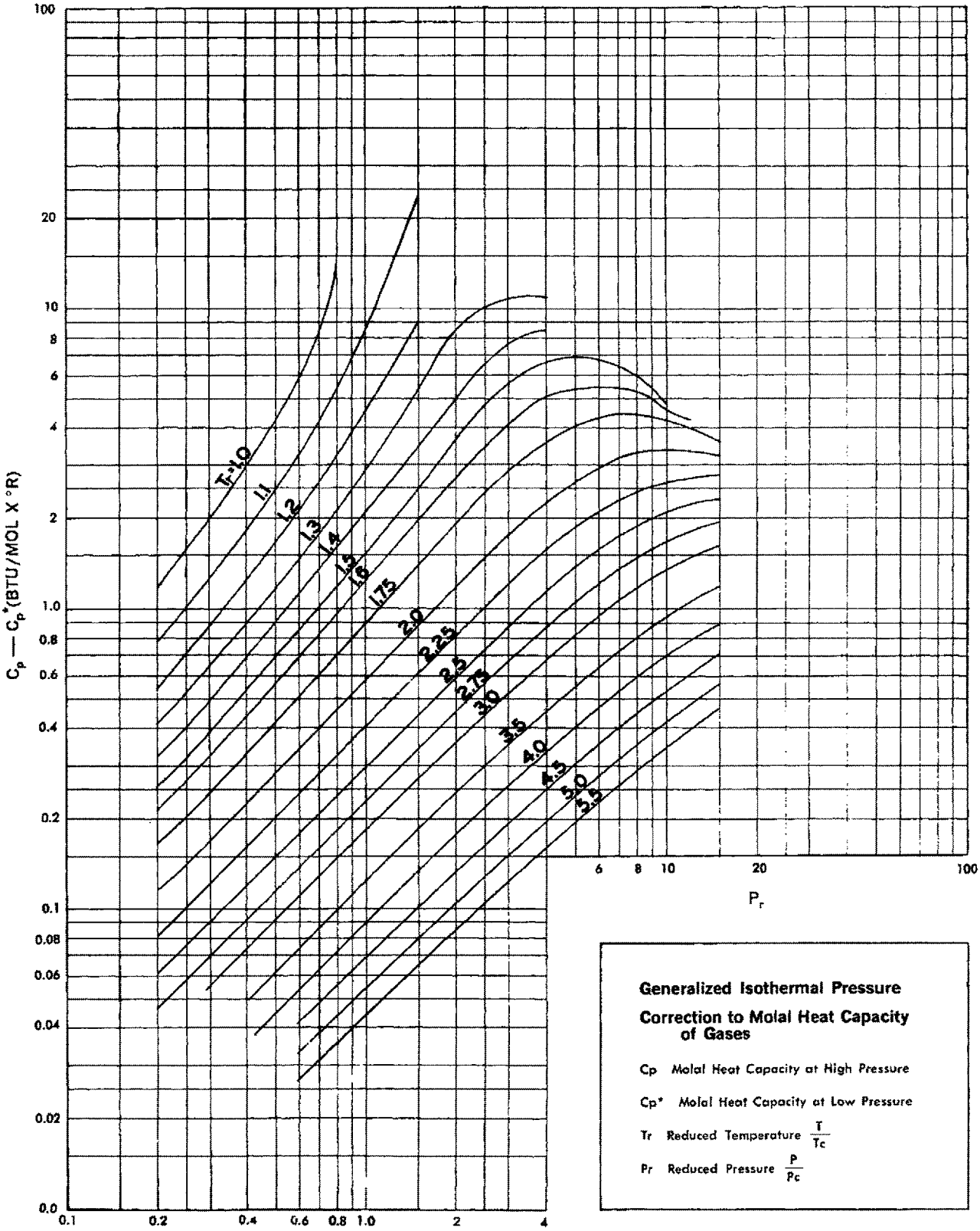

Reprinted by permission from Industrial and Engineering Chemistry, vol. 49, p. 121, 1957. A. H. Weiss and J. Joffe.

 ©Tubular Exchanger Manufacturers Association, Inc.

FIGURE P-3.1

HEAT CONTENT OF PETROLEUM FRACTIONS INCLUDING THE EFFECT OF PRESSURE

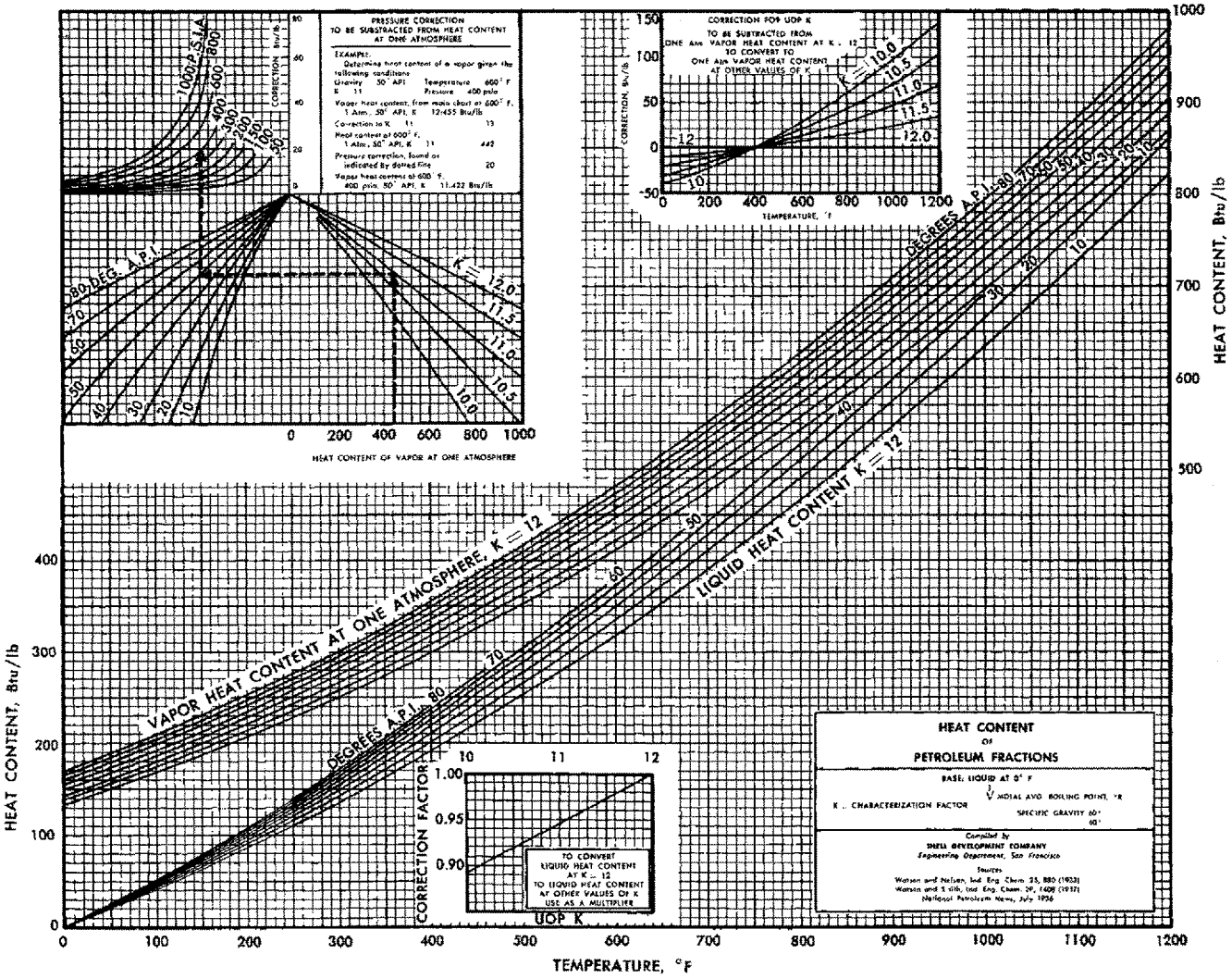

Reprinted by permission of Shell Development Company. Copyright 1945.

FIGURE P-3.2

LATENT HEATS OF VAPORIZATION OF VARIOUS LIQUIDS

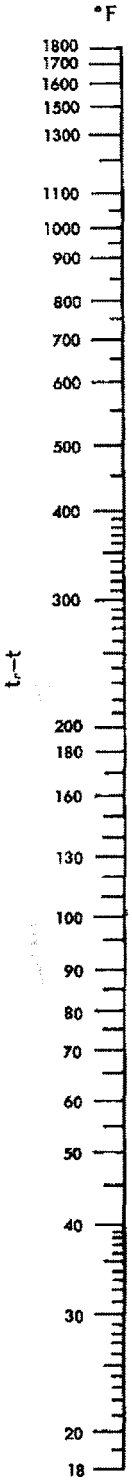

LIQUID	t_c °F	Range t_c-t °F	X	Y
Acetic Acid	609	212-392	5.6	11.9
Acetone	455	284-464	4.0	10.3
Ammonia	272	176-392	3.2	3.8
Amyl alcohol (-iso)	585	392-572	6.0	9.4
Benzene	552	50-572	3.6	12.5
Butane (-n)	307	104-158	2.6	11.6
Butane		158-392	3.6	11.7
Butane (-iso)	273	167-345	3.4	12.1
Butyl alcohol (-n)	548	337-572	2.0	9.8
Butyl alcohol (-iso)	508	302-392	1.7	9.7
Butyl alcohol		392-517	6.9	7.7
Butyl alcohol (-sec)	508	337-517	5.6	8.8
Butyl alcohol (-tert)	455	302-392	3.9	9.5
Carbon dioxide	91	50-212	3.3	11.1
Carbon disulfide	522	284-527	3.5	13.7
Carbon tetrachloride	542	50-572	3.6	17.3
Chlorine	291	212-392	1.5	14.5
Chloroform	506	345-508	3.7	15.7
Dichloroethylene (-cie)	468	392-572	9.4	13.3
Dimethyl amine	329	256-392	4.8	8.8
Diphenyl	982	50- 90	2.2	15.2
Diphenyl		90-302	3.8	15.2
Diphenyl		302-752	0.8	12.8
Diphenyl oxide	952	176-643	3.1	15.5
Diphenyl oxide		643-932	6.2	14.5
Ethane	895	50-266	4.0	9.8
Ethyl alcohol	470	50-284	3.1	7.0
Ethyl alcohol		285-482	4.7	6.3
Ethyl amine	362	266-446	3.9	9.0
Ethyl chloride	369	302-446	4.1	12.2
Ethylene	50	50-122	3.0	9.3
Ethylene		122-256	4.0	0.6
Ethyl ether	382	59-266	3.1	12.7
Ethyl ether		266-464	1.8	12.7
Freon-11 (CCl_3F)	388	158-482	3.6	17.3
Freon-12 (CCl_2F_2)	232	140-302	3.9	17.2
Freon-21 ($CHCl_2F$)	325	176-427	3.3	15.4
Freon-22 ($CHClF_2$)	205	122-320	4.0	15.1
Freon-113 (CCl_2FCClF_2)	417	194-482	3.5	18.7
Freon-114 ($CClF_2CClF_2$)	293	113-392	3.5	18.7
Heptane (-n)	512	50-517	3.4	13.5
Hexane (-n)	456	131-464	3.4	13.2
Methane	116	50-194	5.2	8.3
Methyl alcohol	464	68-285	3.3	5.3
Methyl alcohol		283-464	3.6	4.7
Methyl amine	315	212-392	4.1	6.5
Methyl chloride	289	61-230	2.6	11.1
Methyl chloride		230-247	5.2	11.2
Methyl formate	417	302-482	1.9	11.3
Methylene chloride	421	302-482	1.0	13.7
Nitrous oxide	97	43- 77	1.2	9.2
Nitrous oxide		77-256	5.6	12.3
Octane (-n)	565	61-572	3.6	13.8
Pentane (-n)	386	59-482	3.3	12.7
Pentane (-iso)	370	50-392	3.2	12.7
Propane	205	59-482	4.3	11.0
Propyl alcohol (-n)	507	77-517	2.1	8.8
Propyl alcohol (-iso)	456	302-482	3.5	8.3
Pyridine	652	446-661	2.3	12.5
Sulfur dioxide	314	212-392	2.0	12.3
Toluene	611	212-572	1.5	13.7
Trichloroethylene	520	355-582	6.0	15.9
Water	707	50-675	3.0	1.0

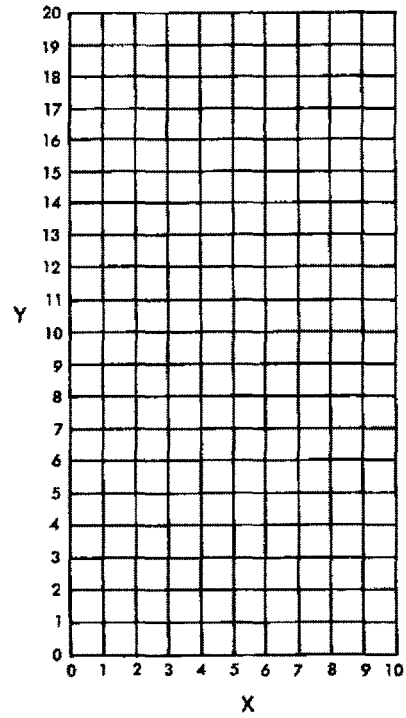

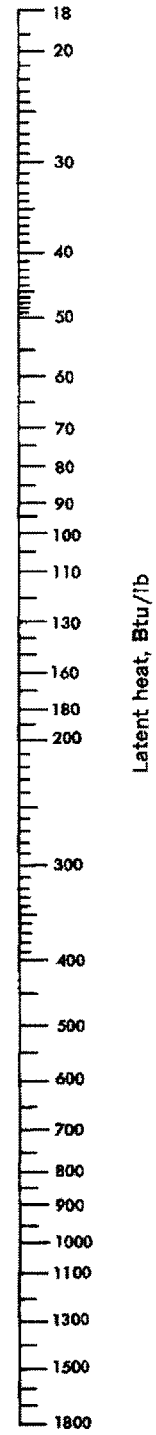

Example:—For water at 212°F, $t_c-t = 707-212 = 495$ and the latent heat per lb is 970 Btu

(Latent heat accurate within ± 10 per cent)

From "Process Heat Transfer," 1st Ed., Donald Q. Kern; McGraw-Hill Book Company, reprinted by permission.

©Tubular Exchanger Manufacturers Association, Inc.

TABLE P-3.3

HEAT CAPACITY RATIOS (C_P / C_V)

Acetylene	1.26
Air	1.403
Ammonia	1.310
Argon	1.688
Benzene	1.10 (200°F)
Carbon Dioxide	1.304
Chlorine	1.355
Dichlorodiflouromethane	1.139 (77°F)
Ethane	1.22
Ethyl Alcohol	1.13 (200°F)
Ethyl Ether	1.08 (95°F)
Ehylene	1.255
Helium	1.660 (-292°F)
Hexane (n-)	1.08 (176°F)
Hydrogen	1.410
Methane	1.31
Methyl Alcohol	1.203 (171°F)
Nitrogen	1.404
Oxygen	1.401
Pentane(n-)	1.086 (189°F)
Sulfur Dioxide	1.29

(All values at 60°F and one atmosphere unless otherwise noted)

 ©Tubular Exchanger Manufacturers Association, Inc.

FIGURE P-4.2

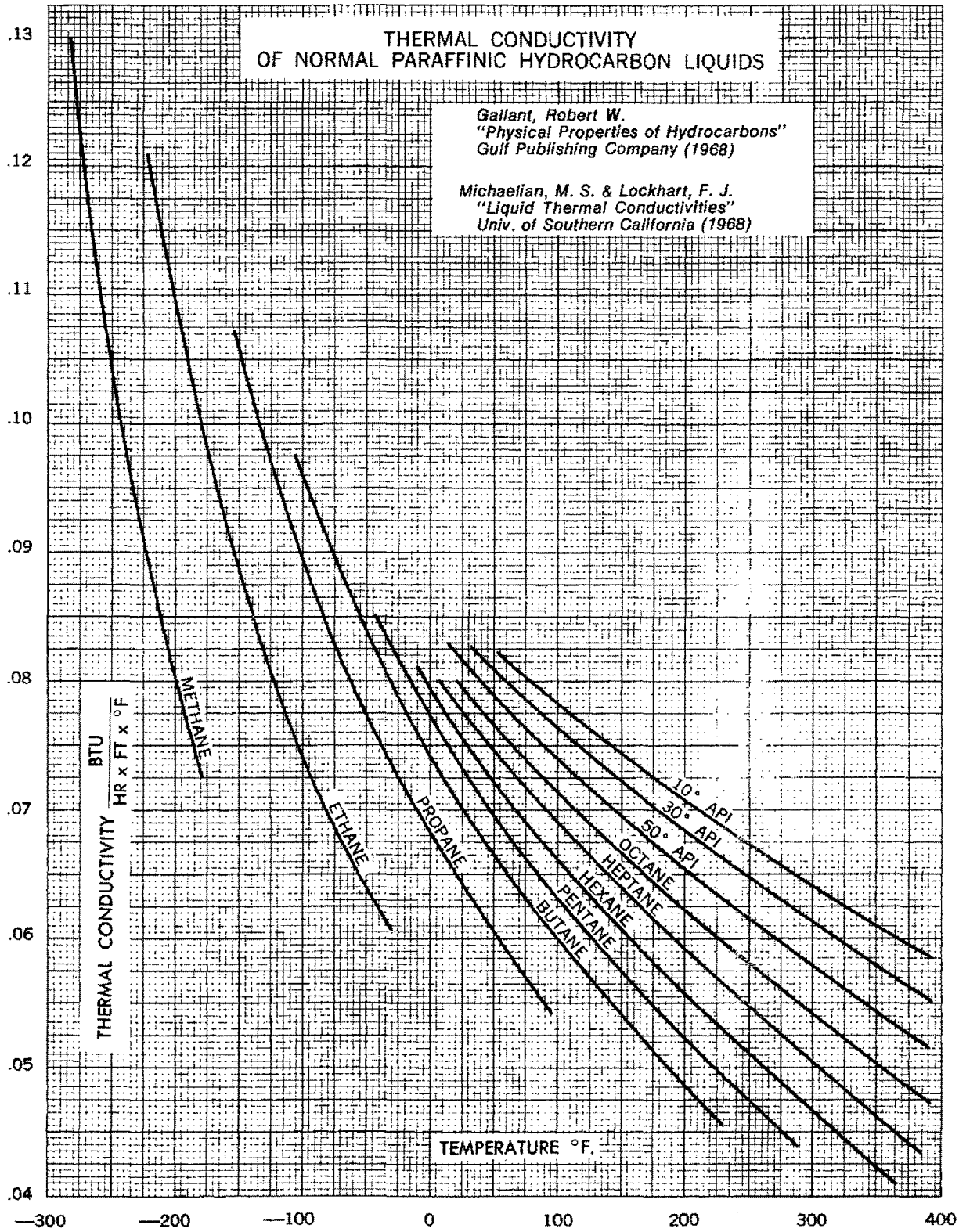

 ©Tubular Exchanger Manufacturers Association, Inc.

FIGURE P-4.3A

THERMAL CONDUCTIVITY OF LIQUIDS

k = B.t.u./(hr.)(sq. ft.)(°F./ft.)

A linear variation with temperature may be assumed. The extreme values given constitute also the temperature limits over which the data are recommended.

Liquid	T, °F.	k
Acetic Acid	68	.092
	300	.078
Acetone	0	.093
	170	.076
Acetylene	−220	.137
	−110	.089
	32	.057
Acrylic Acid	32	.144
	100	.124
	320	.086
Allyl Alcohol	68	.095
	212	.092
Amyl Alcohol	68	.089
	212	.085
Aniline	68	.133
	300	.089
Benzene	68	.085
	320	.059
Bromobenzene	32	.065
	390	.059
Butyl Acetate (N)	32	.082
	320	.056
Butyl Alcohol (ISO)	−40	.100
	50	.087
	160	.077
	300	.075
Butyl Alcohol (N)	−40	.104
	300	.064
Carbon Disulfide	−112	.084
	68	.072
Carbon Tetrachloride	−112	.071
	212	.052
Chlorobenzene	32	.075
	390	.068
Chloroform	−100	.083
	212	.056
Cumene	32	.075
	390	.050
Cyclohexane	40	.089
	100	.081
	250	.060
Dichlorodifluoromethane	−80	.066
	50	.063
	140	.058
Ethyl Acetate	32	.088
	230	.065
Ethyl Alcohol	−40	.110
	300	.080
Ethyl Benzene	32	.080
	390	.045
Formaldehyde	−110	.185
	0	.132
	68	.116
Glycerine	68	.161
	390	.181
Heptane (N)	50	.074
	300	.050
Hexane (N)	50	.072
	300	.046
Heptyl Alcohol	68	.077
	280	.071
Hexyl Alcohol	68	.077
	250	.074
Methylethyl-Ketone (MEK)	0	.089
	250	.067
Methyl Alcohol (Methanol)	−22	.132
	300	.096
Nonane (N)	50	.077
	300	.056
Octane	50	.076
	300	.054
Para Xylene	68	.076
	176	.065
	390	.047
Pentane	50	.069
	250	.048
Propyl Alcohol (N)	−40	.106
	300	.072
Propyl Alcohol (ISO)	−40	.092
	140	.075
	300	.072
Toluene	32	.083
	390	.050
Trichloroethylene	−40	.084
	86	.065
	300	.046
Vinyl Acetate	32	.088
	230	.065
Water	32	.343
	100	.363
	200	.383
	300	.395
	420	.376
	620	.275
Xylene (Ortho)	32	.087
	176	.068
	390	.048
Xylene (Meta)	32	.080
	176	.062
	390	.044

Extracted from "Physical Properties of Hydrocarbons"
By R. W. Gallant, Copyright 1968, Gulf Publishing Co.

©Tubular Exchanger Manufacturers Association, Inc.

FIGURE P-4.3B

THERMAL CONDUCTIVITIES OF GASES AND VAPORS

[k = BTU/(hr)(sq ft)(deg. F per ft)]

	TEMPERATURE °F.							
Substance	—328	—148	32	122	212	392	572	752
Acetone			.0057	.0076	.0099	.0157		
Acetylene		.0056	.0108	.0140	.0172			
Air	.0040	.0091	.0140		.0184	.0224	.0260	
Ammonia		.0097*	.0126		.0192	.0280	.0385	.0509
Argon		.0063	.0095		.0123	.0148	.0171	
Benzene			.0052	.0075	.0103	.0166		
Butane (n-)			.0078		.0135			
Butane (iso-)			.0080		.0139			
Carbon dioxide		.0064*	.0084		.0128	.0177	.0229	
Carbon disulfide			.0040					
Carbon monoxide	.0037	.0088	.0134		.0176			
Carbon tetrachloride				.0042	.0052	.0068		
Chlorine			.0043					
Chloroform			.0038	.0047	.0058	.0081		
Cyclohexane					.0094			
Dichlorodifluoromethane			.0048	.0064	.0080	.0115		
Ethane		.0055	.0106		.0175			
Ethyl acetate				.0074	.0096	.0150		
Ethyl alcohol			.0081		.0124			
Ethyl chloride			.0055		.0095	.0145		
Ethyl ether			.0077	.0101	.0131	.0200		
Ethylene		.0051	.0101	.0131	.0161			
Helium	.0338	.0612	.0818		.0988			
Heptane (n-)					.0103	.0112		
Hexane (n-)			.0072	.0080†				
Hexene			.0061		.0109			
Hydrogen	.0293	.0652	.0966		.1240	.1484	.1705	
Hydrogen sulfide			.0076					
Mercury						.0197		
Methane	.0045	.0109	.0176		.0255	.0358	.0490	
Methyl acetate			.0059	.0068†				
Methyl alcohol			.0083		.0128			
Methyl chloride			.0053	.0074	.0094	.0140		
Methylene chloride			.0039	.0050	.0063	.0091		
Neon			.0026					
Nitric oxide		.0089	.0138	.0161				
Nitrogen	.0040	.0091	.0139		.0181	.0220	.0255	.0287
Nitrous oxide		.0047	.0088		.0138			
Oxygen	.0038	.0091	.0142	.0166	.0188			
Pentane (n-)			.0074	.0083†				
Pentane (iso-)			.0072		.0127			
Propane			.0087		.0151			
Sulfur dioxide			.0050		.0069			
Water vapor, zero pressure					.0136	.0182	.0230	.0279

* Value at — 58° F.

† Value at 68° F.

Adapted from Heat Transmission, by W. H. McAdams. Copyrighted 1954. McGraw-Hill Book Company, Incorporated.

 ©Tubular Exchanger Manufacturers Association, Inc.

FIGURE P-4.4A

THERMAL CONDUCTIVITY—GASES
PRESSURE CORRECTION—GENERALIZED CORRELATION

REF.: LENOIR, JUNK & COMINGS, CHEM. ENG. PROG. 49, 539-542 (1935)

Note: To find thermal conductivity at any desired temperature and pressure, multiply thermal conductivity at atmospheric pressure (14.7 PSIA) and desired temperature by thermal conductivity ratio $\left(\frac{k}{k^\circ}\right)$ at reduced pressure P_r and reduced temperature T_r :

$$k = \left(\frac{k}{k^\circ}\right)_{P_r,T_r} \times k^\circ$$

Where: k = Thermal conductivity at pressure (PSIA) and desired temperature T
k° = Thermal Conductivity at 14.7 PSIA and desired temperature T
$\left(\frac{k}{k^\circ}\right)_{P_r,T_r}$ = Thermal conductivity ratio at reduced pressure P_r and reduced temperature T_r, dimensionless
T = Desired temperature, °R (= 460 + °F)
T_c = Critical temperature, °R
$T_r = \frac{T}{T_c}$, Dimensionless
P = Pressure, PSIA
P_c = Critical pressure, PSIA
$P_r = \frac{P}{P_c}$, Dimensionless

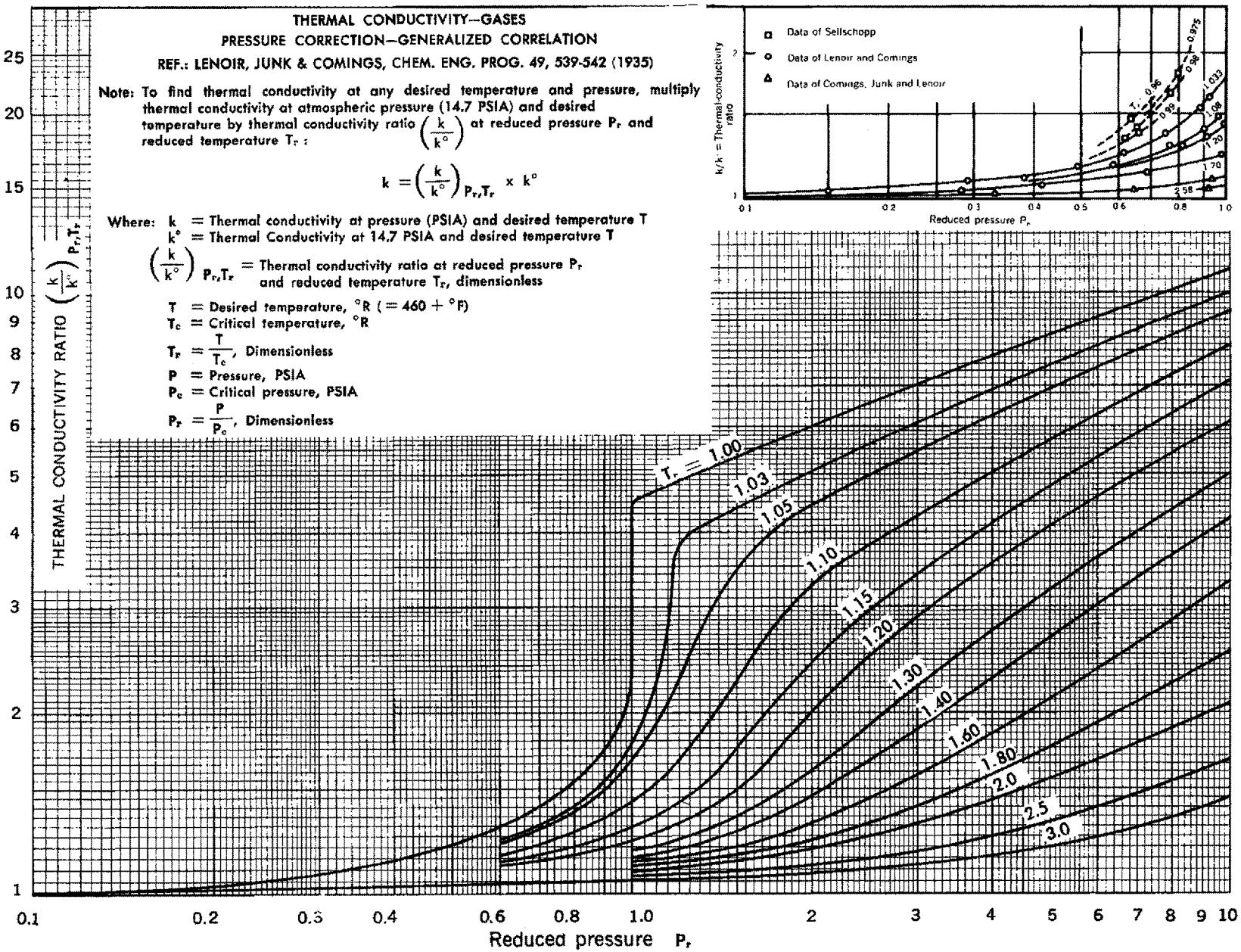

©Tubular Exchanger Manufacturers Association, Inc.

FIGURE P-4.4B

THERMAL CONDUCTIVITY—LIQUIDS
PRESSURE CORRECTION—GENERALIZED CORRELATION

REF.: LENOIR, J. M., PET. REF. 36, 162-164 (1957)

Note: To find thermal conducticity k_2 at pressure P_2 and temperature T, multiply known value k_1 by ratio $\left(\frac{e_2}{e_1}\right)$

$$k_2 = k_1 \left(\frac{e_2}{e_1}\right)$$

Where:
- k_1 = Known thermal conductivity at any pressure P_1 and temperature T
- k_2 = Desired thermal conductivity at P_2 and T
- e_1 = Thermal conductivity factor at $(P_r)_1$ and T_r
- e_2 = Thermal conductivity factor at $(P_r)_2$ and T_r
- P_1 and P_2 = Pressures, PSIA
- P_c = Critical Pressure, PSIA
- $(P_r)_1$ = P_1/P_c, Dimensionless
- $(P_r)_2$ = P_2/P_c, Dimensionless
- T = Temperature, °R (= 460 + °F)
- T_c = Critical temperature, °R
- T_r = T/T_c, dimensionless

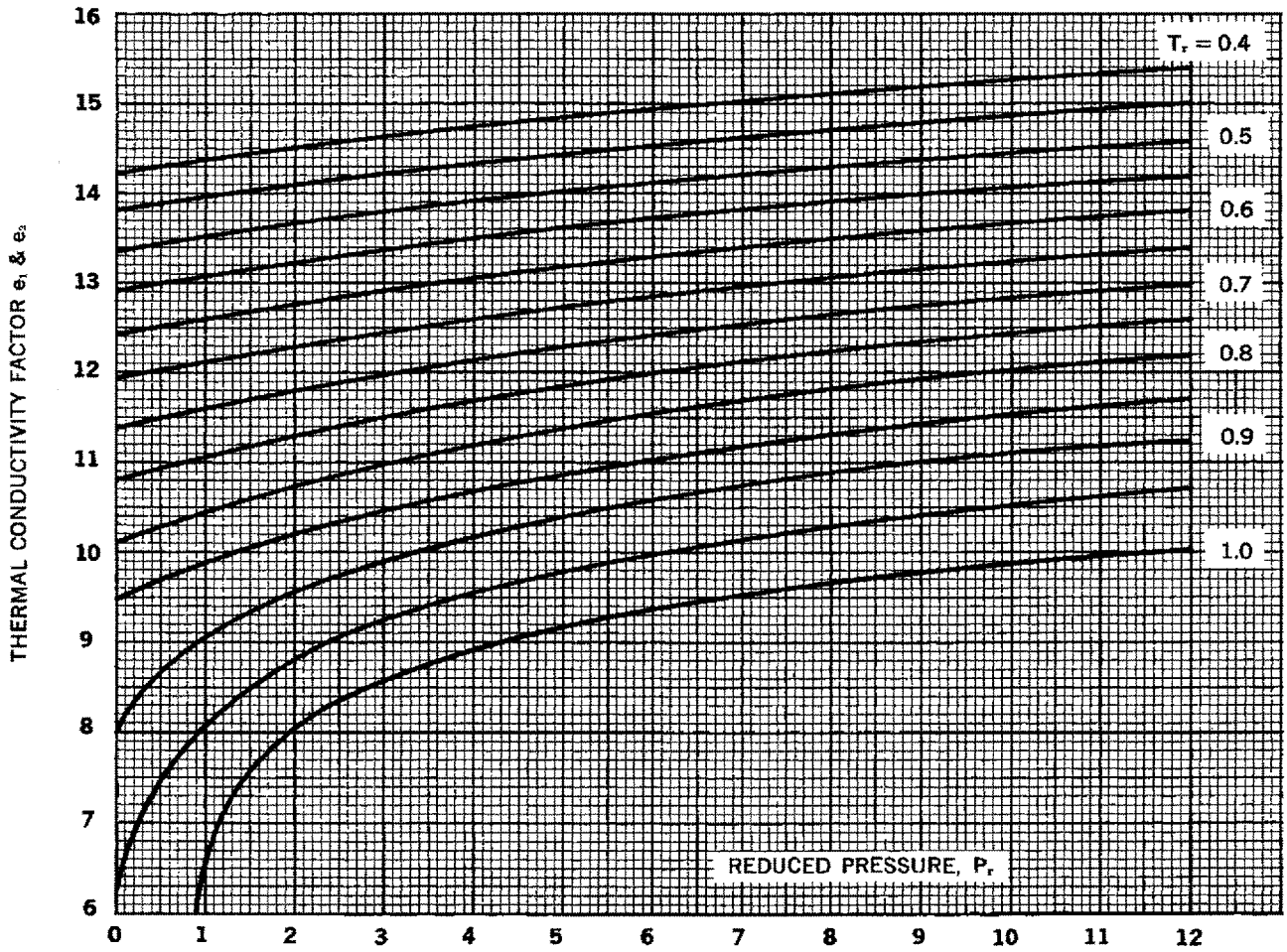

 ©Tubular Exchanger Manufacturers Association, Inc.

FIGURE P-5.1

VISCOSITY CONVERSION PLOT

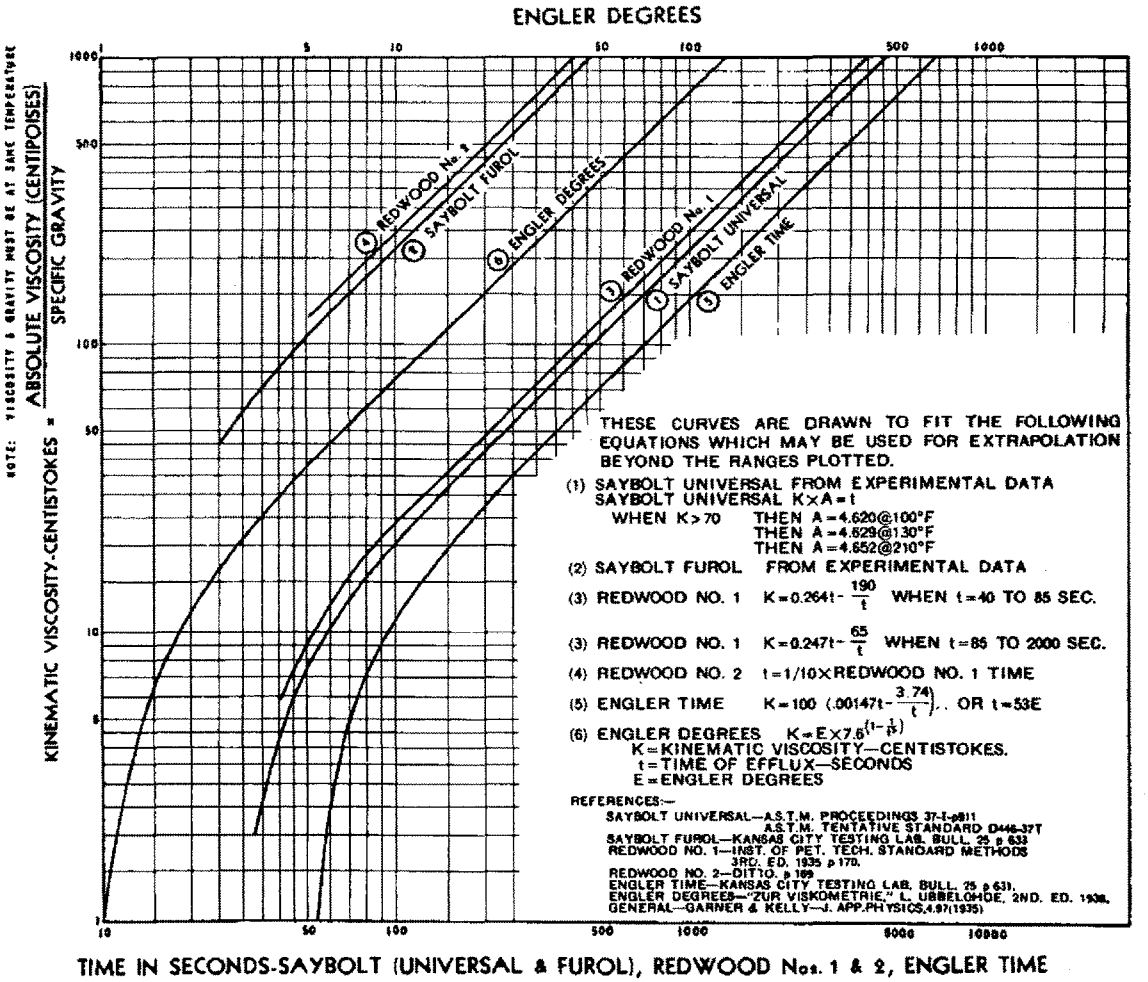

©Tubular Exchanger Manufacturers Association, Inc.

FIGURE P-5.2A

VISCOSITY — TEMPERATURE RELATIONSHIP FOR PETROLEUM OILS

LINES OF CONSTANT DEGREES A.P.I. CHARACTERIZATION FACTOR, K = 10.0

Ref: Watson, Wien & Murphy, Industrial & Engineering Chemistry 28,605-9 (1936)

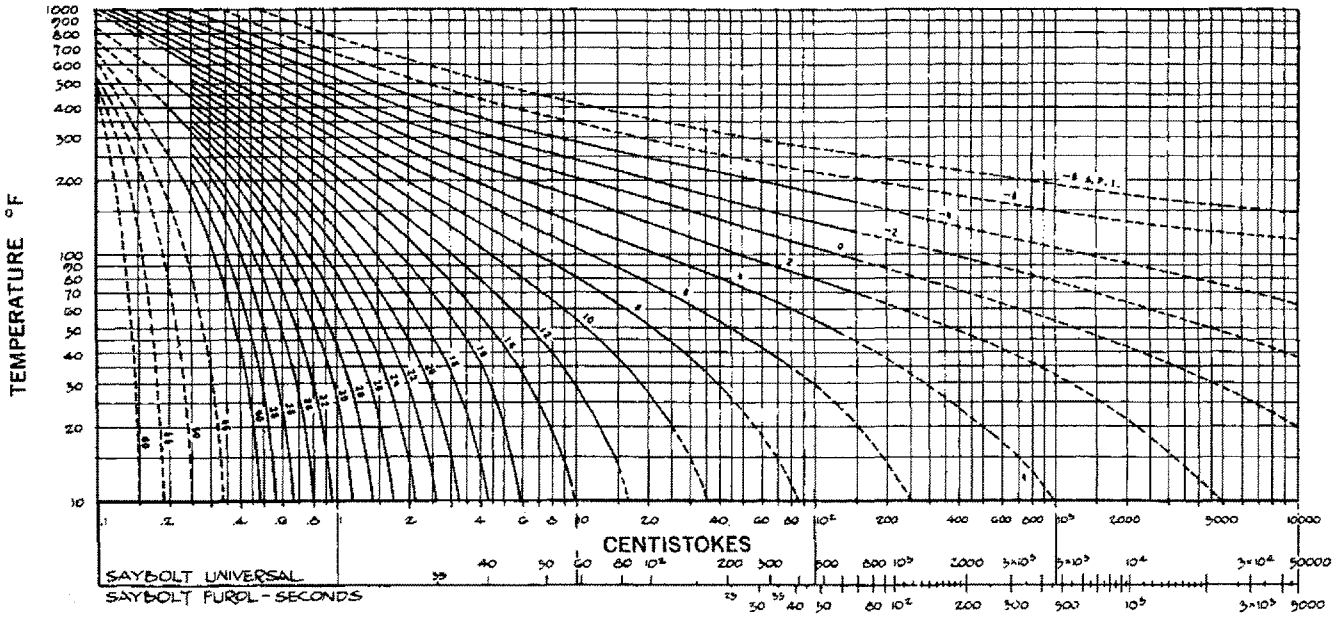

FIGURE P-5.2B

VISCOSITY — TEMPERATURE RELATIONSHIP FOR PETROLEUM OILS

LINES OF CONSTANT DEGREES A.P.I. CHARACTERIZATION FACTOR, K = 11.0

Ref: Watson, Wien & Murphy, Industrial & Engineering Chemistry 28,605-9 (1936)

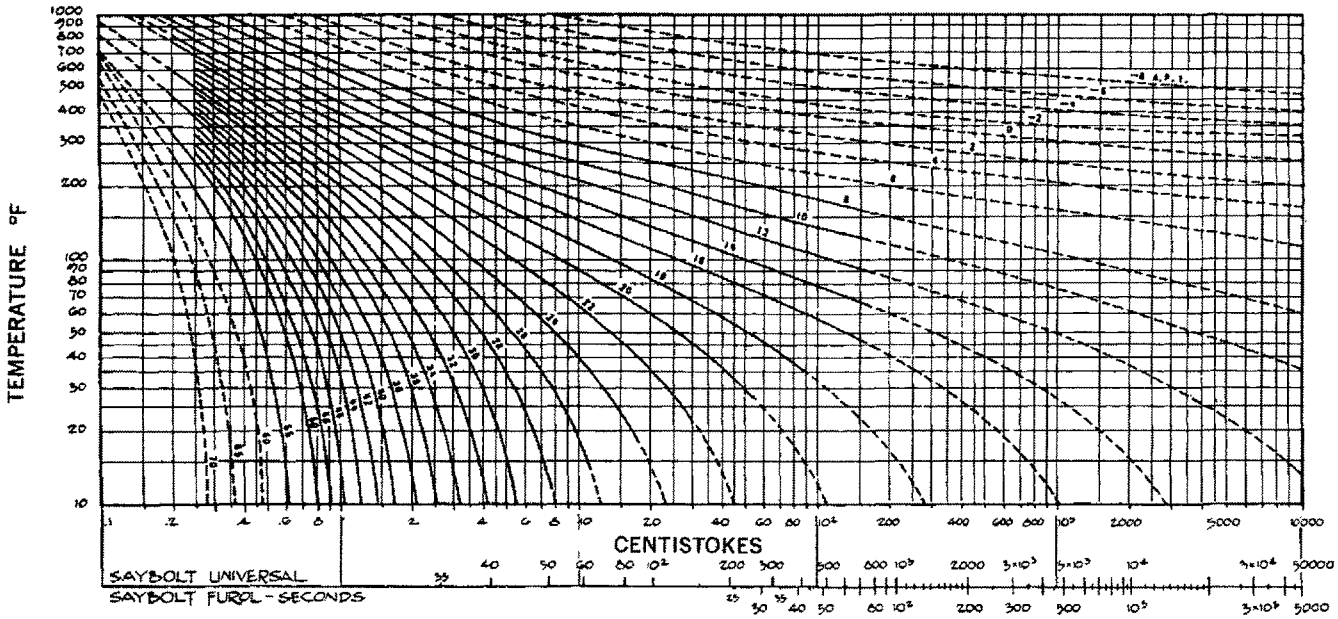

©Tubular Exchanger Manufacturers Association, Inc.

FIGURE P-5. 2C

VISCOSITY — TEMPERATURE RELATIONSHIP FOR PETROLEUM OILS

LINES OF CONSTANT DEGREES A.P.I. CHARACTERIZATION FACTOR, K = 11.8

Ref: Watson, Wien & Murphy, Industrial & Engineering Chemistry 28,605-9 (1936)

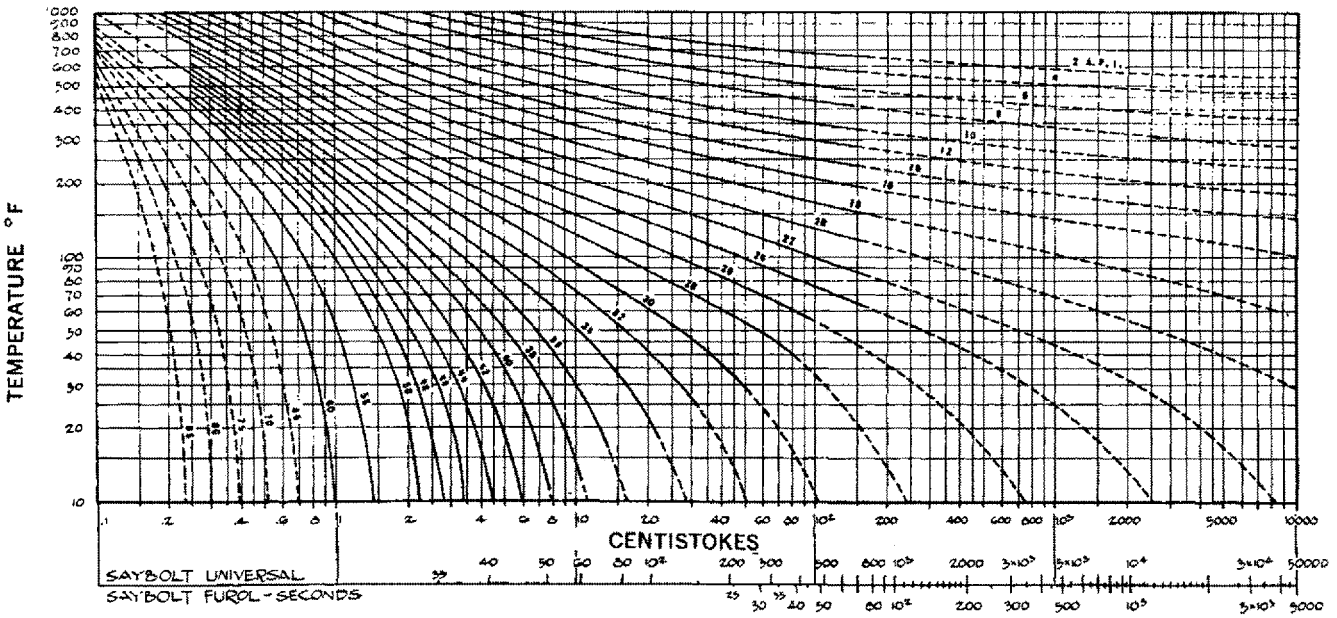

FIGURE P-5.2D

VISCOSITY — TEMPERATURE RELATIONSHIP FOR PETROLEUM OILS

LINES OF CONSTANT DEGREES A.P.I. CHARACTERIZATION FACTOR, K = 12.5

Ref: Watson, Wien & Murphy, Industrial & Engineering Chemistry 28,605-9 (1936)

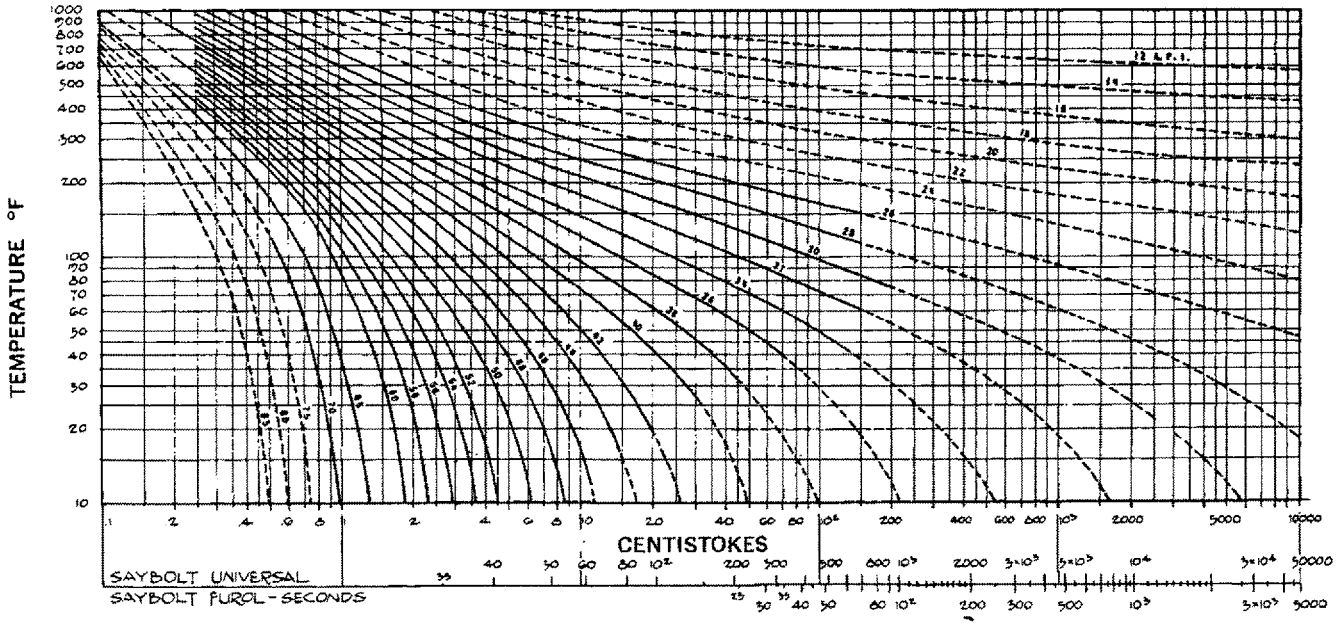

©Tubular Exchanger Manufacturers Association, Inc.

FIGURE P-5.3A

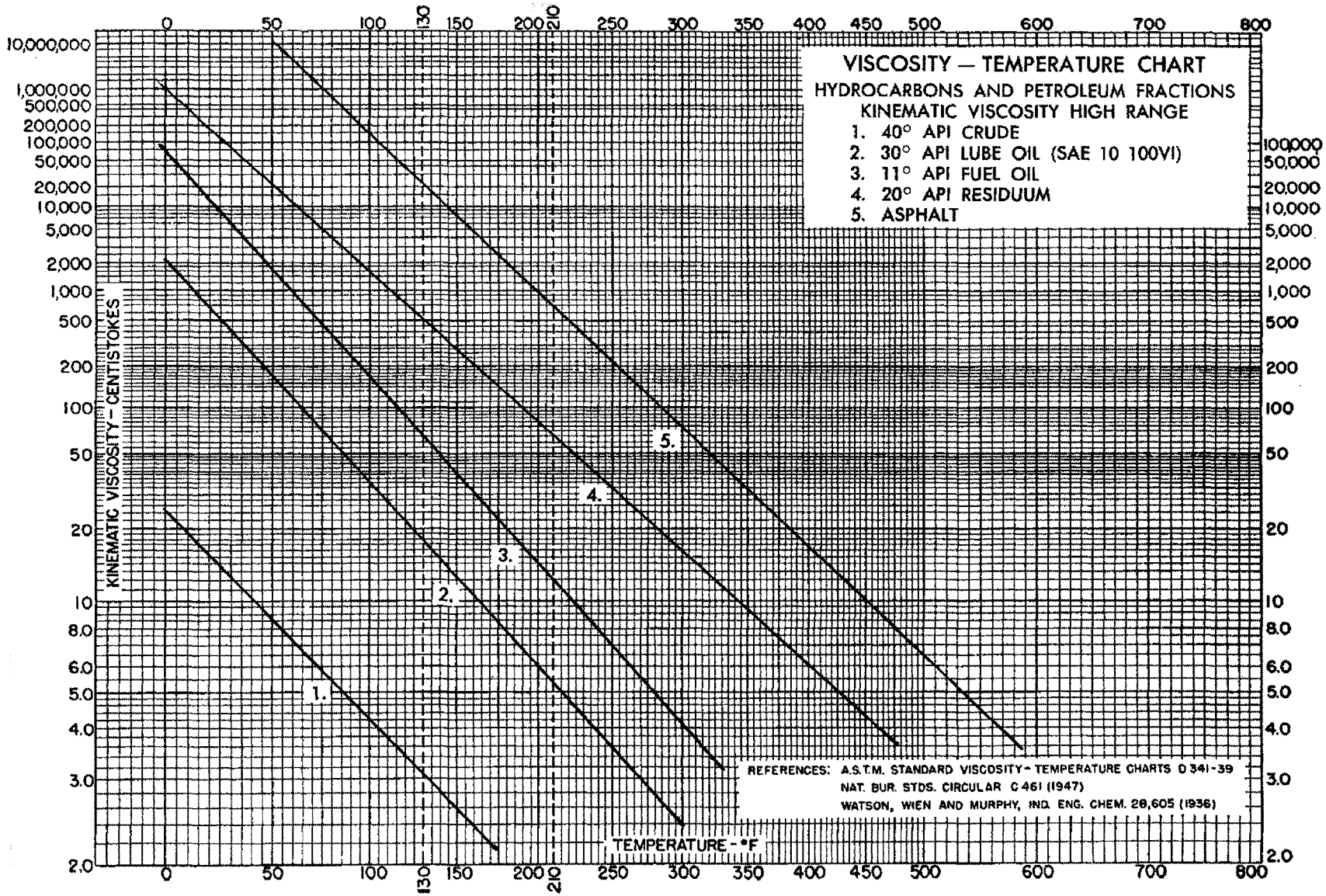

Reprinted by permission of the copyright owner, Esso Research and Engineering Co., Linden, N. J., from "Data Book on Hydrocarbons," by J. B. Maxwell, D. Van Nostrand Company, New York, 1950.

©Tubular Exchanger Manufacturers Association, Inc.

FIGURE P-5.3B

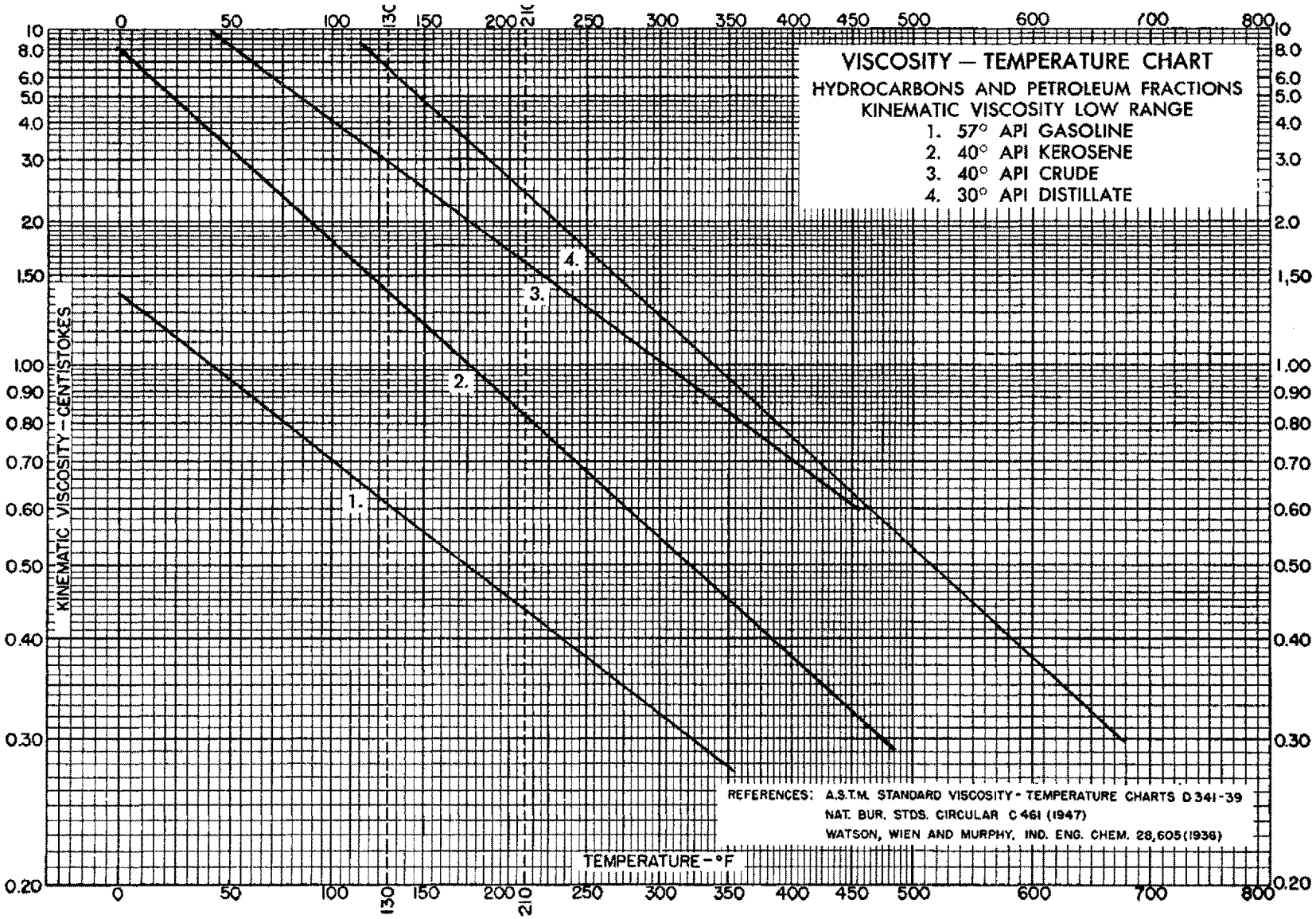

Reprinted by permission of the copyright owner, Esso Research and Engineering Co., Linden, N. J., from "Data Book on Hydrocarbons," by J. B. Maxwell, D. Van Nostrand Company, New York, 1950.

©Tubular Exchanger Manufacturers Association, Inc.

VISCOSITIES OF LIQUIDS AT 1 ATM.

FIGURE P-5.4A

No.	Liquid	X	Y	No.	Liquid	X	Y
1	Acetaldehyde	15.2	4.8	56	Freon-22	17.2	4.7
2	Acetic acid, 100%	12.1	14.2	57	Freon-113	12.5	11.4
3	Acetic acid, 70%	9.5	17.0	58	Glycerol, 100%	2.0	30.0
4	Acetic anhydride	12.7	12.8	59	Glycerol, 50%	6.9	19.6
5	Acetone, 100%	14.5	7.2	60	Heptene	14.1	8.4
6	Acetone, 35%	7.9	15.0	61	Hexane	14.7	7.0
7	Allyl alcohol	10.2	14.3	62	Hydrochloric acid, 31.5%	13.0	16.6
8	Ammonia, 100%	12.6	2.0	63	Isobutyl alcohol	7.1	18.0
9	Ammonia, 26%	10.1	13.9	64	Isobutyric acid	12.2	14.4
10	Amyl acetate	11.8	12.5	65	Isopropyl alcohol	8.2	16.0
11	Amyl alcohol	7.5	18.4	66	Kerosene	10.2	16.9
12	Aniline	8.1	18.7	67	Linseed oil, raw	7.5	27.2
13	Anisole	12.3	13.5	68	Mercury	18.4	16.4
14	Arsenic trichloride	13.9	14.5	69	Methanol, 100%	12.4	10.5
15	Benzene	12.5	10.9	70	Methanol, 90%	12.3	11.8
16	Brine, $CaCl_2$, 25%	6.6	15.9	71	Methanol, 40%	7.8	15.5
17	Brine, NaCl, 25%	10.2	16.6	72	Methyl acetate	14.2	8.2
18	Bromine	14.2	13.2	73	Methyl chloride	15.0	3.8
19	Bromotoluene	20.0	15.9	74	Methyl ethyl ketone	13.9	8.6
20	Butyl acetate	12.3	11.0	75	Naphthalene	7.9	18.1
21	Butyl alcohol	8.6	17.2	76	Nitric acid, 95%	12.8	13.8
22	Butyric acid	12.1	15.3	77	Nitric acid, 60%	10.8	17.0
23	Carbon dioxide	11.6	0.3	78	Nitrobenzene	10.6	16.2
24	Carbon disulphide	16.1	7.5	79	Nitrotoluene	11.0	17.0
25	Carbon tetrachloride	12.7	13.1	80	Octane	13.7	10.0
26	Chlorobenzene	12.3	12.4	81	Octyl alcohol	6.6	21.1
27	Chloroform	14.4	10.2	82	Pentachloroethane	10.9	17.3
28	Chlorosulfonic acid	11.2	18.1	83	Pentane	14.9	5.2
29	Chlorotoluene, ortho	13.0	13.3	84	Phenol	6.9	20.8
30	Chlorotoluene, meta	13.3	12.5	85	Phosphorus tribromide	13.8	16.7
31	Chlorotoluene para	13.3	12.5	86	Phosphorus trichloride	16.2	10.9
32	Cresol, meta	2.5	20.8	87	Propionic acid	12.8	13.8
33	Cyclohexanol	2.9	24.3	88	Propyl alcohol	9.1	16.5
34	Dibromoethane	12.7	15.8	89	Propyl bromide	14.5	9.6
35	Dichloroethane	13.2	12.2	90	Propyl chloride	14.4	7.5
36	Dichloromethane	14.6	8.9	91	Propyl iodide	14.1	11.6
37	Diethyl oxalate	11.0	16.4	92	Sodium	16.4	13.9
38	Dimethyl oxalate	12.3	15.8	93	Sodium hydroxide, 50%	3.2	25.8
39	Diphenyl	12.0	18.3	94	Stannic chloride	13.5	12.8
40	Dipropyl oxalate	10.3	17.7	95	Sulphur dioxide	15.2	7.1
41	Ethyl acetate	13.7	9.1	96	Sulphuric acid, 110%	7.2	27.4
42	Ethyl alcohol, 100%	10.5	13.8	97	Sulphuric acid, 98%	7.0	24.8
43	Ethyl alcohol, 95%	9.8	14.3	98	Sulphuric acid, 60%	10.2	21.3
44	Ethyl alcohol, 40%	6.5	16.6	99	Sulphuryl chloride	15.2	12.4
45	Ethyl benzene	13.2	11.5	100	Tetrachloroethane	11.9	15.7
46	Ethyl bromide	14.5	8.1	101	Tetrachloroethylene	14.2	12.7
47	Ethyl chloride	14.8	6.0	102	Titanium tetrachloride	14.4	12.3
48	Ethyl ether	14.5	5.3	103	Toluene	13.7	10.4
49	Ethyl formate	14.2	8.4	104	Trichloroethylene	14.8	10.5
50	Ethyl iodide	14.7	10.3	105	Turpentine	11.5	14.0
51	Ethylene glycol	6.0	23.6	106	Vinyl acetate	14.0	8.8
52	Formic acid	10.7	15.8	107	Water	10.2	13.0
53	Freon-11	14.4	9.0	108	Xylene, ortho	13.5	12.1
54	Freon-12	16.8	5.6	109	Xylene, meta	13.9	10.6
55	Freon-21	15.7	7.5	110	Xylene, para	13.9	10.9

By permission from CHEMICAL ENGINEERS' HANDBOOK, by J. H. Perry.
Copyrighted 1950. McGraw-Hill Book Company, Inc.

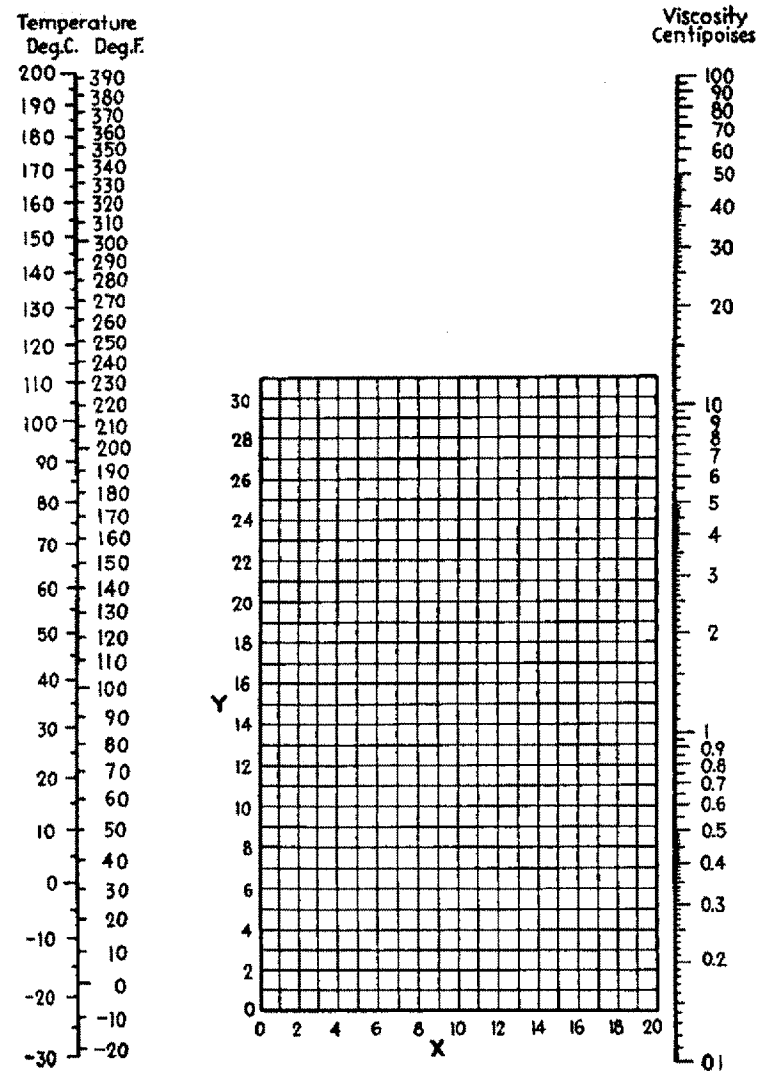

By permission from HEAT TRANSMISSION, by W. H. McAdams.
Copyrighted 1954. McGraw-Hill Book Company, Inc.

VISCOSITIES OF GASES AND VAPORS AT 1 ATM.

FIGURE P-5.4B

No.	Gas	X	Y	No.	Gas	X	Y
1	Acetic acid	7.7	14.3	29	Freon-113	11.3	14.0
2	Acetone	8.9	13.0	30	Helium	10.9	20.5
3	Acetylene	9.8	14.9	31	Hexane	8.6	11.8
4	Air	11.0	20.0	32	Hydrogen	11.2	12.4
5	Ammonia	8.4	16.0	33	$3H_2 + 1N_2$	11.2	17.2
6	Argon	10.5	22.4	34	Hydrogen bromide	8.8	20.9
7	Benzene	8.5	13.2	35	Hydrogen chloride	8.8	18.7
8	Bromine	8.9	19.2	36	Hydrogen cyanide	9.8	14.9
9	Butene	9.2	13.7	37	Hydrogen iodide	9.0	21.3
10	Butylene	8.9	13.0	38	Hydrogen sulphide	8.6	18.0
11	Carbon dioxide	9.5	18.7	39	Iodine	9.0	18.4
12	Carbon disulphide	8.0	16.0	40	Mercury	5.3	22.9
13	Carbon monoxide	11.0	20.0	41	Methane	9.9	15.5
14	Chlorine	9.0	18.4	42	Methyl alcohol	8.5	15.6
15	Chloroform	8.9	15.7	43	Nitric oxide	10.9	20.5
16	Cyanogen	9.2	15.2	44	Nitrogen	10.6	20.0
17	Cyclohexane	9.2	12.0	45	Nitrosyl chloride	8.0	17.6
18	Ethane	9.1	14.5	46	Nitrous oxide	8.8	19.0
19	Ethyl acetate	8.5	13.2	47	Oxygen	11.0	21.3
20	Ethyl alcohol	9.2	14.2	48	Pentane	7.0	12.8
21	Ethyl chloride	8.5	15.6	49	Propane	9.7	12.9
22	Ethyl ether	8.9	13.0	50	Propyl alcohol	8.4	13.4
23	Ethylene	9.5	15.1	51	Propylene	9.0	13.8
24	Fluorine	7.3	23.8	52	Sulphur dioxide	9.6	17.0
25	Freon-11	10.6	15.1	53	Toluene	8.6	12.4
26	Freon-12	11.1	16.0	54	2, 3, 3-trimethylbutane	9.5	10.5
27	Freon-21	10.8	15.3	55	Water	8.0	16.0
28	Freon-22	10.1	17.0	56	Xenon	9.3	23.0

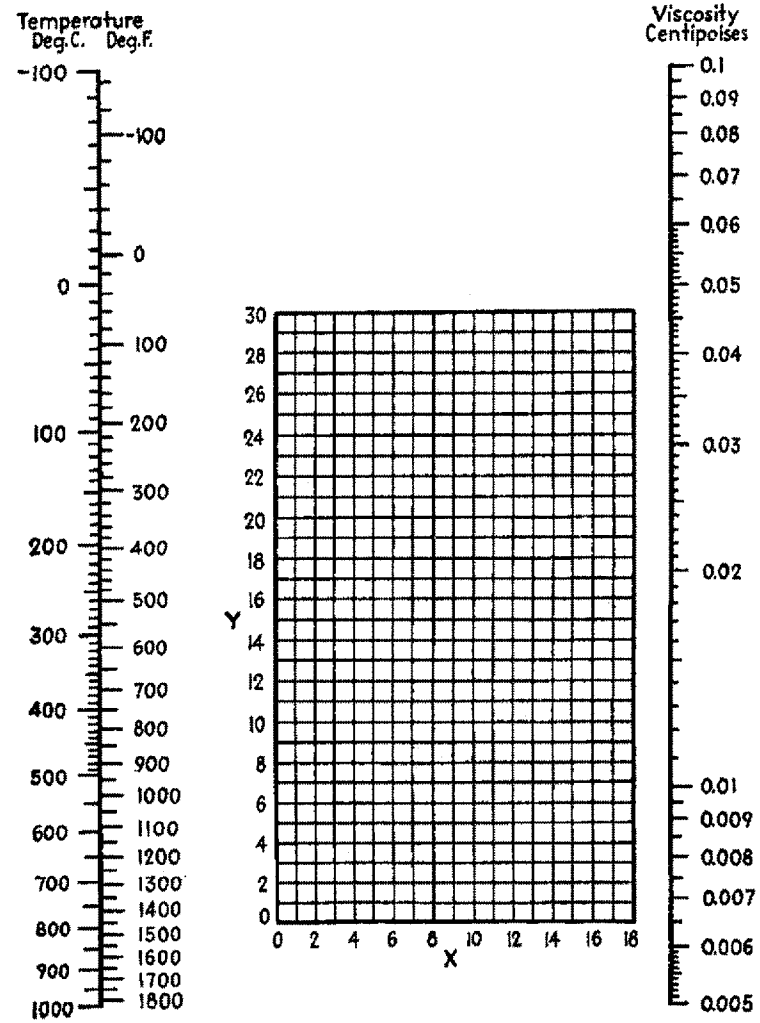

By permission from CHEMICAL ENGINEERS' HANDBOOK, by J. H. Perry.
Copyrighted 1950. McGraw-Hill Book Company, Inc.

By permission from HEAT TRANSMISSION, by W. H. McAdams.
Copyrighted 1954. McGraw-Hill Book Company, Inc.

©Tubular Exchanger Manufacturers Association, Inc.

FIGURE P-5.5

HIGH PRESSURE GAS VISCOSITY

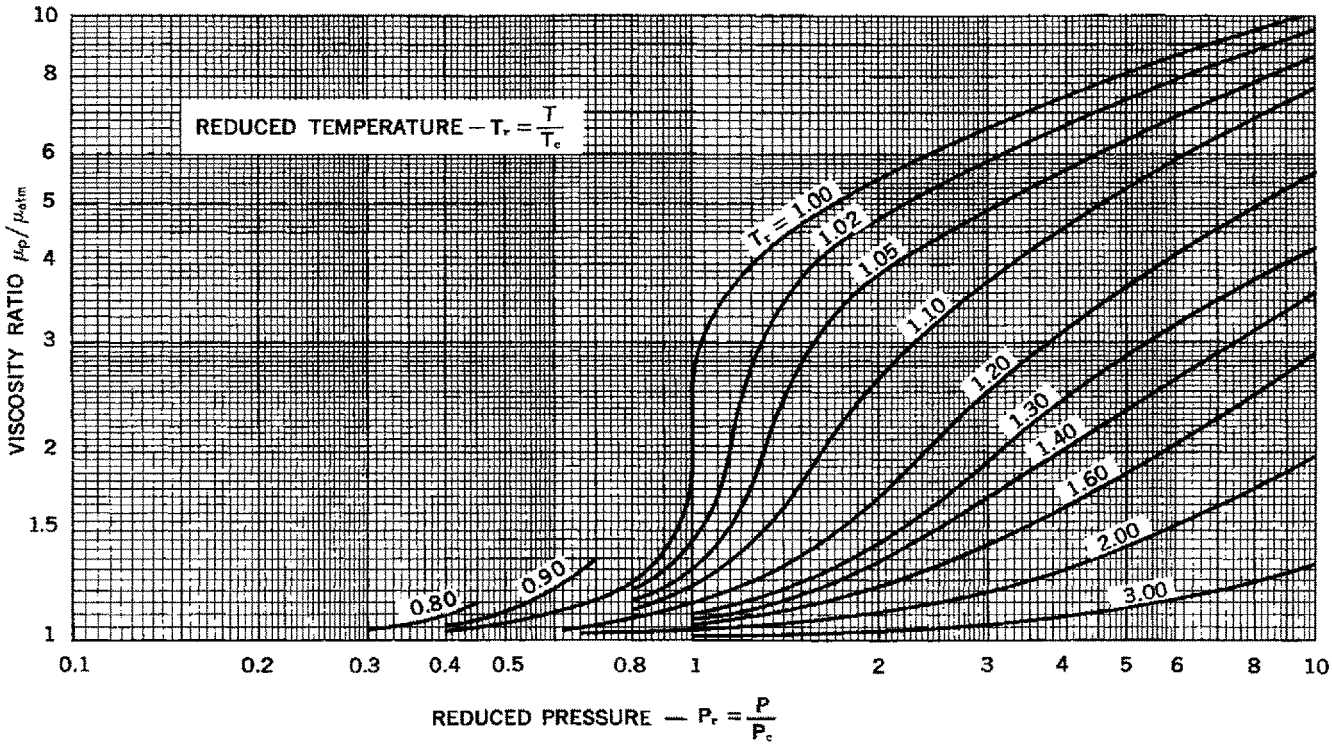

Reprinted by permission from Chemical Engineering Progress Symposium Series, 51, No. 16, 1955. N. L. Carr, J. D. Parent, and R. E. Peck.

TABLE P-6.1

CRITICAL PROPERTY DATA

Substance	Molecular Weight	Critical Temp.—°R	Critical Pressure PSIA	Substance	Molecular Weight	Critical Temp.—°R	Critical Pressure PSIA
Acetic Acid	60.05	1071	840	n-Heptane	100.2	972	397
Acetone	58.1	918	694	Heptyl Alcohol	116.2	1091	436
Acetylene	26.04	557	890	n-Hexane	86.2	914	440
Acrylic Acid	72.03	1176	734	Hexyl Alcohol	102.2	1055	490
Allyl Alcohol	58.08	982	831	Hydrogen	2.016	60	188
Ammonia	17.03	730	1639	Hydrogen Chloride	36.46	584	1199
Aniline	93.06	1259	769	Hydrogen Fluoride	20.01	830	941
Argon	40	272	706	Hydrogen Iodide	128	763	1191
Benzene	78.1	1013	714	Hydrogen Sulfide	34.08	672	1307
Bromobenzene	157.02	1207	655	Isobutane	58.1	735	529
1, 3 Butadiene	54.1	765	628	Isobutene	56.1	752	580
n-Butane	58.1	765	551	Isopentane	72.1	830	483
Butylene	56.1	755	583	Krypton	83.8	376	797
Butyl Acetate	116.16	1043	442	Methane	16.04	343	673
n-Butyl Alcohol	74.1	1014	640	Methyl Alcohol	32	926	1174
i-Butyl Alcohol	74.1	965	608	Methylethyl-Ketone	72.1	964	603
Carbon Dioxide	44.0	547	1070	Neon	20.18	80	395
Carbon Disulfide	76.14	983	1105	Nitrogen	28.02	227	492
Carbon Monoxide	28.01	239	510	Nitrogen Oxide	30.01	325	950
Carbon Tetrachloride	153.8	1001	660	n-Nonane	128.3	1071	332
Chlorine	70.9	751	1119	n-Octane	114.2	1025	362
Chlorobenzene	112.56	1138	655	Oxygen	32	278	737
Chloroform	119.4	960	805	n-Pentane	72.1	846	490
Cumene	120.19	1136	467	Phenol	94.1	1250	890
Cyclohexane	84.2	998	588	Propane	44.1	666	617
n-Decane	142.3	1112	304	Propylene	42.1	657	667
Dichlorodifluoromethane	120.9	694	597	n-Propyl Alcohol	60.1	966	750
Ethane	30.07	550	708	i-Propyl Alcohol	60.1	915	691
Ethylene	28.05	510	730	Sulfolane	120.2	1442	767
Ethyl Alcohol	46.1	930	925	Sulfur Dioxide	64.1	775	1142
Ethyl Acetate	88.1	942	557	Toluene	92.1	1069	590
Ethyl Benzene	106.16	1111	536	Trichloroethylene	131.4	774	809
Fluorine	38	260	808	Vinyl Acetate	86.1	946	609
Formaldehyde	30.02	739	984	Vinyl Chloride	62.5	1028	710
Helium	4.003	10	33.2	Water	18.02	1165	3206

©Tubular Exchanger Manufacturers Association, Inc.

This page intentionally blank

©Tubular Exchanger Manufacturers Association, Inc.

CONTENTS

TABLE	TITLE	PAGE
D-1	Dimensions of Welded and Seamless Pipe	9-2
D-2	Dimensions of Welded Fittings	9-3
D-3	Dimensions of Flanges	9-5
D-4	International Material Specifications	9-24
D-5	Bolting Data – Recommended Minimum	9-39
D-5M	Metric Bolting Data – Recommended Minimum	9-40
D-7	Characteristics of Tubing	9-41
D-7M	Characteristics of Tubing (Metric)	9-42
D-8	Hardness Conversion Table	9-43
D-9A	Internal Working Pressures of Tubes at Various Values of Allowable Stress	9-44
D-9B	External Working Pressures (PSI) of Various Tube Materials	9-47
D-10	Moduli of Elasticity	9-50
D-11	Mean Coefficients of Thermal Expansion	9-53
D-12	Thermal Conductivity of Metals	9-59
D-13	Weights of Circular Rings and Discs	9-66
D-14	Chord Lengths and Areas of Circular Segments	9-70
D-15	Conversion Factors	9-71
D-16	Conversion Tables for Wire and Sheet Metal Gages	9-74

 ©Tubular Exchanger Manufacturers Association, Inc.

TABLE D-1

DIMENSIONS OF WELDED AND SEAMLESS PIPE

NOMINAL PIPE SIZE	OUTSIDE DIAM.	NOMINAL WALL THICKNESS FOR														
		SCHED 5S*	SCHED 10S*	SCHED 10	SCHED 20	SCHED 30	STANDARD†	SCHED 40	SCHED 60	EXTRA STRONG §	SCHED 80	SCHED 100	SCHED 120	SCHED 140	SCHED 160	XX STRONG
1/8	0.405		0.049				0.068	0.068		0.095	0.095					
1/4	0.540		0.065				0.088	0.088		0.119	0.119					
3/8	0.675		0.065				0.091	0.091		0.126	0.126					
1/2	0.840	0.065	0.083				0.109	0.109		0.147	0.147				0.188	0.294
3/4	1.050	0.065	0.083				0.113	0.113		0.154	0.154				0.219	0.308
1	1.315	0.065	0.109				0.133	0.133		0.179	0.179				0.250	0.358
1 1/4	1.660	0.065	0.109				0.140	0.140		0.191	0.191				0.250	0.382
1 1/2	1.900	0.065	0.109				0.145	0.145		0.200	0.200				0.281	0.400
2	2.375	0.065	0.109				0.154	0.154		0.218	0.218				0.344	0.436
2 1/2	2.875	0.083	0.120				0.203	0.203		0.276	0.276				0.375	0.552
3	3.500	0.083	0.120				0.216	0.216		0.300	0.300				0.438	0.600
3 1/2	4.000	0.083	0.120				0.226	0.226		0.318	0.318					0.636
4	4.500	0.083	0.120				0.237	0.237		0.337	0.337		0.438		0.531	0.674
5	5.563	0.109	0.134				0.258	0.258		0.375	0.375		0.500		0.625	0.750
6	6.625	0.109	0.134				0.280	0.280		0.432	0.432		0.562		0.719	0.864
8	8.625	0.109	0.148		0.250	0.277	0.322	0.322	0.406	0.500	0.500	0.594	0.719	0.812	0.906	0.875
10	10.75	0.134	0.165		0.250	0.307	0.365	0.365	0.500	0.500	0.594	0.719	0.844	1.000	1.125	1.000
12	12.75	0.156	0.180		0.250	0.330	0.375	0.406	0.562	0.500	0.688	0.844	1.000	1.125	1.312	1.000
14 O.D.	14.0	0.156	0.188	0.250	0.312	0.375	0.375	0.438	0.594	0.500	0.750	0.938	1.094	1.250	1.406	
16 O.D.	16.0	0.165	0.188	0.250	0.312	0.375	0.375	0.500	0.656	0.500	0.844	1.031	1.219	1.438	1.594	
18 O.D.	18.0	0.165	0.188	0.250	0.312	0.438	0.375	0.562	0.750	0.500	0.938	1.156	1.375	1.562	1.781	
20 O.D.	20.0	0.188	0.218	0.250	0.375	0.500	0.375	0.594	0.812	0.500	1.031	1.281	1.500	1.750	1.969	
22 O.D.	22.0	0.188	0.218	0.250	0.375	0.500	0.375		0.875	0.500	1.125	1.375	1.625	1.875	2.125	
24 O.D.	24.0	0.218	0.250	0.250	0.375	0.562	0.375	0.688	0.969	0.500	1.219	1.531	1.812	2.062	2.344	
26 O.D.	26.0			0.312	0.500		0.375			0.500						
28 O.D.	28.0			0.312	0.500	0.625	0.375			0.500						
30 O.D.	30.0	0.250	0.312	0.312	0.500	0.625	0.375			0.500						
32 O.D.	32.0			0.312	0.500	0.625	0.375	0.688		0.500						
34 O.D.	34.0			0.312	0.500	0.625	0.375	0.688		0.500						
36 O.D.	36.0			0.312	0.500	0.625	0.375	0.750		0.500						
42 O.D.	42.0						0.375			0.500						

All dimensions are given in inches.

The decimal thicknesses listed for the respective pipe sizes represent their nominal or average wall dimensions. The actual thicknesses may be as much as 12.5% under the nominal thickness because of mill tolerance. Thicknesses shown in bold face are more readily available,

* Schedules 5S and 10S are available in corrosion resistant materials and Schedule 10S is also available in carbon steel.

† Thicknesses shown in italics are available also in stainless steel, under the designation Schedule 40S

§ Thicknesses shown in italics are available also in stainless steel, under the designation Schedule 80S

©Tubular Exchanger Manufacturers Association, Inc.

TABLE D-2

DIMENSIONS OF WELDING FITTINGS

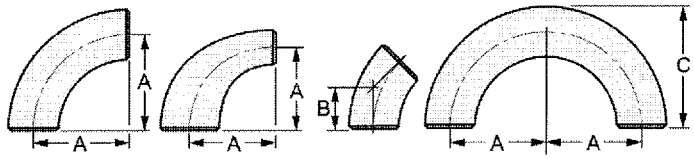

LONG RADIUS WELD ELBOWS

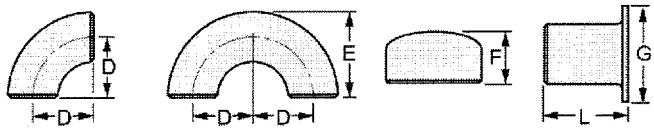

SHORT RADIUS WELD ELBOWS CAPS STUB ENDS

Nom. Pipe Size	A	B	C	D	E	F		L		G
						F_1	F_2	ANSI	Short	
1/2	1 1/2	5/8	1 7/8	...	...	1	1	3	...	1 3/8
3/4	1 1/2	3/4	2	...	...	1	1	3	2	1 11/16
1	1 1/2	7/8	2 3/16	1	1 5/8	1 1/2	1 1/2	4	2	2
1 1/4	1 7/8	1	2 3/4	1 1/4	2 1/16	1 1/2	1 1/2	4	2	2 1/2
1 1/2	2 1/4	1 1/8	3 1/4	1 1/2	2 7/16	1 1/2	1 1/2	4	2	2 7/8
2	3	1 3/8	4 3/16	2	3 3/16	1 1/2	1 3/4	6	2 1/2	3 5/8
2 1/2	3 3/4	1 3/4	5 3/16	2 1/2	3 15/16	1 1/2	2	6	2 1/2	4 1/8
3	4 1/2	2	6 1/4	3	4 3/4	2	2 1/2	6	2 1/2	5
3 1/2	5 1/4	2 1/4	7 1/4	3 1/2	5 1/2	2 1/2	3	6	3	5 1/2
4	6	2 1/2	8 1/4	4	6 1/4	2 1/2	3	6	3	6 3/16
5	7 1/2	3 1/8	10 5/16	5	7 3/4	3	3 1/2	8	3	7 5/16
6	9	3 3/4	12 5/16	6	9 5/16	3 1/2	4	8	3 1/2	8 1/2
8	12	5	16 5/16	8	12 5/16	4	5	8	4	10 5/8
10	15	6 1/4	20 3/8	10	15 3/8	5	6	10	5	12 3/4
12	18	7 1/2	24 3/8	12	18 3/8	6	7	10	6	15
14	21	8 3/4	28	14	21	6 1/2	7 1/2	12	...	16 1/4
16	24	10	32	16	24	7	8	12	...	18 1/2
18	27	11 1/4	36	18	27	8	9	12	...	21
20	30	12 1/2	40	20	30	9	10	12	...	23
24	36	15	48	24	36	10 1/2	12	12	...	27 1/4
30	45	18 1/2	60	30	45	10 1/2	...	...	...	...

F_1 applies to caps of thicknesses ≤ Sch XH

F_2 applies to caps of thicknesses > Sch XH

©Tubular Exchanger Manufacturers Association, Inc.

TABLE D-2 (continued)

DIMENSIONS OF WELDING FITTINGS

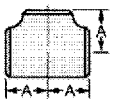

STRAIGHT TEE

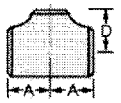

REDUCING TEE

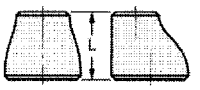

CON. AND ECC. REDUCERS

Nom. Pipe Size	Outlet	A	D	L
1	1	1 1/2	...	...
1	3/4	1 1/2	1 1/2	2
1	1/2	1 1/2	1 1/2	2
1 1/4	1 1/4	1 7/8	...	...
1 1/4	1	1 7/8	1 7/8	2
1 1/4	3/4	1 7/8	1 7/8	2
1 1/4	1/2	1 7/8	1 7/8	2
1 1/2	1 1/2	2 1/4	...	...
1 1/2	1 1/4	2 1/4	2 1/4	2 1/2
1 1/2	1	2 1/4	2 1/4	2 1/2
1 1/2	3/4	2 1/4	2 1/4	2 1/2
1 1/2	1/2	2 1/4	2 1/4	2 1/2
2	2	2 1/2	...	...
2	1 1/2	2 1/2	2 3/8	3
2	1 1/4	2 1/2	2 1/4	3
2	1	2 1/2	2	3
2	3/4	2 1/2	1 3/4	3
2 1/2	2 1/2	3	...	...
2 1/2	2	3	2 3/4	3 1/2
2 1/2	1 1/2	3	2 5/8	3 1/2
2 1/2	1 1/4	3	2 1/2	3 1/2
2 1/2	1	3	2 1/4	3 1/2
3	3	3 3/8	...	...
3	2 1/2	3 3/8	3 1/4	3 1/2
3	2	3 3/8	3	3 1/2
3	1 1/2	3 3/8	2 7/8	3 1/2
3	1 1/4	3 3/8	2 3/4	3 1/2
3 1/2	3 1/2	3 3/4	...	...
3 1/2	3	3 3/4	3 5/8	4
3 1/2	2 1/2	3 3/4	3 1/2	4
3 1/2	2	3 3/4	3 1/4	4
3 1/2	1 1/2	3 3/4	3 1/8	4

Nom. Pipe Size	Outlet	A	D	L
4	4	4 1/8	...	...
4	3 1/2	4 1/8	4	4
4	3	4 1/8	3 7/8	4
4	2 1/2	4 1/8	3 3/4	4
4	2	4 1/8	3 1/2	4
4	1 1/2	4 1/8	3 3/8	4
5	5	4 7/8	...	...
5	4	4 7/8	4 5/8	5
5	3 1/2	4 7/8	4 1/2	5
5	3	4 7/8	4 3/8	5
5	2 1/2	4 7/8	4 1/4	5
5	2	4 7/8	4 1/8	5
6	6	5 5/8	...	...
6	5	5 5/8	5 3/8	5 1/2
6	4	5 5/8	5 1/8	5 1/2
6	3 1/2	5 5/8	5	5 1/2
6	3	5 5/8	4 7/8	5 1/2
6	2 1/2	5 5/8	4 3/4	5 1/2
8	8	7	...	...
8	6	7	6 5/8	6
8	5	7	6 3/8	6
8	4	7	6 1/8	6
8	3 1/2	7	6	6
10	10	8 1/2	...	...
10	8	8 1/2	8	7
10	6	8 1/2	7 5/8	7
10	5	8 1/2	7 1/2	7
10	4	8 1/2	7 1/4	7
12	12	10	...	...
12	10	10	9 1/2	8
12	8	10	9	8
12	6	10	8 5/8	8
12	5	10	8 1/2	8

Nom. Pipe Size	Outlet	A	D	L
14	14	11	...	...
14	12	11	10 5/8	13
14	10	11	10 1/8	13
14	8	11	9 3/4	13
14	6	11	9 3/8	13
16	16	12	...	...
16	14	12	12	14
16	12	12	11 5/8	14
16	10	12	11 1/8	14
16	8	12	10 3/4	14
16	6	12	10 3/8	14
18	18	13 1/2	...	...
18	16	13 1/2	13	15
18	14	13 1/2	13	15
18	12	13 1/2	12 5/8	15
18	10	13 1/2	12 1/8	15
18	8	13 1/2	11 3/4	15
20	20	15	...	...
20	18	15	14 1/2	20
20	16	15	14	20
20	14	15	14	20
20	12	15	13 5/8	20
20	10	15	13 1/8	20
20	8	15	12 3/4	20
24	24	17	...	...
24	20	17	17	20
24	18	17	16 1/2	20
24	16	17	16	20
24	14	17	16	20
24	12	17	15 5/8	20
24	10	17	15 1/8	20

©Tubular Exchanger Manufacturers Association, Inc.

TABLE D-3
DIMENSIONS OF FLANGES - Part 1A

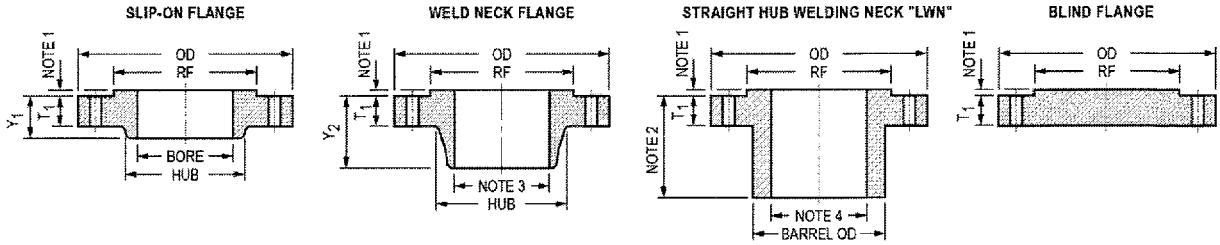

150# FLANGES													
									BOLTING				
NOM. PIPE SIZE	O.D.	R.F.	HUB	BORE	BARREL O.D. (Note 5)	FLG THK. T_1	SLIP ON Y_1	WELD NECK Y_2	NUMBER OF HOLES	SIZE OF HOLES	BOLT CIRCLE	BOLT SIZE	STUD LENGTH
1/2	3.50	1.38	1.19	0.88	1.19	0.38	0.56	1.81	4	5/8	2.38	1/2	2 1/4
3/4	3.88	1.69	1.50	1.09	1.50	0.44	0.56	2.00	4	5/8	2.75	1/2	2 1/2
1	4.25	2.00	1.94	1.36	1.94	0.50	0.62	2.12	4	5/8	3.12	1/2	2 1/2
1 1/4	4.62	2.50	2.31	1.70	2.31	0.56	0.75	2.19	4	5/8	3.50	1/2	2 3/4
1 1/2	5.00	2.88	2.56	1.95	2.56	0.62	0.81	2.38	4	5/8	3.88	1/2	2 3/4
2	6.00	3.62	3.06	2.44	3.06	0.69	0.94	2.44	4	3/4	4.75	5/8	3 1/4
2 1/2	7.00	4.13	3.56	2.94	3.56	0.81	1.06	2.69	4	3/4	5.50	5/8	3 1/2
3	7.50	5.00	4.25	3.57	4.25	0.88	1.12	2.69	4	3/4	6.00	5/8	3 1/2
3 1/2	8.50	5.50	4.81	4.07	4.81	0.88	1.19	2.75	8	3/4	7.00	5/8	3 1/2
4	9.00	6.19	5.31	4.57	5.31	0.88	1.25	2.94	8	3/4	7.50	5/8	3 1/2
5	10.00	7.31	6.44	5.66	6.44	0.88	1.38	3.44	8	7/8	8.50	3/4	3 3/4
6	11.00	8.50	7.56	6.72	7.56	0.94	1.50	3.44	8	7/8	9.50	3/4	4
8	13.50	10.62	9.69	8.72	9.69	1.06	1.69	3.94	8	7/8	11.75	3/4	4 1/4
10	16.00	12.75	12.00	10.88	12.00	1.12	1.88	3.94	12	1	14.25	7/8	4 1/2
12	19.00	15.00	14.38	12.88	14.38	1.19	2.12	4.44	12	1	17.00	7/8	4 3/4
14	21.00	16.25	15.75	14.14	15.75	1.31	2.19	4.94	12	1 1/8	18.75	1	5 1/4
16	23.50	18.50	18.00	16.16	18.00	1.38	2.44	4.94	16	1 1/8	21.25	1	5 1/4
18	25.00	21.00	19.88	18.18	19.88	1.50	2.62	5.44	16	1 1/4	22.75	1 1/8	5 3/4
20	27.50	23.00	22.00	20.20	22.00	1.62	2.81	5.62	20	1 1/4	25.00	1 1/8	6 1/4
22	29.50	25.25	24.00	22.22	24.00	1.75	3.06	5.82	20	1 3/8	27.25	1 1/4	6 3/4
24	32.00	27.25	26.12	24.25	26.12	1.81	3.19	5.94	20	1 3/8	29.50	1 1/4	6 3/4

300# FLANGES													
									BOLTING				
NOM. PIPE SIZE	O.D.	R.F.	HUB	BORE	BARREL O.D. (Note 5)	FLG THK. T_1	SLIP ON Y_1	WELD NECK Y_2	NUMBER OF HOLES	SIZE OF HOLES	BOLT CIRCLE	BOLT SIZE	STUD LENGTH
1/2	3.75	1.38	1.50	0.88	1.50	0.50	0.81	2.00	4	5/8	2.62	1/2	2 1/2
3/4	4.62	1.69	1.88	1.09	1.88	0.56	0.94	2.19	4	3/4	3.25	5/8	3
1	4.88	2.00	2.12	1.36	2.12	0.62	1.00	2.38	4	3/4	3.50	5/8	3
1 1/4	5.25	2.50	2.00	1.70	2.00	0.69	1.00	2.50	4	3/4	3.88	5/8	3 1/4
1 1/2	6.12	2.88	2.75	1.95	2.75	0.75	1.13	2.63	4	7/8	4.50	3/4	3 1/2
2	6.50	3.63	3.31	2.44	3.31	0.81	1.25	2.69	8	3/4	5.00	5/8	3 1/2
2 1/2	7.50	4.13	3.94	2.94	3.94	0.94	1.44	2.94	8	7/8	5.88	3/4	4
3	8.25	5.00	4.62	3.57	4.62	1.06	1.63	3.06	8	7/8	6.62	3/4	4 1/4
3 1/2	9.00	5.50	5.25	4.07	5.25	1.12	1.69	3.13	8	7/8	7.25	3/4	4 1/4
4	10.00	6.19	5.75	4.57	5.75	1.19	1.82	3.32	8	7/8	7.88	3/4	4 1/2
5	11.00	7.31	7.00	5.66	7.00	1.31	1.94	3.82	8	7/8	9.25	3/4	4 3/4
6	12.50	8.50	8.12	6.72	8.12	1.38	2.00	3.82	12	7/8	10.62	3/4	4 3/4
8	15.00	10.63	10.25	8.72	10.25	1.56	2.38	4.32	12	1	13.00	7/8	5 1/2
10	17.50	12.75	12.62	10.88	12.62	1.81	2.56	4.56	16	1 1/8	15.25	1	6 1/4
12	20.50	15.00	14.75	12.88	14.75	1.94	2.82	5.06	16	1 1/4	17.75	1 1/8	6 3/4
14	23.00	16.25	16.75	14.14	16.75	2.06	2.94	5.56	20	1 1/4	20.25	1 1/8	7
16	25.50	18.50	19.00	16.16	19.00	2.19	3.19	5.69	20	1 3/8	22.50	1 1/4	7 1/2
18	28.00	21.00	21.00	18.18	21.00	2.31	3.44	6.19	24	1 3/8	24.75	1 1/4	7 3/4
20	30.50	23.00	23.12	20.20	23.12	2.44	3.69	6.32	24	1 3/8	27.00	1 1/4	8
22	33.00	25.25	25.25	22.22	25.25	2.56	3.94	6.44	24	1 5/8	29.25	1 1/2	9
24	36.00	27.25	27.62	24.25	27.62	2.69	4.13	6.56	24	1 5/8	32.00	1 1/2	9

Notes:

1. Use of a raised face is optional, standard height is 1/16.
2. Straight hub welding flange length specified by purchaser.
3. Bore to equal standard wall pipe ID unless otherwise specified.
4. Bore to equal nominal pipe size unless otherwise specified.
5. Larger barrel diameters may be available as an industry standard.
6. Stud length based upon using standard raised face with mating flange and 1/8" thick gasket.
7. All dimensions are in inches.

©Tubular Exchanger Manufacturers Association, Inc.

TABLE D-3 (continued)
DIMENSIONS OF FLANGES – Part 1B

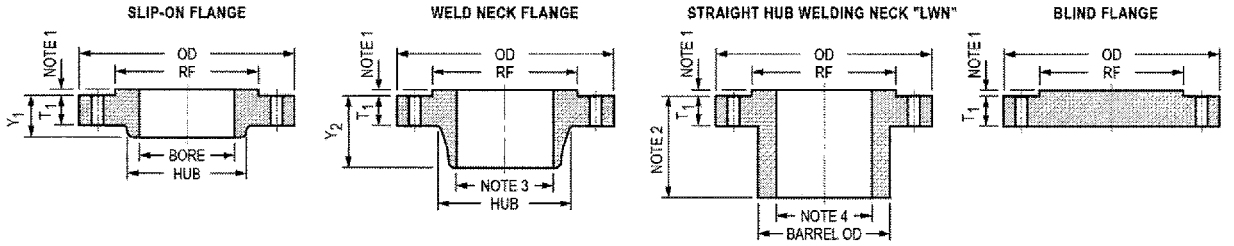

400# FLANGES													
									BOLTING				
NOM. PIPE SIZE	O.D.	R.F.	HUB	BORE	BARREL O.D. (Note 5)	FLG THK. T_1	SLIP ON Y_1	WELD NECK Y_2	NUMBER OF HOLES	SIZE OF HOLES	BOLT CIRCLE	BOLT SIZE	STUD LENGTH
1/2	3.75	1.38	1.50	0.88	1.50	0.56	0.88	2.06	4	5/8	2.62	1/2	3
3/4	4.62	1.69	1.88	1.09	1.88	0.62	1.00	2.25	4	3/4	3.25	5/8	3 1/2
1	4.88	2.00	2.12	1.36	2.12	0.69	1.06	2.44	4	3/4	3.50	5/8	3 1/2
1 1/4	5.25	2.50	2.50	1.70	2.50	0.81	1.12	2.62	4	3/4	3.88	5/8	3 3/4
1 1/2	6.12	2.88	2.75	1.95	2.75	0.88	1.25	2.75	4	7/8	4.50	3/4	4 1/4
2	6.50	3.62	3.31	2.44	3.31	1.00	1.44	2.88	8	3/4	5.00	5/8	4 1/4
2 1/2	7.50	4.13	3.94	2.94	3.94	1.12	1.62	3.12	8	7/8	5.88	3/4	4 3/4
3	8.25	5.00	4.62	3.57	4.62	1.25	1.81	3.25	8	7/8	6.62	3/4	5
3 1/2	9.00	5.50	5.25	4.07	5.25	1.38	1.94	3.38	8	1	7.25	7/8	5 1/2
4	10.00	6.19	5.75	4.57	5.75	1.38	2.00	3.50	8	1	7.88	7/8	5 1/2
5	11.00	7.31	7.00	5.66	7.00	1.50	2.12	4.00	8	1	9.25	7/8	5 3/4
6	12.50	8.50	8.12	6.72	8.12	1.62	2.25	4.06	12	1	10.62	7/8	6
8	15.00	10.62	10.25	8.72	10.25	1.88	2.69	4.62	12	1 1/8	13.00	1	6 3/4
10	17.50	12.75	12.62	10.88	12.62	2.13	2.88	4.88	16	1 1/4	15.25	1 1/8	7 1/2
12	20.50	15.00	14.75	12.88	14.75	2.25	3.12	5.38	16	1 3/8	17.75	1 1/4	8
14	23.00	16.25	16.75	14.14	16.75	2.38	3.31	5.88	20	1 3/8	20.25	1 1/4	8 1/4
16	25.50	18.50	19.00	16.16	19.00	2.50	3.69	6.00	20	1 1/2	22.50	1 3/8	8 3/4
18	28.00	21.00	21.00	18.18	21.00	2.62	3.88	6.50	24	1 1/2	24.75	1 3/8	9
20	30.50	23.00	23.12	20.20	23.12	2.75	4.00	6.62	24	1 5/8	27.00	1 1/2	9 1/2
22	33.00	25.25	25.25	22.22	25.25	2.88	4.25	6.75	24	1 3/4	29.25	1 5/8	10
24	36.00	27.25	27.62	24.25	27.62	3.00	4.50	6.88	24	1 7/8	32.00	1 3/4	10 1/2

600# FLANGES													
									BOLTING				
NOM. PIPE SIZE	O.D.	R.F.	HUB	BORE	BARREL O.D. (Note 5)	FLG THK. T_1	SLIP ON Y_1	WELD NECK Y_2	NUMBER OF HOLES	SIZE OF HOLES	BOLT CIRCLE	BOLT SIZE	STUD LENGTH
1/2	3.75	1.38	1.50	0.88	1.50	0.56	0.88	2.06	4	5/8	2.62	1/2	3
3/4	4.62	1.69	1.88	1.09	1.88	0.62	1.00	2.25	4	3/4	3.25	5/8	3 1/2
1	4.88	2.00	2.12	1.36	2.12	0.69	1.06	2.44	4	3/4	3.50	5/8	3 1/2
1 1/4	5.25	2.50	2.50	1.70	2.50	0.81	1.12	2.62	4	3/4	3.88	5/8	3 3/4
1 1/2	6.12	2.88	2.75	1.95	2.75	0.88	1.25	2.75	4	7/8	4.50	3/4	4 1/4
2	6.50	3.62	3.31	2.44	3.31	1.00	1.44	2.88	8	3/4	5.00	5/8	4 1/4
2 1/2	7.50	4.13	3.94	2.94	3.94	1.12	1.62	3.12	8	7/8	5.88	3/4	4 3/4
3	8.25	5.00	4.62	3.57	4.62	1.25	1.81	3.25	8	7/8	6.62	3/4	5
3 1/2	9.00	5.50	5.25	4.07	5.25	1.38	1.94	3.38	8	1	7.25	7/8	5 1/2
4	10.75	6.19	6.00	4.57	6.00	1.50	2.12	4.00	8	1	8.50	7/8	5 3/4
5	13.00	7.31	7.44	5.66	7.44	1.75	2.38	4.50	8	1 1/8	10.50	1	6 1/2
6	14.00	8.50	8.75	6.72	8.75	1.88	2.62	4.62	12	1 1/8	11.50	1	6 3/4
8	16.50	10.62	10.75	8.72	10.75	2.19	3.00	5.25	12	1 1/4	13.75	1 1/8	7 1/2
10	20.00	12.75	13.50	10.88	13.50	2.50	3.38	6.00	16	1 3/8	17.00	1 1/4	8 1/2
12	22.00	15.00	15.75	12.88	15.75	2.62	3.62	6.12	20	1 3/8	19.25	1 1/4	8 3/4
14	23.75	16.25	17.00	14.14	17.00	2.75	3.69	6.50	20	1 1/2	20.75	1 3/8	9 1/4
16	27.00	18.50	19.50	16.16	19.50	3.00	4.19	7.00	20	1 5/8	23.75	1 1/2	10
18	29.25	21.00	21.50	18.18	21.50	3.25	4.62	7.25	20	1 3/4	25.75	1 5/8	10 3/4
20	32.00	23.00	24.00	20.20	24.00	3.50	5.00	7.50	24	1 3/4	28.50	1 5/8	11 1/4
22	24.25	25.25	26.25	22.22	26.25	3.75	5.25	7.75	24	1 7/8	30.62	1 3/4	12
24	37.00	27.25	28.25	24.25	28.25	4.00	5.50	8.00	24	2	33.00	1 7/8	13

Notes:

1. Use of a raised face is optional, standard height is 1/4.
2. Straight hub welding flange length specified by purchaser.
3. Bore to equal standard wall pipe ID unless otherwise specified.
4. Bore to equal nominal pipe size unless otherwise specified.
5. Larger barrel diameters may be available as an industry standard.
6. Stud length based upon using standard raised face with mating flange and 1/8" thick gasket.
7. All dimensions are in inches.

©Tubular Exchanger Manufacturers Association, Inc.

TABLE D-3 (continued)
DIMENSIONS OF FLANGES – Part 1C

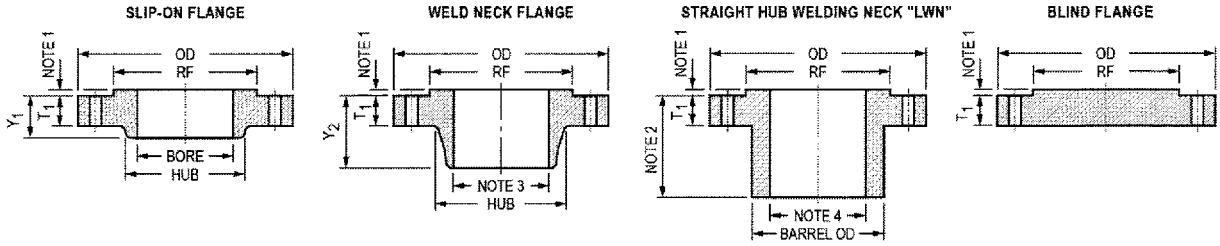

900# FLANGES													
									BOLTING				
NOM. PIPE SIZE	O.D.	R.F.	HUB	BORE	BARREL O.D. (Note 5)	FLG THK. T_1	SLIP ON Y_1	WELD NECK Y_2	NUMBER OF HOLES	SIZE OF HOLES	BOLT CIRCLE	BOLT SIZE	STUD LENGTH
1/2	4.75	1.38	1.50	0.88	1.50	0.88	1.25	2.38	4	7/8	3.25	3/4	4 1/4
3/4	5.12	1.69	1.75	1.09	1.75	1.00	1.38	2.75	4	7/8	3.50	3/4	4 1/2
1	5.88	2.00	2.06	1.36	2.06	1.12	1.62	2.88	4	1	4.00	7/8	5
1 1/4	6.25	2.50	2.50	1.70	2.50	1.12	1.62	2.88	4	1	4.38	7/8	5
1 1/2	7.00	2.88	2.75	1.95	2.75	1.25	1.75	3.25	4	1 1/8	4.88	1	5 1/2
2	8.50	3.62	4.12	2.44	4.12	1.50	2.25	4.00	8	1	6.50	7/8	5 3/4
2 1/2	9.62	4.13	4.88	2.94	4.88	1.62	2.50	4.12	8	1 1/8	7.50	1	6 1/4
3	9.50	5.00	5.00	3.57	5.00	1.50	2.12	4.00	8	1	7.50	7/8	5 3/4
4	11.50	6.19	6.25	4.57	6.25	1.75	2.75	4.50	8	1 1/4	9.25	1 1/8	6 3/4
5	13.75	7.31	7.50	5.66	7.50	2.00	3.12	5.00	8	1 3/8	11.00	1 1/4	7 1/2
6	15.00	8.50	9.25	6.72	9.25	2.19	3.38	5.50	12	1 1/4	12.50	1 1/8	7 1/2
8	18.50	10.62	11.75	8.72	11.75	2.50	4.00	6.38	12	1 1/2	15.50	1 3/8	8 3/4
10	21.50	12.75	14.50	10.88	14.50	2.75	4.25	7.25	16	1 1/2	18.50	1 3/8	9 1/4
12	24.00	15.00	16.50	12.88	16.50	3.12	4.62	7.88	20	1 1/2	21.00	1 3/8	10
14	25.25	16.25	17.75	14.14	17.75	3.38	5.12	8.38	20	1 5/8	22.00	1 1/2	10 3/4
16	27.75	18.50	20.00	16.16	20.00	3.50	5.25	8.50	20	1 3/4	24.25	1 5/8	11 1/4
18	31.00	21.00	22.25	18.18	22.25	4.00	6.00	9.00	20	2	27.00	1 7/8	12 3/4
20	33.75	23.00	24.50	20.20	24.50	4.25	6.25	9.75	20	2 1/8	29.50	2	13 3/4
24	41.00	27.25	29.50	24.25	29.50	5.50	8.00	11.50	20	2 5/8	35.50	2 1/2	17 1/4

1500# FLANGES													
									BOLTING				
NOM. PIPE SIZE	O.D.	R.F.	HUB	BORE	BARREL O.D. (Note 5)	FLG THK. T_1	SLIP ON Y_1	WELD NECK Y_2	NUMBER OF HOLES	SIZE OF HOLES	BOLT CIRCLE	BOLT SIZE	STUD LENGTH
1/2	4.75	1.38	1.50	0.88	1.50	0.88	1.25	2.38	4	7/8	3.25	3/4	4 1/4
3/4	5.12	1.69	1.75	1.09	1.75	1.00	1.38	2.75	4	7/8	3.50	3/4	4 1/2
1	5.88	2.00	2.06	1.36	2.06	1.12	1.62	2.88	4	1	4.00	7/8	5
1 1/4	6.25	2.50	2.50	1.70	2.50	1.12	1.62	2.88	4	1	4.38	7/8	5
1 1/2	7.00	2.88	2.75	1.95	2.75	1.25	1.75	3.25	4	1 1/8	4.88	1	5 1/2
2	8.50	3.62	4.12	2.44	4.12	1.50	2.25	4.00	8	1	6.50	7/8	5 3/4
2 1/2	9.62	4.12	4.88	2.94	4.88	1.62	2.50	4.12	8	1 1/8	7.50	1	6 1/4
3	10.50	5.00	5.25	-	5.25	1.88	-	4.62	8	1 1/4	8.00	1 1/8	7
4	12.25	6.19	6.38	-	6.38	2.13	-	4.88	8	1 3/8	9.50	1 1/4	7 3/4
5	14.75	7.31	7.75	-	7.75	2.88	-	6.12	8	1 5/8	11.50	1 1/2	9 3/4
6	15.50	8.50	9.00	-	9.00	3.25	-	6.75	12	1 1/2	12.50	1 3/8	10 1/4
8	19.00	10.62	11.50	-	11.50	3.63	-	8.38	12	1 3/4	15.50	1 5/8	11 1/2
10	23.00	12.75	14.50	-	14.50	4.25	-	10.00	12	2	19.00	1 7/8	13 1/4
12	26.50	15.00	17.75	-	17.75	4.88	-	11.12	16	2 1/8	22.50	2	14 3/4
14	29.50	16.25	19.50	-	19.50	5.25	-	11.75	16	2 3/8	25.00	2 1/4	16
16	32.50	18.50	21.75	-	21.75	5.75	-	12.25	16	2 5/8	27.75	2 1/2	17 1/2
18	36.00	21.00	23.50	-	23.50	6.38	-	12.88	16	2 7/8	30.50	2 3/4	19 1/2
20	38.75	23.00	25.25	-	25.25	7.00	-	14.00	16	3 1/8	32.75	3	21 1/4
24	46.00	27.25	30.00	-	30.00	8.00	-	16.00	16	3 5/8	39.00	3 1/2	24 1/4

Notes:

1. Use of a raised face is optional, standard height is 1/4.
2. Straight hub welding flange length specified by purchaser.
3. Bore to equal standard wall pipe ID unless otherwise specified.
4. Bore to equal nominal pipe size unless otherwise specified.
5. Larger barrel diameters may be available as an industry standard.
6. Stud length based upon using standard raised face with mating flange and 1/8" thick gasket.
7. All dimensions are in inches.

©Tubular Exchanger Manufacturers Association, Inc.

TABLE D-3 (continued)
DIMENSIONS OF FLANGES – Part 1D

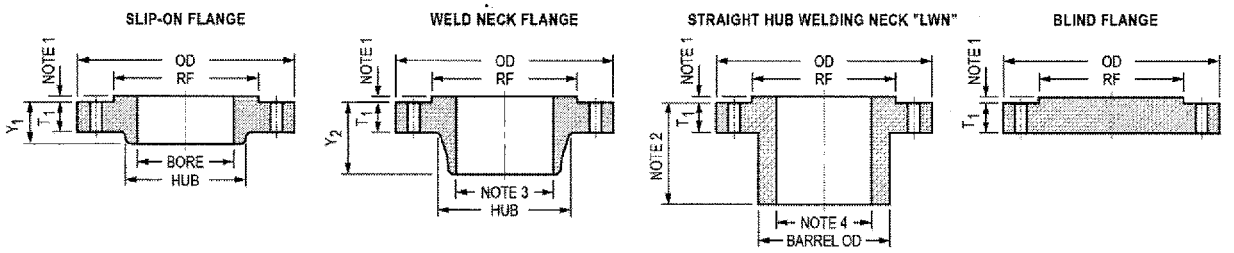

2500# FLANGES													
									BOLTING				
NOM. PIPE SIZE	O.D.	R.F.	HUB	BORE	BARREL O.D. (Note 5)	FLG THK. T_1	SLIP ON Y_1	WELD NECK Y_2	NUMBER OF HOLES	SIZE OF HOLES	BOLT CIRCLE	BOLT SIZE	STUD LENGTH
1/2	5.25	1.38	1.69	-	1.69	1.19	-	2.88	4	7/8	3.50	3/4	4 3/4
3/4	5.50	1.69	2.00	-	2.00	1.25	-	3.12	4	7/8	3.75	3/4	5
1	6.25	2.00	2.25	-	2.25	1.38	-	3.50	4	1	4.25	7/8	5 1/2
1 1/4	7.25	2.50	2.88	-	2.88	1.50	-	3.75	4	1 1/8	5.12	1	6
1 1/2	8.00	2.88	3.12	-	3.12	1.75	-	4.38	4	1 1/4	5.75	1 1/8	6 3/4
2	9.25	3.62	3.75	-	3.75	2.00	-	5.00	8	1 1/8	6.75	1	7
2 1/2	10.50	4.13	4.50	-	4.50	2.25	-	5.62	8	1 1/4	7.75	1 1/8	7 3/4
3	12.00	5.00	5.25	-	5.25	2.62	-	6.62	8	1 3/8	9.00	1 1/4	8 3/4
4	14.00	6.19	6.50	-	6.50	3.00	-	7.50	8	1 5/8	10.75	1 1/2	10
5	16.50	7.31	8.00	-	8.00	3.62	-	9.00	8	1 7/8	12.75	1 3/4	11 3/4
6	19.00	8.50	9.25	-	9.25	4.25	-	10.75	8	2 1/8	14.50	2	13 1/2
8	21.75	10.62	12.00	-	12.00	5.00	-	12.50	12	2 1/8	17.25	2	15
10	26.50	12.75	14.75	-	14.75	6.50	-	16.50	12	2 5/8	21.25	2 1/2	19 1/4
12	30.00	15.00	17.38	-	17.38	7.25	-	18.25	12	2 7/8	24.38	2 3/4	21 1/4

Notes:

1. Use of a raised face is optional, standard height is 1/4.
2. Straight hub welding flange length specified by purchaser.
3. Bore to equal standard wall pipe ID unless otherwise specified.
4. Bore to equal nominal pipe size unless otherwise specified.
5. Larger barrel diameters may be available as an industry standard.
6. Stud length based upon using standard raised face with mating flange and 1/8" thick gasket.
7. All dimensions are in inches.

©Tubular Exchanger Manufacturers Association, Inc.

TABLE D-3 (continued)
DIMENSIONS OF FLANGES – Part 2A

LAP JOINT FLANGE

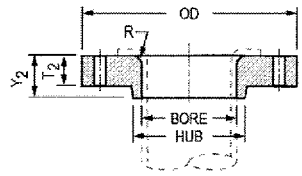

150# FLANGES											
							BOLTING				
NOM. PIPE SIZE	O.D.	HUB	BORE	FLG THK. T_2	Y_2	RADIUS R	NUMBER OF HOLES	SIZE OF HOLES	BOLT CIRCLE	BOLT SIZE	STUD LENGTH SEE NOTE 1
1/2	3.50	1.19	0.90	0.44	0.62	0.12	4	5/8	2.38	1/2	2 1/4
3/4	3.88	1.50	1.11	0.50	0.62	0.12	4	5/8	2.75	1/2	2 1/2
1	4.25	1.94	1.38	0.56	0.69	0.12	4	5/8	3.12	1/2	2 1/2
1 1/4	4.62	2.31	1.72	0.62	0.81	0.19	4	5/8	3.50	1/2	2 3/4
1 1/2	5.00	2.56	1.97	0.69	0.88	0.25	4	5/8	3.88	1/2	2 3/4
2	6.00	3.06	2.46	0.75	1.00	0.31	4	3/4	4.75	5/8	3 1/4
2 1/2	7.00	3.56	2.97	0.88	1.12	0.31	4	3/4	5.50	5/8	3 1/2
3	7.50	4.25	3.60	0.94	1.19	0.38	4	3/4	6.00	5/8	3 1/2
3 1/2	8.50	4.81	4.10	0.94	1.25	0.38	8	3/4	7.00	5/8	3 1/2
4	9.00	5.31	4.60	0.94	1.31	0.44	8	3/4	7.50	5/8	3 1/2
5	10.00	6.44	5.69	0.94	1.44	0.44	8	7/8	8.50	3/4	3 3/4
6	11.00	7.56	6.75	1.00	1.56	0.50	8	7/8	9.50	3/4	4
8	13.50	9.69	8.75	1.12	1.75	0.50	8	7/8	11.75	3/4	4 1/4
10	16.00	12.00	10.92	1.19	1.94	0.50	12	1	14.25	7/8	4 1/2
12	19.00	14.38	12.92	1.25	2.19	0.50	12	1	17.00	7/8	4 3/4
14	21.00	15.75	14.18	1.38	3.12	0.50	12	1 1/8	18.75	1	5 1/4
16	23.50	18.00	16.19	1.44	3.44	0.50	16	1 1/8	21.25	1	5 1/4
18	25.00	19.88	18.20	1.56	3.81	0.50	16	1 1/4	22.75	1 1/8	5 3/4
20	27.50	22.00	20.25	1.69	4.06	0.50	20	1 1/4	25.00	1 1/8	6 1/4
22	29.50	24.00	22.25	1.81	4.25	0.50	20	1 3/8	27.25	1 1/4	6 3/4
24	32.00	26.12	24.25	1.88	4.38	0.50	20	1 3/8	29.50	1 1/4	6 3/4

300# FLANGES											
							BOLTING				
NOM. PIPE SIZE	O.D.	HUB	BORE	FLG THK. T_2	Y_2	RADIUS R	NUMBER OF HOLES	SIZE OF HOLES	BOLT CIRCLE	BOLT SIZE	STUD LENGTH SEE NOTE 1
1/2	3.75	1.50	0.90	0.56	0.88	0.12	4	5/8	2.62	1/2	2 1/2
3/4	4.62	1.88	1.11	0.62	1.00	0.12	4	3/4	3.25	5/8	3
1	4.88	2.12	1.38	0.69	1.06	0.12	4	3/4	3.50	5/8	3
1 1/4	5.25	2.50	1.72	0.75	1.06	0.19	4	3/4	3.88	5/8	3 1/4
1 1/2	6.12	2.75	1.97	0.81	1.19	0.25	4	7/8	4.50	3/4	3 1/2
2	6.50	3.31	2.46	0.88	1.31	0.31	8	3/4	5.00	5/8	3 1/2
2 1/2	7.50	3.94	2.97	1.00	1.50	0.31	8	7/8	5.88	3/4	4
3	8.25	4.62	3.60	1.12	1.69	0.38	8	7/8	6.62	3/4	4 1/4
3 1/2	9.00	5.25	4.10	1.19	1.75	0.38	8	7/8	7.25	3/4	4 1/4
4	10.00	5.75	4.60	1.25	1.88	0.44	8	7/8	7.88	3/4	4 1/2
5	11.00	7.00	5.69	1.38	2.00	0.44	8	7/8	9.25	3/4	4 3/4
6	12.50	8.12	6.75	1.44	2.06	0.50	12	7/8	10.62	3/4	4 3/4
8	15.00	10.25	8.75	1.62	2.44	0.50	12	1	13.00	7/8	5 1/2
10	17.50	12.62	10.92	1.88	3.75	0.50	16	1 1/8	15.25	1	6 1/4
12	20.50	14.75	12.92	2.00	4.00	0.50	16	1 1/4	17.75	1 1/8	6 3/4
14	23.00	16.75	14.18	2.12	4.38	0.50	20	1 1/4	20.25	1 1/8	7
16	25.50	19.00	16.19	2.25	4.75	0.50	20	1 3/8	22.50	1 1/4	7 1/2
18	28.00	21.00	18.20	2.38	5.12	0.50	24	1 3/8	24.75	1 1/4	7 3/4
20	30.50	23.12	20.25	2.50	5.50	0.50	24	1 3/8	27.00	1 1/4	8
22	33.00	25.25	22.25	2.62	5.69	0.50	24	1 5/8	29.25	1 1/2	9
24	36.00	27.62	24.25	2.75	6.00	0.50	24	1 5/8	32.00	1 1/2	9

Note 1. Stud length based upon using Standard Weight pipe and bolted to mating flange with 1/8" thick gasket.

©Tubular Exchanger Manufacturers Association, Inc.

TABLE D-3 (continued)
DIMENSIONS OF FLANGES – Part 2B

LAP JOINT FLANGE

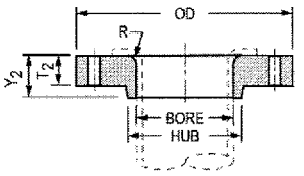

400# FLANGES											
							BOLTING				
NOM. PIPE SIZE	O.D.	HUB	BORE	FLG THK. T_2	Y_2	RADIUS R	NUMBER OF HOLES	SIZE OF HOLES	BOLT CIRCLE	BOLT SIZE	STUD LENGTH SEE NOTE 1
1/2	3.75	1.50	0.90	0.56	0.88	0.12	4	5/8	2.62	1/2	3
3/4	4.62	1.88	1.11	0.62	1.00	0.12	4	3/4	3.25	5/8	3 1/2
1	4.88	2.12	1.38	0.69	1.06	0.12	4	3/4	3.50	5/8	3 1/2
1 1/4	5.25	2.50	1.72	0.81	1.12	0.19	4	3/4	3.88	5/8	3 3/4
1 1/2	6.12	2.75	1.97	0.88	1.25	0.25	4	7/8	4.50	3/4	4 1/4
2	6.50	3.31	2.46	1.00	1.44	0.31	8	3/4	5.00	5/8	4 1/4
2 1/2	7.50	3.94	2.97	1.12	1.62	0.31	8	7/8	5.88	3/4	4 3/4
3	8.25	4.62	3.60	1.25	1.81	0.38	8	7/8	6.62	3/4	5
3 1/2	9.00	5.25	4.10	1.38	1.94	0.38	8	1	7.25	7/8	5 1/2
4	10.00	5.75	4.60	1.38	2.00	0.44	8	1	7.88	7/8	5 1/2
5	11.00	7.00	5.69	1.50	2.12	0.44	8	1	9.25	7/8	5 3/4
6	12.50	8.12	6.75	1.62	2.25	0.50	12	1	10.62	7/8	6
8	15.00	10.25	8.75	1.88	2.69	0.50	12	1 1/8	13.00	1	6 3/4
10	17.50	12.62	10.92	2.12	4.00	0.50	16	1 1/4	15.25	1 1/8	7 1/2
12	20.50	14.75	12.92	2.25	4.25	0.50	16	1 3/8	17.75	1 1/4	8
14	23.00	16.75	14.18	2.38	4.62	0.50	20	1 3/8	20.25	1 1/4	8 1/4
16	25.50	19.00	16.19	2.50	5.00	0.50	20	1 1/2	22.50	1 3/8	8 3/4
18	28.00	21.00	18.20	2.62	5.38	0.50	24	1 1/2	24.75	1 3/8	9
20	30.50	23.13	20.25	2.75	5.75	0.50	24	1 5/8	27.00	1 1/2	9 1/2
22	33.00	25.25	22.25	2.88	6.00	0.50	24	1 3/4	29.25	1 5/8	10
24	36.00	27.62	24.25	3.00	6.25	0.50	24	1 7/8	32.00	1 3/4	10 1/2

600# FLANGES											
							BOLTING				
NOM. PIPE SIZE	O.D.	HUB	BORE	FLG THK. T_2	Y_2	RADIUS R	NUMBER OF HOLES	SIZE OF HOLES	BOLT CIRCLE	BOLT SIZE	STUD LENGTH SEE NOTE 1
1/2	3.75	1.50	0.90	0.56	0.88	0.12	4	5/8	2.62	1/2	3
3/4	4.62	1.88	1.11	0.62	1.00	0.12	4	3/4	3.25	5/8	3 1/2
1	4.88	2.12	1.38	0.69	1.06	0.12	4	3/4	3.50	5/8	3 1/2
1 1/4	5.25	2.50	1.72	0.81	1.12	0.19	4	3/4	3.88	5/8	3 3/4
1 1/2	6.12	2.75	1.97	0.88	1.25	0.25	4	7/8	4.50	3/4	4 1/4
2	6.50	3.31	2.46	1.00	1.44	0.31	8	3/4	5.00	5/8	4 1/4
2 1/2	7.50	3.94	2.97	1.12	1.62	0.31	8	7/8	5.88	3/4	4 3/4
3	8.25	4.62	3.60	1.25	1.81	0.38	8	7/8	6.62	3/4	5
3 1/2	9.00	5.25	4.10	1.38	1.94	0.38	8	1	7.25	7/8	5 1/2
4	10.75	6.00	4.60	1.50	2.12	0.44	8	1	8.50	7/8	5 3/4
5	13.00	7.44	5.69	1.75	2.38	0.44	8	1 1/8	10.50	1	6 1/2
6	14.00	8.75	6.75	1.88	2.62	0.50	12	1 1/8	11.50	1	6 3/4
8	16.50	10.75	8.75	2.19	3.00	0.50	12	1 1/4	13.75	1 1/8	7 1/2
10	20.00	13.50	10.92	2.50	4.38	0.50	16	1 3/8	17.00	1 1/4	8 1/2
12	22.00	15.75	12.92	2.62	4.62	0.50	20	1 3/8	19.25	1 1/4	8 3/4
14	23.75	17.00	14.18	2.75	5.00	0.50	20	1 1/2	20.75	1 3/8	9 1/4
16	27.00	19.50	16.19	3.00	5.50	0.50	20	1 5/8	23.75	1 1/2	10
18	29.25	21.50	18.20	3.25	6.00	0.50	20	1 3/4	25.75	1 5/8	10 3/4
20	32.00	24.00	20.25	3.50	6.50	0.50	24	1 3/4	28.50	1 5/8	11 1/4
22	24.25	26.25	22.25	3.75	6.88	0.50	24	1 7/8	30.62	1 3/4	12
24	37.00	28.25	24.25	4.00	7.25	0.50	24	2	33.00	1 7/8	13

Note 1. Stud length based upon using Standard Weight pipe and bolted to mating flange with 1/8" thick gasket.

©Tubular Exchanger Manufacturers Association, Inc.

TABLE D-3 (continued)
DIMENSIONS OF FLANGES – Part 2C

LAP JOINT FLANGE

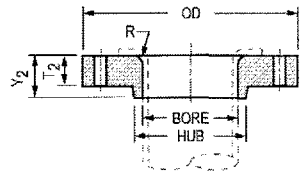

900# FLANGES											
							BOLTING				
NOM. PIPE SIZE	O.D.	HUB	BORE	FLG THK. T_2	Y_2	RADIUS R	NUMBER OF HOLES	SIZE OF HOLES	BOLT CIRCLE	BOLT SIZE	STUD LENGTH SEE NOTE 1
1/2	4.75	1.50	0.90	0.88	1.25	0.12	4	0.88	3.25	3/4	4 1/4
3/4	5.12	1.75	1.11	1.00	1.38	0.12	4	0.88	3.50	3/4	4 1/2
1	5.88	2.06	1.38	1.12	1.62	0.12	4	1.00	4.00	7/8	5
1 1/4	6.25	2.50	1.72	1.12	1.62	0.19	4	1.00	4.38	7/8	5
1 1/2	7.00	2.75	1.97	1.25	1.75	0.25	4	1.13	4.88	1	5 1/2
2	8.50	4.12	2.46	1.50	2.25	0.31	8	1.00	6.50	7/8	5 3/4
2 1/2	9.62	4.88	2.97	1.62	2.50	0.31	8	1.13	7.50	1	6 1/4
3	9.50	5.00	3.60	1.50	2.12	0.38	8	1.00	7.50	7/8	5 3/4
4	11.50	6.25	4.60	1.75	2.75	0.44	8	1.25	9.25	1 1/8	6 3/4
5	13.75	7.50	5.69	2.00	3.12	0.44	8	1.38	11.00	1 1/4	7 1/2
6	15.00	9.25	6.75	2.19	3.38	0.50	12	1.25	12.50	1 1/8	7 1/2
8	18.50	11.75	8.75	2.50	4.50	0.50	12	1.50	15.50	1 3/8	8 3/4
10	21.50	14.50	10.92	2.75	5.00	0.50	16	1.50	18.50	1 3/8	9 1/4
12	24.00	16.50	12.92	3.12	5.62	0.50	20	1.50	21.00	1 3/8	10
14	25.25	17.75	14.18	3.38	6.12	0.50	20	1.63	22.00	1 1/2	10 3/4
16	27.75	20.00	16.19	3.50	6.50	0.50	20	1.75	24.25	1 5/8	11 1/4
18	31.00	22.25	18.20	4.00	7.50	0.50	20	2.00	27.00	1 7/8	12 3/4
20	33.75	24.50	20.25	4.25	8.25	0.50	20	2.13	29.50	2	13 3/4
24	41.00	29.50	24.25	5.50	10.50	0.50	20	2.63	35.50	2 1/2	17 1/4

1500# FLANGES											
							BOLTING				
NOM. PIPE SIZE	O.D.	HUB	BORE	FLG THK. T_2	Y_2	RADIUS R	NUMBER OF HOLES	SIZE OF HOLES	BOLT CIRCLE	BOLT SIZE	STUD LENGTH SEE NOTE 1
1/2	4.75	1.50	0.90	0.88	1.25	0.12	4	0.88	3.25	3/4	4 1/4
3/4	5.12	1.75	1.11	1.00	1.38	0.12	4	0.88	3.50	3/4	4 1/2
1	5.88	2.06	1.38	1.12	1.62	0.12	4	1.00	4.00	7/8	5
1 1/4	6.25	2.50	1.72	1.12	1.62	0.19	4	1.00	4.38	7/8	5
1 1/2	7.00	2.75	1.97	1.25	1.75	0.25	4	1.13	4.88	1	5 1/2
2	8.50	4.12	2.46	1.50	2.25	0.31	8	1.00	6.50	7/8	5 3/4
2 1/2	9.62	4.88	2.97	1.62	2.50	0.31	8	1.13	7.50	1	6 1/4
3	10.50	5.25	3.60	1.88	2.88	0.38	8	1.25	8.00	1 1/8	7
4	12.25	6.38	4.60	2.12	3.56	0.44	8	1.38	9.50	1 1/4	7 3/4
5	14.75	7.75	5.69	2.88	4.12	0.44	8	1.63	11.50	1 1/2	9 3/4
6	15.50	9.00	6.75	3.25	4.69	0.50	12	1.50	12.50	1 3/8	10 1/4
8	19.00	11.50	8.75	3.62	5.62	0.50	12	1.75	15.50	1 5/8	11 1/2
10	23.00	14.50	10.92	4.25	7.00	0.50	12	2.00	19.00	1 7/8	13 1/4
12	26.50	17.75	12.92	4.88	8.62	0.50	16	2.13	22.50	2	14 3/4
14	29.50	19.50	14.18	5.25	9.50	0.50	16	2.38	25.00	2 1/4	16
16	32.50	21.75	16.19	5.75	10.25	0.50	16	2.63	27.75	2 1/2	17 1/2
18	36.00	23.50	18.20	6.38	10.88	0.50	16	2.88	30.50	2 3/4	19 1/2
20	38.75	25.25	20.25	7.00	11.50	0.50	16	3.13	32.75	3	21 1/4
24	46.00	30.00	24.25	8.00	13.00	0.50	16	3.63	39.00	3 1/2	24 1/4

Note 1. Stud length based upon using Standard Weight pipe and bolted to mating flange with 1/8" thick gasket.

©Tubular Exchanger Manufacturers Association, Inc.

TABLE D-3 (continued)
DIMENSIONS OF FLANGES – Part 2D

LAP JOINT FLANGE

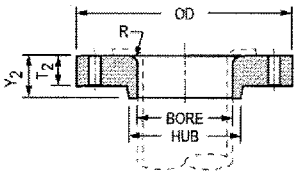

2500# FLANGES											
							BOLTING				
NOM. PIPE SIZE	O.D.	HUB	BORE	FLG THK. T_2	Y_2	RADIUS R	NUMBER OF HOLES	SIZE OF HOLES	BOLT CIRCLE	BOLT SIZE	STUD LENGTH SEE NOTE 1
1/2	5.25	1.69	0.90	1.19	1.56	0.12	4	0.88	3.50	3/4	4 3/4
3/4	5.50	2.00	1.11	1.25	1.69	0.12	4	0.88	3.75	3/4	5
1	6.25	2.25	1.38	1.38	1.88	0.12	4	1.00	4.25	7/8	5 1/2
1 1/4	7.25	2.88	1.72	1.50	2.06	0.19	4	1.13	5.13	1	6
1 1/2	8.00	3.12	1.97	1.75	2.38	0.25	4	1.25	5.75	1 1/8	6 3/4
2	9.25	3.75	2.46	2.00	2.75	0.31	8	1.13	6.75	1	7
2 1/2	10.50	4.50	2.97	2.25	3.12	0.31	8	1.25	7.75	1 1/8	7 3/4
3	12.00	5.25	3.60	2.62	3.62	0.38	8	1.38	9.00	1 1/4	8 3/4
4	14.00	6.50	4.60	3.00	4.25	0.44	8	1.63	10.75	1 1/2	10
5	16.50	8.00	5.69	3.62	5.12	0.44	8	1.88	12.75	1 3/4	11 3/4
6	19.00	9.25	6.75	4.25	6.00	0.50	8	2.13	14.50	2	13 1/2
8	21.75	12.00	8.75	5.00	7.00	0.50	12	2.13	17.25	2	15
10	26.50	14.75	10.92	6.50	9.00	0.50	12	2.63	21.25	2 1/2	19 1/4
12	30.00	17.38	12.92	7.25	10.00	0.50	12	2.88	24.38	2 3/4	21 1/4

Note 1. Stud length based upon using Standard Weight pipe and bolted to mating flange with 1/8" thick gasket.

©Tubular Exchanger Manufacturers Association, Inc.

TABLE D-3 (continued)
DIMENSIONS OF FLANGES – Part 3A

LARGE FLANGE

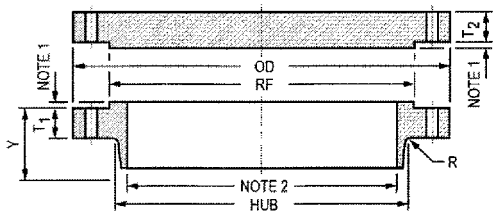

150# SERIES A FLANGE												
NOM. PIPE SIZE	O.D.	R.F.	HUB	FLG THK. T_1	BLIND FLANGE THK. T_2	Y	R	BOLTING				
								NUMBER OF HOLES	SIZE OF HOLES	BOLT CIRCLE	BOLT SIZE	STUD LENGTH
26	34.25	29.50	26.62	2.63	2.63	4.69	0.38	24	1 3/8	31.75	1 1/4	8 3/4
28	36.50	31.50	28.62	2.75	2.75	4.88	0.44	28	1 3/8	34.00	1 1/4	9
30	38.75	33.75	30.75	2.88	2.88	5.32	0.44	28	1 3/8	36.00	1 1/4	9 1/4
32	41.75	36.00	32.75	3.13	3.13	5.63	0.44	28	1 5/8	38.50	1 1/2	10 1/4
34	43.75	38.00	34.75	3.19	3.19	5.82	0.50	32	1 5/8	40.50	1 1/2	10 1/2
36	46.00	40.25	36.75	3.50	3.50	6.13	0.50	32	1 5/8	42.75	1 1/2	11
38	48.75	42.25	39.00	3.38	3.38	6.13	0.50	32	1 5/8	45.25	1 1/2	10 3/4
40	50.75	44.25	41.00	3.50	3.50	6.38	0.50	36	1 5/8	47.25	1 1/2	11
42	53.00	47.00	43.00	3.75	3.75	6.69	0.50	36	1 5/8	49.50	1 1/2	11 1/2
44	55.25	49.00	45.00	3.94	3.94	6.94	0.50	40	1 5/8	51.75	1 1/2	12
46	57.25	51.00	47.12	4.00	4.00	7.25	0.50	40	1 5/8	53.75	1 1/2	12
48	59.50	53.50	49.12	4.19	4.19	7.50	0.50	44	1 5/8	56.00	1 1/2	12 1/2
50	61.75	55.50	51.25	4.32	4.32	7.94	0.50	44	1 7/8	58.25	1 3/4	13 1/4
52	64.00	57.50	53.25	4.50	4.50	8.19	0.50	44	1 7/8	60.50	1 3/4	13 1/2
54	66.25	59.50	55.25	4.69	4.69	8.44	0.50	44	1 7/8	62.75	1 3/4	14
56	68.75	62.00	57.38	4.82	4.82	8.94	0.50	48	1 7/8	65.00	1 3/4	14 1/4
58	71.00	64.00	59.38	5.00	5.00	9.19	0.50	48	1 7/8	67.25	1 3/4	14 1/2
60	73.00	66.00	61.38	5.13	5.13	9.38	0.50	52	1 7/8	69.25	1 3/4	14 3/4

300# SERIES A FLANGE												
NOM. PIPE SIZE	O.D.	R.F.	HUB	FLG THK. T_1	BLIND FLANGE THK. T_2	Y	R	BOLTING				
								NUMBER OF HOLES	SIZE OF HOLES	BOLT CIRCLE	BOLT SIZE	STUD LENGTH
26	38.25	29.50	28.38	3.07	3.25	7.19	0.38	28	1 3/4	34.50	1 5/8	10 1/2
28	40.75	31.50	30.50	3.32	3.50	7.69	0.44	28	1 3/4	37.00	1 5/8	11
30	43.00	33.75	32.56	3.57	3.69	8.19	0.44	28	1 7/8	39.25	1 3/4	11 3/4
32	45.25	36.00	34.69	3.82	3.88	8.69	0.44	28	2	41.50	1 7/8	12 1/2
34	47.50	38.00	36.88	3.94	4.07	9.07	0.50	28	2	43.50	1 7/8	12 3/4
36	50.00	40.25	39.00	4.07	4.32	9.44	0.50	32	2 1/8	46.00	2	13 1/4
38	46.00	40.50	39.12	4.19	4.19	7.06	0.50	32	1 5/8	43.00	1 1/2	12 1/2
40	48.75	42.75	41.25	4.44	4.44	7.56	0.50	32	1 3/4	45.50	1 5/8	13 1/4
42	50.75	44.75	43.25	4.63	4.63	7.82	0.50	32	1 3/4	47.50	1 5/8	13 1/2
44	53.25	47.00	45.25	4.82	4.82	8.06	0.50	32	1 7/8	49.75	1 3/4	14 1/4
46	55.75	49.00	47.38	5.00	5.00	8.44	0.50	28	2	52.00	1 7/8	14 3/4
48	57.75	51.25	49.38	5.19	5.19	8.75	0.50	32	2	54.00	1 7/8	15 1/4
50	60.25	53.50	51.38	5.44	5.44	9.07	0.50	32	2 1/8	56.25	2	16
52	62.25	55.50	53.38	5.63	5.63	9.32	0.50	32	2 1/8	58.25	2	16 1/4
54	65.25	57.75	55.50	5.94	5.94	9.88	0.50	28	2 3/8	61.00	2 1/4	17 1/2
56	67.25	59.75	57.62	6.00	6.00	10.19	0.50	28	2 3/8	63.00	2 1/4	17 1/2
58	69.25	62.00	59.62	6.19	6.19	10.44	0.50	32	2 3/8	65.00	2 1/4	18
60	71.25	64.00	61.62	6.38	6.38	10.69	0.50	32	2 3/8	67.00	2 1/4	18 1/4

Notes:

1. Use of a raised face is optional, standard height is 1/16".
2. Bore to be specified by purchaser.
3. Stud length based upon using standard raised face with mating flange and 1/8" thick gasket.

©Tubular Exchanger Manufacturers Association, Inc.

TABLE D-3 (continued)
DIMENSIONS OF FLANGES – Part 3B

LARGE FLANGE

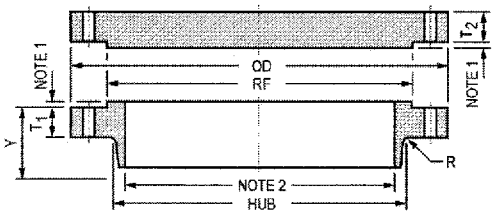

400# SERIES A FLANGE												
NOM. PIPE SIZE	O.D.	R.F.	HUB	FLG THK. T_1	BLIND FLANGE THK. T_2	Y	R	BOLTING				
								NUMBER OF HOLES	SIZE OF HOLES	BOLT CIRCLE	BOLT SIZE	STUD LENGTH
26	38.25	29.50	28.62	3.50	3.88	7.62	0.44	28	1 7/8	34.50	1 3/4	11 1/2
28	40.75	31.50	30.81	3.75	4.12	8.12	0.50	28	2	37.00	1 7/8	12 1/4
30	43.00	33.75	32.94	4.00	4.38	8.62	0.50	28	2 1/8	39.25	2	13
32	45.25	36.00	35.00	4.25	4.56	9.12	0.50	28	2 1/8	41.50	2	13 1/2
34	47.50	38.00	37.19	4.38	4.81	9.50	0.56	28	2 1/8	43.50	2	13 3/4
36	50.00	40.25	39.38	4.50	5.06	9.88	0.56	32	2 1/8	46.00	2	14
38	47.50	40.75	39.50	4.88	4.88	8.12	0.56	32	1 7/8	44.00	1 3/4	14 1/4
40	50.00	43.00	41.50	5.12	5.12	8.50	0.56	32	2	46.25	1 7/8	15
42	52.00	45.00	43.62	5.25	5.25	8.81	0.56	32	2	48.25	1 7/8	15 1/4
44	54.50	47.25	45.62	5.50	5.50	9.18	0.56	32	2 1/8	50.50	2	16
46	56.75	49.50	47.75	5.75	5.75	9.62	0.56	36	2 1/8	52.75	2	16 1/2
48	59.50	51.50	49.88	6.00	6.00	10.12	0.56	28	2 3/8	55.25	2 1/4	17 1/2
50	61.75	53.62	52.00	6.19	6.25	10.56	0.56	32	2 3/8	57.50	2 1/4	18
52	63.75	55.62	54.00	6.38	6.44	10.88	0.56	32	2 3/8	59.50	2 1/4	18 1/4
54	67.00	57.88	56.12	6.69	6.75	11.38	0.56	28	2 5/8	62.25	2 1/2	19 1/2
56	69.00	60.12	58.25	6.88	6.94	11.75	0.56	32	2 5/8	64.25	2 1/2	19 3/4
58	71.00	62.12	60.25	7.00	7.12	12.06	0.56	32	2 5/8	66.25	2 1/2	20
60	74.25	64.38	62.38	7.31	7.44	12.56	0.56	32	2 7/8	69.00	2 3/4	21

600# SERIES A FLANGE												
NOM. PIPE SIZE	O.D.	R.F.	HUB	FLG THK. T_1	BLIND FLANGE THK. T_2	Y	R	BOLTING				
								NUMBER OF HOLES	SIZE OF HOLES	BOLT CIRCLE	BOLT SIZE	STUD LENGTH
26	40.00	29.50	29.44	4.25	4.94	8.75	0.50	28	2	36.00	1 7/8	13 3/4
28	42.25	31.50	31.62	4.38	5.19	9.25	0.50	28	2 1/8	38.00	2	14 1/4
30	44.50	33.75	33.94	4.50	5.50	9.75	0.50	28	2 1/8	40.25	2	14 1/2
32	47.00	36.00	36.12	4.62	5.81	10.25	0.50	28	2 3/8	42.50	2 1/4	15 1/4
34	49.00	38.00	38.31	4.75	6.06	10.62	0.56	28	2 3/8	44.50	2 1/4	15 1/2
36	51.75	40.25	40.62	4.88	6.38	11.12	0.56	28	2 5/8	47.00	2 1/2	16 1/4
38	50.00	41.50	40.25	6.00	6.12	10.00	0.56	28	2 3/8	45.75	2 1/4	18
40	52.00	43.75	42.25	6.25	6.38	10.38	0.56	32	2 3/8	47.75	2 1/4	18 1/2
42	55.25	46.00	44.38	6.62	6.75	11.00	0.56	28	2 5/8	50.50	2 1/2	19 3/4
44	57.25	48.25	46.50	6.81	7.00	11.38	0.56	32	2 5/8	52.50	2 1/2	20
46	59.50	50.25	48.62	7.06	7.31	11.81	0.56	32	2 5/8	54.75	2 1/2	20 1/2
48	62.75	52.50	50.75	7.44	7.69	12.44	0.56	32	2 7/8	57.50	2 3/4	22
50	65.75	54.50	52.88	7.75	8.00	12.94	0.56	28	3 1/8	60.00	3	23
52	67.75	56.50	54.88	8.00	8.25	13.25	0.56	32	3 1/8	62.00	3	23 1/2
54	70.00	58.75	57.00	8.25	8.56	13.75	0.56	32	3 1/8	64.25	3	24
56	73.00	60.75	59.12	8.56	8.88	14.25	0.62	32	3 3/8	66.75	3 1/4	25
58	75.00	63.00	61.12	8.75	9.12	14.56	0.62	32	3 3/8	68.75	3 1/4	25 1/2
60	78.50	65.25	63.38	9.19	9.56	15.31	0.69	28	3 5/8	71.75	3 1/2	27

Notes:

1. Use of a raised face is optional, standard height is 1/4".
2. Bore to be specified by purchaser.
3. Stud length based upon using standard raised face with mating flange and 1/8" thick gasket.

©Tubular Exchanger Manufacturers Association, Inc.

TABLE D-3 (continued)
DIMENSIONS OF FLANGES – Part 3C

LARGE FLANGE

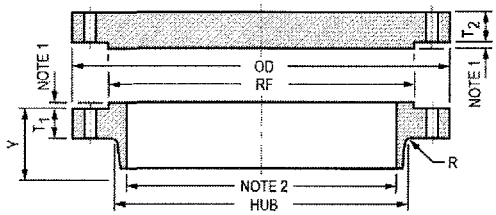

900# SERIES A FLANGE												
NOM. PIPE SIZE	O.D.	R.F.	HUB	FLG THK. T_1	BLIND FLANGE THK. T_2	Y	R	BOLTING				
								NUMBER OF HOLES	SIZE OF HOLES	BOLT CIRCLE	BOLT SIZE	STUD LENGTH
26	42.75	29.50	30.50	5.50	6.31	11.25	0.44	20	2 7/8	37.50	2 3/4	18
28	46.00	31.50	32.75	5.62	6.75	11.75	0.50	20	3 1/8	40.25	3	18 3/4
30	48.50	33.75	35.00	5.88	7.18	12.25	0.50	20	3 1/8	42.75	3	19 1/4
32	51.75	36.00	37.25	6.25	7.62	13.00	0.50	20	3 3/8	45.50	3 1/4	20 1/2
34	55.00	38.00	39.62	6.50	8.06	13.75	0.56	20	3 5/8	48.25	3 1/2	21 1/2
36	57.50	40.25	41.88	6.75	8.44	14.25	0.56	20	3 5/8	50.75	3 1/2	22
38	57.50	43.25	42.25	7.50	8.50	13.88	0.75	20	3 5/8	50.75	3 1/2	23 1/2
40	59.50	45.75	44.38	7.75	8.81	14.31	0.81	24	3 5/8	52.75	3 1/2	24
42	61.50	47.75	46.31	8.12	9.12	14.62	0.81	24	3 5/8	54.75	3 1/2	24 3/4
44	64.88	50.00	48.62	8.44	9.56	15.38	0.88	24	3 7/8	57.62	3 3/4	26
46	68.25	52.50	50.88	8.88	10.06	16.18	0.88	24	4 1/8	60.50	4	27 1/4
48	70.25	54.50	52.88	9.19	10.38	16.50	0.94	24	4 1/8	62.50	4	28

75# SERIES B FLANGE												
NOM. PIPE SIZE	O.D.	R.F.	HUB	FLG THK. T_1	BLIND FLANGE THK. T_2	Y	R	BOLTING				
								NUMBER OF HOLES	SIZE OF HOLES	BOLT CIRCLE	BOLT SIZE	STUD LENGTH
26	30.00	27.75	26.62	1.25	1.25	2.25	0.31	36	3/4	28.50	5/8	4 3/4
28	32.00	29.75	28.62	1.25	1.25	2.38	0.31	40	3/4	30.50	5/8	4 3/4
30	34.00	31.75	30.62	1.25	1.25	2.50	0.31	44	3/4	32.50	5/8	4 3/4
32	36.00	33.75	32.62	1.32	1.38	2.69	0.31	48	3/4	34.50	5/8	5
34	38.00	35.75	34.62	1.32	1.44	2.82	0.31	52	3/4	36.50	5/8	5
36	40.69	38.00	36.81	1.38	1.61	3.32	0.38	40	7/8	39.06	3/4	5 1/4
38	42.69	40.00	38.81	1.44	1.69	3.44	0.38	40	7/8	41.06	3/4	5 1/2
40	44.69	42.00	40.81	1.44	1.69	3.57	0.38	44	7/8	43.06	3/4	5 1/2
42	46.69	44.00	42.81	1.50	1.82	3.69	0.38	48	7/8	45.06	3/4	5 1/2
44	49.25	46.25	44.88	1.63	1.88	4.07	0.38	36	1	47.38	7/8	6
46	51.25	48.25	46.88	1.69	1.94	4.19	0.38	40	1	49.38	7/8	6 1/4
48	53.25	50.25	48.88	1.75	2.07	4.32	0.38	44	1	51.38	7/8	6 1/4
50	55.25	52.25	50.94	1.82	2.13	4.50	0.38	44	1	53.38	7/8	6 1/2
52	57.38	54.25	52.94	1.82	2.19	4.69	0.38	48	1	55.50	7/8	6 1/2
54	59.38	56.25	55.00	1.88	2.32	4.88	0.38	48	1	57.50	7/8	6 1/2
56	62.00	58.50	57.12	1.94	2.38	5.25	0.44	40	1 1/8	59.88	1	7
58	64.00	60.50	59.12	2.00	2.44	5.38	0.44	44	1 1/8	61.88	1	7
60	66.00	62.50	61.12	2.13	2.57	5.63	0.44	44	1 1/8	63.88	1	7 1/4

Notes:

1. Use of a raised face is optional, standard height is 1/4".
2. Bore to be specified by purchaser.
3. Stud length based upon using standard raised face with mating flange and 1/8" thick gasket.

©Tubular Exchanger Manufacturers Association, Inc.

TABLE D-3 (continued)
DIMENSIONS OF FLANGES – Part 3D

LARGE FLANGE

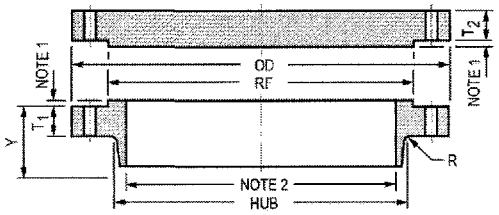

150# SERIES B FLANGE												
NOM. PIPE SIZE	O.D.	R.F.	HUB	FLG THK. T_1	BLIND FLANGE THK. T_2	Y	R	BOLTING				
								NUMBER OF HOLES	SIZE OF HOLES	BOLT CIRCLE	BOLT SIZE	STUD LENGTH
26	30.94	28.00	26.94	1.57	1.69	3.44	0.38	36	7/8	29.31	3/4	5 3/4
28	32.94	30.00	28.94	1.69	1.82	3.69	0.38	40	7/8	31.31	3/4	6
30	34.94	32.00	31.00	1.69	1.94	3.88	0.38	44	7/8	33.31	3/4	6
32	37.06	34.00	33.06	1.75	2.07	4.19	0.38	48	7/8	35.44	3/4	6
34	39.56	36.25	35.12	1.88	2.19	4.28	0.38	40	1	37.69	7/8	6 1/2
36	41.62	38.25	37.19	2.00	2.25	4.57	0.38	44	1	39.75	7/8	6 3/4
38	44.25	40.25	39.25	2.07	2.44	4.82	0.38	40	1 1/8	42.12	1	7 1/4
40	46.25	42.50	41.31	2.13	2.57	5.00	0.38	44	1 1/8	44.12	1	7 1/4
42	48.25	44.50	43.38	2.25	2.63	5.19	0.44	48	1 1/8	46.12	1	7 1/2
44	50.25	46.50	45.38	2.32	2.75	5.32	0.44	52	1 1/8	48.12	1	7 3/4
46	52.81	48.62	47.44	2.38	2.88	5.63	0.44	40	1 1/4	50.56	1 1/8	8
48	54.81	50.75	48.50	2.50	3.00	5.82	0.44	44	1 1/4	52.56	1 1/8	8 1/4
50	56.81	52.75	51.50	2.63	3.13	6.00	0.44	48	1 1/4	54.56	1 1/8	8 1/2
52	58.81	54.75	53.56	2.69	3.25	6.13	0.44	52	1 1/4	56.56	1 1/8	8 3/4
54	61.00	56.75	55.62	2.75	3.38	6.32	0.44	56	1 1/4	58.75	1 1/8	8 3/4
56	63.00	58.75	57.69	2.82	3.50	6.50	0.56	60	1 1/4	60.75	1 1/8	9
58	65.94	60.75	59.69	2.88	3.62	6.82	0.56	48	1 3/8	63.44	1 1/4	9 1/4
60	67.94	63.00	61.81	2.94	3.75	7.00	0.56	52	1 3/8	65.44	1 1/4	9 1/2

300# SERIES B FLANGE												
NOM. PIPE SIZE	O.D.	R.F.	HUB	FLG THK. T_1	BLIND FLANGE THK. T_2	Y	R	BOLTING				
								NUMBER OF HOLES	SIZE OF HOLES	BOLT CIRCLE	BOLT SIZE	STUD LENGTH
26	34.12	29.00	27.62	3.44	3.44	5.63	0.56	32	1 3/8	31.62	1 1/4	10 1/2
28	36.25	31.00	29.75	3.44	3.44	5.81	0.56	36	1 3/8	33.75	1 1/4	10 1/2
30	39.00	33.25	32.00	3.63	3.63	6.16	0.56	36	1 1/2	36.25	1 3/8	11
32	41.50	35.50	34.00	4.00	4.00	6.56	0.62	32	1 5/8	38.50	1 1/2	12
34	43.62	37.50	36.12	4.00	4.00	6.75	0.62	36	1 5/8	40.62	1 1/2	12
36	46.12	39.75	38.00	4.00	4.00	7.06	0.62	32	1 3/4	42.88	1 5/8	12 1/4
38	48.12	41.75	40.00	4.31	4.31	7.50	0.62	36	1 3/4	44.88	1 5/8	12 3/4
40	50.12	43.88	42.00	4.50	4.50	7.75	0.62	40	1 3/4	46.88	1 5/8	13 1/4
42	52.50	46.00	44.00	4.63	4.63	8.00	0.62	36	1 7/8	49.00	1 3/4	13 3/4
44	54.50	48.00	46.19	4.94	4.94	8.38	0.62	40	1 7/8	51.00	1 3/4	14 1/2
46	57.50	50.00	48.38	5.00	5.06	8.69	0.62	36	2	53.75	1 7/8	14 3/4
48	59.50	52.25	50.31	5.00	5.25	8.75	0.62	40	2	55.75	1 7/8	14 3/4
50	61.50	54.25	52.38	5.38	5.44	9.19	0.62	44	2	57.75	1 7/8	15 1/2
52	63.50	56.25	54.44	5.56	5.61	9.50	0.62	48	2	59.75	1 7/8	15 3/4
54	65.88	58.25	56.50	5.32	5.81	9.38	0.62	48	2	62.12	1 7/8	15 1/2
56	69.50	60.50	58.81	6.00	6.12	10.50	0.69	36	2 3/8	65.00	2 1/4	17 1/2
58	71.94	62.75	60.94	6.00	6.31	10.75	0.69	40	2 3/8	67.44	2 1/4	17 1/2
60	73.94	65.00	62.94	5.88	6.50	10.63	0.69	40	2 3/8	69.44	2 1/4	17 1/4

Notes:

1. Use of a raised face is optional, standard height is 1/16".
2. Bore to be specified by purchaser.
3. Stud length based upon using standard raised face with mating flange and 1/8" thick gasket.

©Tubular Exchanger Manufacturers Association, Inc.

TABLE D-3 (continued)
DIMENSIONS OF FLANGES – Part 3E

LARGE FLANGE

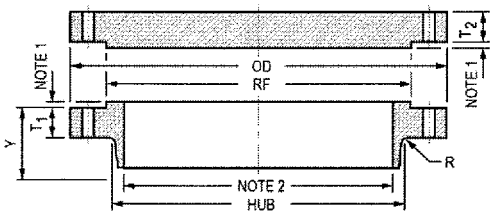

400# SERIES B FLANGE												
NOM. PIPE SIZE	O.D.	R.F.	HUB	FLG THK. T_1	BLIND FLANGE THK. T_2	Y	R	BOLTING				
								NUMBER OF HOLES	SIZE OF HOLES	BOLT CIRCLE	BOLT SIZE	STUD LENGTH
26	33.50	28.00	27.12	3.50	3.50	5.88	0.44	28	1 1/2	30.75	1 3/8	10 3/4
28	36.00	30.00	29.12	3.75	3.75	6.25	0.50	24	1 5/8	33.00	1 1/2	11 1/2
30	38.25	32.25	31.25	4.00	4.00	6.69	0.50	28	1 5/8	35.25	1 1/2	12
32	40.75	34.38	33.25	4.25	4.25	7.06	0.50	28	1 3/4	37.50	1 5/8	12 3/4
34	42.75	36.50	35.38	4.38	4.38	7.38	0.56	32	1 3/4	39.50	1 5/8	13
36	45.50	38.62	37.50	4.69	4.69	7.88	0.56	28	1 7/8	42.00	1 3/4	14

600# SERIES B FLANGE												
NOM. PIPE SIZE	O.D.	R.F.	HUB	FLG THK. T_1	BLIND FLANGE THK. T_2	Y	R	BOLTING				
								NUMBER OF HOLES	SIZE OF HOLES	BOLT CIRCLE	BOLT SIZE	STUD LENGTH
26	35.00	28.62	27.50	4.38	4.38	7.12	0.50	28	1 3/4	31.75	1 5/8	13 1/2
28	37.50	30.88	29.62	4.56	4.56	7.50	0.50	28	1 7/8	34.00	1 3/4	14
30	40.25	33.12	31.75	4.94	5.00	8.06	0.50	28	2	36.50	1 7/8	15 1/4
32	42.75	35.25	33.88	5.12	5.31	8.50	0.50	28	2 1/8	38.75	2	15 3/4
34	45.75	37.50	36.00	5.56	5.68	9.19	0.56	24	2 3/8	41.50	2 1/4	17
36	47.75	39.75	38.12	5.75	5.94	9.56	0.56	28	2 3/8	43.50	2 1/4	17 1/2

900# SERIES B FLANGE												
NOM. PIPE SIZE	O.D.	R.F.	HUB	FLG THK. T_1	BLIND FLANGE THK. T_2	Y	R	BOLTING				
								NUMBER OF HOLES	SIZE OF HOLES	BOLT CIRCLE	BOLT SIZE	STUD LENGTH
26	40.25	30.00	29.25	5.31	6.06	10.19	0.44	20	2 5/8	35.50	2 1/2	17
28	43.50	32.25	31.38	5.81	6.56	10.88	0.50	20	2 7/8	38.25	2 3/4	18 1/2
30	46.50	34.50	33.50	6.12	6.93	11.38	0.50	20	3 1/8	40.75	3	19 3/4
32	48.75	36.50	35.75	6.31	7.31	11.94	0.50	20	3 1/8	43.00	3	20
34	51.75	39.00	37.88	6.75	7.68	12.56	0.56	20	3 3/8	45.50	3 1/4	21 1/2
36	53.00	40.50	40.00	6.81	7.94	12.81	0.56	24	3 1/8	47.25	3	21

Notes:

1. Use of a raised face is optional, standard height is 1/4".
2. Bore to be specified by purchaser.
3. Stud length based upon using standard raised face with mating flange and 1/8" thick gasket.

©Tubular Exchanger Manufacturers Association, Inc.

TABLE D-3 (continued)
DIMENSIONS OF FLANGES – Part 4A

SLIP-ON FLANGE

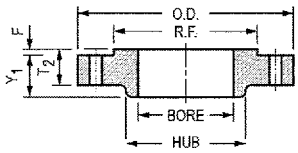

PLATE FLANGE

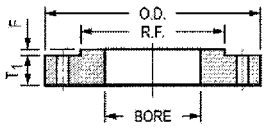

WELD NECK FLANGE

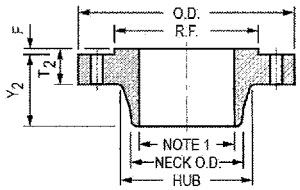

BLIND FLANGE

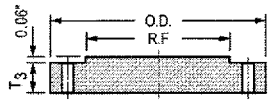

PN6														
							FLANGE THICKNESS					BOLTING		
DN	O.D	R.F	SO HUB	WN HUB	BORE	NECK O.D.	T_1	T_2	T_3	SLIP ON Y_1	WELD NECK Y_2	NUMBER OF HOLES	SIZE OF HOLE	BOLT CIRCLE
10	75	35	25	26	18.0	17.2	12	12	12	20	28	4	11	50
15	80	40	30	30	22.0	21.3	12	12	12	20	30	4	11	55
20	90	50	40	38	27.5	26.9	14	14	14	24	32	4	11	65
25	100	60	50	42	34.5	33.7	14	14	14	24	35	4	11	75
32	120	70	60	55	43.5	42.4	16	14	14	26	35	4	14	90
40	130	80	70	62	49.5	48.3	16	14	14	26	38	4	14	100
50	140	90	80	74	61.5	60.3	16	14	14	28	38	4	14	110
65	160	110	100	88	77.5	76.1	16	14	14	32	38	4	14	130
80	190	128	110	102	90.5	88.9	18	16	16	34	42	4	18	150
100	210	148	130	130	116.0	114.3	18	16	16	40	45	4	18	170
125	240	178	160	155	141.5	139.7	20	18	18	44	48	8	18	200
150	265	202	185	184	170.5	168.3	20	18	18	44	48	8	18	225
200	320	258	240	236	221.5	219.1	22	20	20	44	55	8	18	280
250	375	312	295	290	276.5	273.0	24	22	22	44	60	12	18	335
300	440	365	355	342	327.5	323.9	24	22	22	44	62	12	22	395
350	490	415	-	385	359.5	355.6	26	22	22	-	62	12	22	445
400	540	465	-	438	411.0	406.4	28	22	22	-	65	16	22	495
450	595	520	-	492	462.0	457.0	30	22	24	-	65	16	22	550
500	645	570	-	538	513.5	508.0	30	24	24	-	68	20	22	600
600	755	670	-	640	616.5	610.0	32	30	30	-	70	20	26	705

PN10														
							FLANGE THICKNESS					BOLTING		
DN	O.D	R.F	SO HUB	WN HUB	BORE	NECK O.D.	T_1	T_2	T_3	SLIP ON Y_1	WELD NECK Y_2	NUMBER OF HOLES	SIZE OF HOLE	BOLT CIRCLE
10	90	40	30	28	18.0	17.2	14	16	16	22	35	4	14	60
15	95	45	35	32	22.0	21.3	14	16	16	22	38	4	14	65
20	105	58	45	40	27.5	26.9	16	18	18	26	40	4	14	75
25	115	68	52	46	34.5	33.7	16	18	18	28	40	4	14	85
32	140	78	60	56	43.5	42.4	18	18	18	30	42	4	18	100
40	150	88	70	64	49.5	48.3	18	18	18	32	45	4	18	110
50	165	102	84	74	61.5	60.3	20	18	18	28	45	4	18	125
65	185	122	104	92	77.5	76.1	20	18	18	32	45	8	18	145
80	200	138	118	105	90.5	88.9	20	20	20	34	50	8	18	160
100	220	158	140	131	116.0	114.3	22	20	20	40	52	8	18	180
125	250	188	168	156	141.5	139.7	22	22	22	44	55	8	18	210
150	285	212	195	184	170.5	168.3	24	22	22	44	55	8	22	240
200	340	268	246	234	221.5	219.1	24	24	24	44	62	8	22	295
250	395	320	298	292	276.5	273.0	26	26	26	46	68	12	22	350
300	445	370	350	342	327.5	323.9	26	26	26	46	68	12	22	400
350	505	430	400	385	359.5	355.6	30	26	26	53	68	16	22	460
400	565	482	456	440	411.0	406.4	32	26	26	57	72	16	26	515
450	615	532	502	488	462.0	457.0	36	28	28	63	72	20	26	565
500	670	585	559	542	513.5	508.0	38	28	28	67	75	20	26	620
600	780	685	658	642	616.5	610.0	42	30	34	75	82	20	30	725

Notes 1. As required by adjoining pipe bore schedule.
2. Raised face thickness F = 2 for DN 10-32, 3 for DN 40-250, 4 for DN 300-500, and 5 for DN 600.
3. All dimensions are in mm.

©Tubular Exchanger Manufacturers Association, Inc.

TABLE D-3 (continued)
DIMENSIONS OF FLANGES – Part 4B

SLIP-ON FLANGE

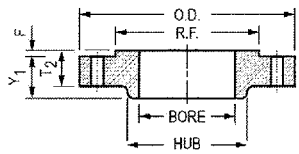

PLATE FLANGE

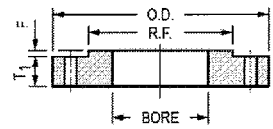

WELD NECK FLANGE

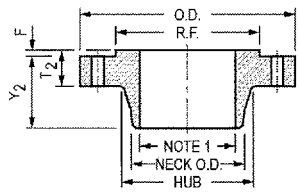

BLIND FLANGE

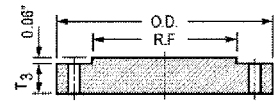

PN16														
							FLANGE THICKNESS					BOLTING		
DN	O.D	R.F	SO HUB	WN HUB	BORE	NECK O.D.	T_1	T_2	T_3	SLIP ON Y_1	WELD NECK Y_2	NUMBER OF HOLES	SIZE OF HOLE	BOLT CIRCLE
10	90	40	30	28	18.0	17.2	14	16	16	22	35	4	14	60
15	95	45	35	32	22.0	21.3	14	16	16	22	38	4	14	65
20	105	58	45	40	27.5	26.9	16	18	18	26	40	4	14	75
25	115	68	52	46	34.5	33.7	16	18	18	28	40	4	14	85
32	140	78	60	56	43.5	42.4	18	18	18	30	42	4	18	100
40	150	88	70	64	49.5	48.3	18	18	18	32	45	4	18	110
50	165	102	84	74	61.5	60.3	20	18	18	28	45	4	18	125
65	185	122	104	92	77.5	76.1	20	18	18	32	45	8	18	145
80	200	138	118	105	90.5	88.9	20	20	20	34	50	8	18	160
100	220	158	140	131	116.0	114.3	22	20	20	40	52	8	18	180
125	250	188	168	156	141.5	139.7	22	22	22	44	55	8	18	210
150	285	212	195	184	170.5	168.3	24	22	22	44	55	8	22	240
200	340	268	246	235	221.5	219.1	26	24	24	44	62	12	22	295
250	405	320	298	292	276.5	273.0	29	26	26	46	70	12	26	355
300	460	378	350	344	327.5	323.9	32	28	28	46	78	12	26	410
350	520	438	400	390	359.5	355.6	35	30	30	57	82	16	26	470
400	580	490	456	445	411.0	406.4	38	32	32	63	85	16	30	525
450	640	550	502	490	462.0	457.0	42	34	40	68	83	20	30	585
500	715	610	559	548	513.5	508.0	46	36	44	73	84	20	33	650
600	840	725	658	670	616.5	610.0	55	40	54	83	88	20	36	770

PN25														
							FLANGE THICKNESS					BOLTING		
DN	O.D	R.F	SO HUB	WN HUB	BORE	NECK O.D.	T_1	T_2	T_3	SLIP ON Y_1	WELD NECK Y_2	NUMBER OF HOLES	SIZE OF HOLE	BOLT CIRCLE
10	90	40	30	28	18.0	17.2	14	16	16	22	35	4	14	60
15	95	45	35	32	22.0	21.3	14	16	16	22	38	4	14	65
20	105	58	45	40	27.5	26.9	16	18	18	26	40	4	14	75
25	115	68	52	46	34.5	33.7	16	18	18	28	40	4	14	85
32	140	78	60	56	43.5	42.4	18	18	18	30	42	4	18	100
40	150	88	70	64	49.5	48.3	18	18	18	32	45	4	18	110
50	165	102	84	75	61.5	60.3	20	20	20	34	48	4	18	125
65	185	122	104	90	77.5	76.1	22	22	22	38	52	8	18	145
80	200	138	118	105	90.5	88.9	24	24	24	40	58	8	18	160
100	235	162	145	134	116.0	114.3	26	24	24	44	65	8	22	190
125	270	188	170	162	141.5	139.7	28	26	26	48	68	8	26	220
150	300	218	200	192	170.5	168.3	30	28	28	52	75	8	26	250
200	360	278	256	244	221.5	219.1	32	30	30	52	80	12	26	310
250	425	335	310	298	276.5	273.0	35	32	32	60	88	12	30	370
300	485	395	354	352	327.5	323.9	38	34	34	67	92	16	30	430
350	555	450	418	398	359.5	355.6	42	38	38	72	100	16	33	490
400	620	505	472	452	411.0	406.4	48	40	40	78	110	16	36	550
450	670	555	520	500	462.0	457.0	54	46	46	84	110	20	36	600
500	730	615	580	558	513.5	508.0	58	48	48	90	125	20	36	660
600	845	720	684	660	616.5	610.0	68	48	48	100	125	20	39	770

Notes 1. As required by adjoining pipe bore schedule.
2. Raised face thickness F = 2 for DN 10-32, 3 for DN 40-250, 4 for DN 300-500, and 5 for DN 600.
3. All dimensions are in mm.

©Tubular Exchanger Manufacturers Association, Inc.

TABLE D-3 (continued)
DIMENSIONS OF FLANGES – Part 4C

SLIP-ON FLANGE

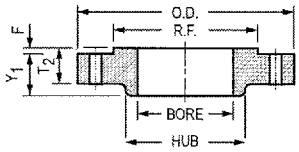

PLATE FLANGE

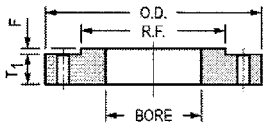

WELD NECK FLANGE

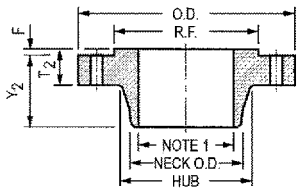

BLIND FLANGE

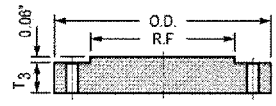

PN40														
							FLANGE THICKNESS					BOLTING		
DN	O.D	R.F	SO HUB	WN HUB	BORE	NECK O.D.	T_1	T_2	T_3	SLIP ON Y_1	WELD NECK Y_2	NUMBER OF HOLES	SIZE OF HOLE	BOLT CIRCLE
10	90	40	30	28	18.0	17.2	14	16	16	22	35	4	14	60
15	95	45	35	32	22.0	21.3	14	16	16	22	38	4	14	65
20	105	58	45	40	27.5	26.9	16	18	18	26	40	4	14	75
25	115	68	52	46	34.5	33.7	16	18	18	28	40	4	14	85
32	140	78	60	56	43.5	42.4	18	18	18	30	42	4	18	100
40	150	88	70	64	49.5	48.3	18	18	18	32	45	4	18	110
50	165	102	84	75	61.5	60.3	20	20	20	34	48	4	18	125
65	185	122	104	90	77.5	76.1	22	22	22	38	52	8	18	145
80	200	138	118	105	90.5	88.9	24	24	24	40	58	8	18	160
100	235	162	145	134	116.0	114.3	26	24	24	44	65	8	22	190
125	270	188	170	162	141.5	139.7	28	26	26	48	68	8	26	220
150	300	218	200	192	170.5	168.3	30	28	28	52	75	8	26	250
200	375	285	260	244	221.5	219.1	36	34	34	52	88	12	30	320
250	450	345	312	306	276.5	273.0	42	38	38	60	105	12	33	385
300	515	410	380	362	327.5	323.9	52	42	42	67	115	16	33	450
350	580	465	424	408	359.5	355.6	58	46	46	72	125	16	36	510
400	660	535	478	462	411.0	406.4	65	50	50	78	135	16	39	585
450	685	560	522	500	462.0	457.0	-	57	57	84	135	20	39	610
500	755	615	576	562	513.5	508.0	-	57	57	90	140	20	42	670
600	890	735	686	666	616.5	610.0	-	72	72	100	150	20	48	795

Notes 1. As required by adjoining pipe bore schedule.
2. Raised face thickness F = 2 for DN 10-32, 3 for DN 40-250, 4 for DN 300-500, and 5 for DN 600.
3. All dimensions are in mm.

©Tubular Exchanger Manufacturers Association, Inc.

TABLE D-3 (continued)
DIMENSIONS OF FLANGES – Part 5A

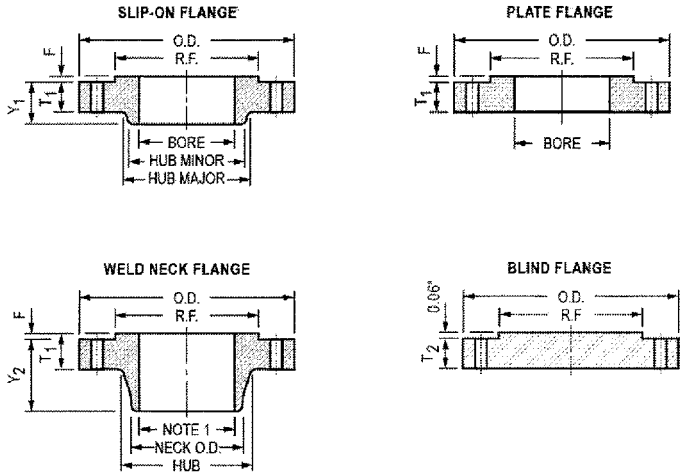

5K FLANGE														
								FLANGE THICKNESS				BOLTING		
NOMINAL SIZE	O.D	R.F	SO HUB OD	SO HUB ID	WN HUB	BORE	NECK O.D.	T_1	T_2	SLIP ON Y_1	WELD NECK Y_2	NUMBER OF HOLES	SIZE OF HOLE	BOLT CIRCLE
10	75	39	26	23	26	17.8	17.3	9	9	13	24	4	12	55
15	80	44	30	27	31	22.2	21.7	9	9	13	25	4	12	60
20	85	49	36	33	38	27.7	27.2	10	10	15	28	4	12	65
25	95	59	44	41	46	34.5	34.0	10	10	17	30	4	12	75
32	115	70	53	50	55	43.2	42.7	12	12	19	33	4	15	90
40	120	75	60	56	62	49.1	48.6	12	12	20	34	4	15	95
50	130	85	73	69	73	61.1	60.5	14	14	24	36	4	15	105
65	155	110	91	86	91	77.1	76.3	14	14	27	39	4	15	130
80	180	121	105	99	105	90.0	89.1	14	14	30	41	4	19	145
100	200	141	130	127	128	115.4	114.3	16	16	36	41	8	19	165
125	235	176	161	154	156	141.2	139.8	16	16	40	43	8	19	200
150	265	206	189	182	184	166.6	165.2	18	18	40	49	8	19	230
200	320	252	–	–	235	218.0	216.3	20	20	–	53	8	23	280
250	385	317	–	–	290	269.5	267.4	22	22	–	61	12	23	345
300	430	360	–	–	342	321.0	318.5	22	22	–	62	12	23	390
350	480	403	–	–	385	358.1	355.6	24	24	–	73	12	25	435
400	540	463	–	–	438	409.0	406.4	24	24	–	76	16	25	495
450	605	523	500	495	491	460.0	457.2	24	24	40	79	16	25	555
500	655	573	552	546	541	511.0	508.0	24	24	40	79	20	25	605
600	770	680	654	648	643	613.0	609.6	26	26	44	81	20	27	715

Notes 1. As required by adjoining pipe bore schedule.
2. Raised face thickness F = 1 for nom size 10-25, 2 for nom size 32-250, and 3 for nom size 300-600.
3. All dimensions are in mm.

©Tubular Exchanger Manufacturers Association, Inc.

TABLE D-3 (continued)
DIMENSIONS OF FLANGES – Part 5B

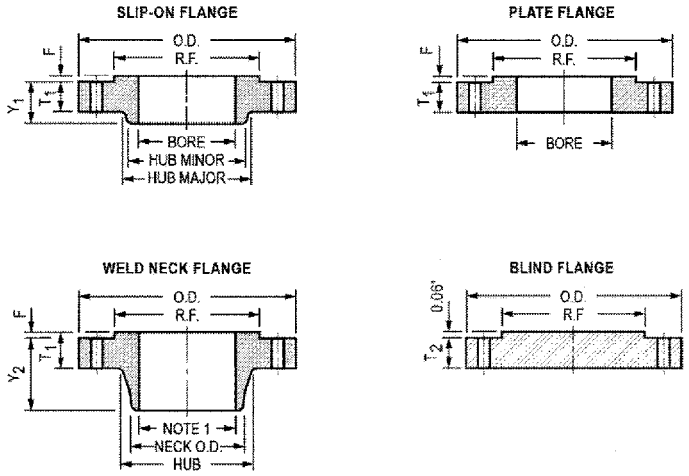

10K FLANGE														
NOMINAL SIZE	O.D	R.F	SO HUB OD	SO HUB ID	WN HUB	BORE	NECK O.D.	FLANGE THICKNESS		SLIP ON Y_1	WELD NECK Y_2	BOLTING		
								T_1	T_2			NUMBER OF HOLES	SIZE OF HOLE	BOLT CIRCLE
10	90	46	26	23	28	17.8	17.3	12	12	16	29	4	15	65
15	95	51	30	27	33	22.2	21.7	12	12	16	31	4	15	70
20	100	56	36	33	38	27.7	27.2	14	14	20	32	4	15	75
25	125	67	44	41	47	34.5	34.0	14	14	20	36	4	19	90
32	135	76	53	50	56	43.2	42.7	16	16	22	38	4	19	100
40	140	81	60	56	62	49.1	48.6	16	16	24	38	4	19	105
50	155	96	73	69	75	61.1	60.5	16	16	24	40	4	19	120
65	175	116	91	86	92	77.1	76.3	18	18	27	44	4	19	140
80	185	126	105	99	105	90.0	89.1	18	18	30	45	8	19	150
100	210	151	130	127	130	115.4	114.3	18	18	36	45	8	19	175
125	250	182	161	154	156	141.2	139.8	20	20	40	47	8	23	210
150	280	212	189	182	184	166.6	165.2	22	22	40	53	8	23	240
200	330	262	–	–	238	218.0	216.3	22	22	–	58	12	23	290
250	400	324	292	288	292	269.5	267.4	24	24	36	65	12	25	355
300	445	368	346	340	345	321.0	318.5	24	24	38	68	16	25	400
350	490	413	386	380	388	358.1	355.6	26	26	42	79	16	25	445
400	560	475	442	436	442	409.0	406.4	28	28	44	85	16	27	510
450	620	530	502	496	495	460.0	457.2	30	30	48	90	20	27	565
500	675	585	554	548	546	511.0	508.0	30	30	48	99	20	27	620
600	795	690	662	656	648	613.0	609.6	32	36	52	112	24	33	730

Notes 1. As required by adjoining pipe bore schedule.
2. Raised face thickness F = 1 for nom size 10-25, 2 for nom size 32-250, and 3 for nom size 300-600.
3. All dimensions are in mm.

 ©Tubular Exchanger Manufacturers Association, Inc.

TABLE D-3 (continued)
DIMENSIONS OF FLANGES – Part 5C

SLIP-ON FLANGE

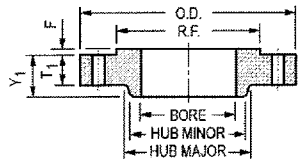

WELD NECK FLANGE

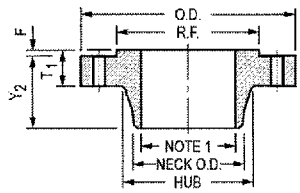

BLIND FLANGE

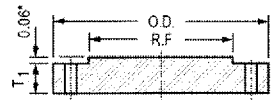

16K FLANGE													
											BOLTING		
NOMINAL SIZE	O.D	R.F	SO HUB OD	SO HUB ID	WN HUB	BORE	NECK O.D.	FLANGE THICK-NESS T1	SLIP ON Y_1	WELD NECK Y_2	NUMBER OF HOLES	SIZE OF HOLE	BOLT CIRCLE
10	90	46	28	26	29	17.8	17.3	12	16	31	4	15	65
15	95	51	32	30	34	22.2	21.7	12	16	32	4	15	70
20	100	56	42	38	39	27.7	27.2	14	20	34	4	15	75
25	125	67	50	46	47	34.5	34.0	14	20	36	4	19	90
32	135	76	60	56	56	43.2	42.7	16	22	39	4	19	100
40	140	81	66	62	62	49.1	48.6	16	24	39	4	19	105
50	155	96	80	76	75	61.1	60.5	16	24	40	8	19	120
65	175	116	98	94	92	77.1	76.3	18	26	46	8	19	140
80	200	132	112	108	105	90.0	89.1	20	28	49	8	23	160
100	225	160	138	134	134	115.4	114.3	22	34	56	8	23	185
125	270	195	170	165	162	141.2	139.8	22	34	60	8	25	225
150	305	230	202	196	192	166.6	165.2	24	38	69	12	25	260
200	350	275	252	244	244	218.0	216.3	26	40	73	12	25	305
250	430	345	312	304	298	269.5	267.4	28	44	81	12	27	380
300	480	395	364	354	352	321.0	318.5	30	48	88	16	27	430
350	540	440	408	398	398	358.1	355.6	34	52	104	16	33	480
400	605	495	456	446	452	409.0	406.4	38	60	115	16	33	540
450	675	560	514	504	510	460.0	457.2	40	64	126	20	33	605
500	730	615	568	558	561	511.0	508.0	42	68	128	20	33	660
600	845	720	676	666	670	613.0	609.6	46	74	141	24	39	770

Notes 1. As required by adjoining pipe bore schedule.
2. Raised face thickness F = 1 for nom size 10-25, 2 for nom size 32-250, and 3 for nom size 300-600.
3. All dimensions are in mm.

 ©Tubular Exchanger Manufacturers Association, Inc.

TABLE D-4

INTERNATIONAL MATERIAL SPECIFICATIONS

This table serves as a cross-reference of materials produced to common international material specifications. Material groupings are presented based on similarity of material chemistry and alloying elements. Information presented in this table shall not be considered as permissible allowable substitutions between materials listed. This table serves as a guideline only in locating similar materials for more detailed consideration. Responsibility in selection of material suitable for service lies with the Purchaser.

Some reference numbers in this table are obsolete but are included for reference.

Nominal Composition / EN / DIN Numerical Designator	USA ASME	UNS Number	U.K. BS	GERMANY DIN	JAPAN JIS	CHINA GB	EUROPE EN	FRANCE AFNOR	ITALY UNI
C Stl Plate EN/DIN 1.0425	SA-285-C	K02801	BS 1501 151-400 154-400 161-400 164-360 164-400	DIN 17155 H II	JIS G3103 SB42 JIS G 3115 SPV32; SPV 36 SPV235	GB 6654 20R	EN 10028 P235GH P265 GH	NFA36205 A42 CP, FP, FP	UNI 5869 Fe410-1 KW, KG UNI 7660 Fe410 KW, KG
C-Stl Plate EN/DIN 1.8907/1.8917/1.8937	SA-515-60	K02401	BS1501 151-360 161-400	DIN 17102 St E 500 DIN 17155 H11	JIS G3103 SB42	GB 6654 20R 16MnR		NFA35501 E24-2 NFA36204 E500 T	
C-Stl Plate EN/DIN 1.0435	SA-515-65	K02800	BS1501 151-430 154-430 161-430 223-460 223-490 225-460	DIN17155 H III 17Mn4	JIS G 3103 SB46; SB410 SB450 JIS G 3115 SPV235; SPV315 JIS G 3116 SG33; SG325	GB 6654 20R 16MnR		NFA36205 37 AP, CP 42 CP	UNI 5869 Fe360-1 KW, KG Fe360-2 KW, 2KG
C Stl Plate EN/DIN 1.0445/1.0481/1.0482	SA-515-70	K03101	BS1501 223-490B 224-460 224-490 224-490B 225-490	DIN 17155 17 Mn 4 19 Mn 5	JIS G 3103 SB49 SB480 JIS G 3115 SPV 315 JIS G 3116 SG 37 SG 365	GB 6654 16MnR	EN 10028 P295 GH P355NL1	NFA 36205 A48 AP, CP, FB NFA 36201 A48CP	UNI 5869 FE460-1 KG, KW FE510-1 KG, KW FE510-2 KG, KW UNI 7660 FE460-1 KG, KT, KW FE460-2 KG, KT, KW FE510-1 KG, KT, KW FE510-2 KG, KT, KW

©Tubular Exchanger Manufacturers Association, Inc.

TABLE D-4 (continued)

INTERNATIONAL MATERIAL SPECIFICATIONS

Nominal Composition EN / DIN Numerical Designator	USA ASME	UNS Number	U.K. BS	GERMANY DIN	JAPAN JIS	CHINA GB	EUROPE EN	FRANCE AFNOR	ITALY UNI
C Stl Plate EN/DIN 1.0426/1.0437/1.0486 1.0487/1.0488	SA-516-60	K02100	BS1501 224-400 A/B 224-430 A/B	DIN 17102 T St E 285 W St E 285 T St E 315 SEW 089 Wst E26 Wst E29	JIS G3115 SPV24 JIS G 3126 SLA 24 SLA-235B SLA-325A	GB 6654 16MnR 16MnDR	EN 10028/3 P275N P275NH P275NL	NFA 36205 A37 FP A42-FP	
C Stl Plate EN/DIN 1.0436 1.0505/1.0506/1.0508	SA-516-65	K02403	BS1501 161-360 161-400 164-360 224-460 A/B	DIN 17102 T St E 355 St E 315 W St E 315 T St E 315 SEW 089 Wst E32	JIS G3118 SPV 46 SGV 450 JIS G3126 SLA 33	GB 6654 16MnR 16MnDR		NFA 36205 A37 CP AP A48 FP	UNI 5869 FE360-1 KG, KW FE360-2 KG, KW
C Stl Plate EN/DIN 1.0562/1.0565/1.0566 1.0473/1.0482/1.0485	SA-516-70	K02700	BS1501 224-460 224-490 A/B	DIN 17155 17 Mn 4 19 Mn 5 19 Mn 6 SEW 089 Wst E32	JIS G 3115 SPV 32 JIS G 3118 SGV42; SGV46 SGV49; SGV410 SGV450; SGV480	GB 6654 16MnR	EN 10028/2 P295GH P355 GH	NFA 36205 A48 CP,AP A52 CP, AP, FP NFA 36207 A50Pb A510 AP, FP A530 AP, FP	UNI 5869 FE460-1 KG, KW FE460-2 KG, KW FE510-1 KG, KW FE510-2 KG, KW
C Stl Plate EN/DIN 1.0583/1.0584/1.0589 1.0473/1.0482/1.0485 1.8902/1.8912/1.8932	SA-537	K12437	BS1501 224-460 224-490 A/B	DIN 17155 19 Mn 6 DIN17102 T St E 380 DIN 17103 P420NH	JIS G 3115 SPV 32 SPV 46 SPV 235 SPV 315 SPV 355	GB 6654 16MnR	EN 10028/2 P295GH P335GH EN 10028/6 P355Q, QH QL	NFA 36205 A52 CP, CPR A52 AP, APR	UNI 5869 FE510-1 KG, KW FE510-2 KG, KW

©Tubular Exchanger Manufacturers Association, Inc.

TABLE D-4 (continued)

INTERNATIONAL MATERIAL SPECIFICATIONS

Nominal Composition / EN / DIN Numerical Designator	USA ASME	UNS Number	U.K. BS	GERMANY DIN	JAPAN JIS	CHINA GB	EUROPE EN	FRANCE AFNOR	ITALY UNI
C Stl Forging EN/DIN 1.0432	SA-105	K03504	BS 1503 221-410 221-460 221-490	DIN 17243 17 Mn 4 DIN 2528 C21 St52.3	JIS G 3201 SF45; SF50 JIS G 3202 SFVC 2 A JIS G 40511 S 25 C; S 30 C		EN 10222 P280GH P355N,QH S235 EN 10250 S355J2G3	NFE 29-204 BF48N NFA 36-612 F42	UNI 7746 FE 490
C-Stl Forging	SA-266-2	K03506		DIN 2528 C21 DIN 17100 USt 37-3; USt 42-3	JIS G 3106 SM 41 B JIS G 3202 SFVC 2 A	JB 755 20 16Mn		NFA 36-612 F42	UNI 7746 FE 410 B,C,D
C-Stl Forging	SA-266-4	K03017	BS 1503 221-530	DIN 2528 C21	JIS G 3202 SFVC 2 B JIS G 3205 SFL 1,2	JB 755 20 16Mn	EN 10222 P305GH	NFA 36-612 F48	UNI 7746 FE 410 B,C,D
C-Stl Forging	SA-350-LF2	K03011	BS 1503 223-410 223-490 224-410, 430	TTSt41	JIS G 3203 SFVA F1 JIS G 3205 SFL 1,2	JB 755 16Mn 16MnD	EN 10222 P280GH P355N,QH	NFA 36-612 F42 F48	UNI 7746 FE 360 B,C,D
C-Stl Forging	SA-765-2	K03047	BS 1503 221-410; 221-430 221-460; 221-530 221-550 224-460		JIS G 3204 SFVQ 1,2			NFA 36-601 A48 CP,AP,FP NFA 36-602 15 D 3	
C Stl Pipe EN/DIN 1.0405/1.0418	SA-106-B	K03006	BS 2602 27 BS 3602 HFS 27; HFS 430	DIN 17175 St 45.8 I, III DIN 1629 T.1 St 45.4	JIS G 3455 STS 42; STS 410 JIS G3456 STPT 410	20		NFA 49-211 TU E250 NFA49-213 TU42C	

©Tubular Exchanger Manufacturers Association, Inc.

TABLE D-4 (continued)

INTERNATIONAL MATERIAL SPECIFICATIONS

Nominal Composition / EN / DIN Numerical Designator	USA ASME	UNS Number	U.K. BS	GERMANY DIN	JAPAN JIS	CHINA GB	EUROPE EN	FRANCE AFNOR	ITALY UNI
C Stl Pipe EN/DIN 1.0481	SA-106-C	K03501	BS 3602 HFS 35	DIN 1629 St 52.4 DIN 17175 17 Mn 4 SEW 610 17Mn4; 19Mn5	JIS G 3455 STS 49 JIS G 3456 STPT 49-S				
C Stl Pipe EN/DIN 1.0405/1.0418	SA-333-6	K03006	BS3603 HFS 430 LT	SEW 680 TTSt 35N	JIS G 3460 SPLT 39-2,-E STPL 380	16 Mn		NFA 49-230 TU 42 BT	
C-Stl Wld Tube EN/DIN 1.0405/1.0418	SA-334-6	K03006	BS 3603 CFS 430 LT	DIN 17173 TT St 35 N DIN 17175 St 45.8	JIS G 3464 STBL 39-S STBL 380 C	16 Mn 09MnD		NFA 49-215 TU 42 BT	UNI 5462 C 18 UNI 5949 C 20
C-Stl Wld Tube	SA-214	K01807	BS 3606 ERW 320	DIN 17177 St 37.8 DIN 2392 St34.2 GBK	JIS G 3461 STB 33 EC STB340 ERW	10 20		NFA 49-142 TS E185A	
C Stl Smls Tube EN/DIN 1.0305	SA-179	K01200	BS 3059 320 BS 3606 CFS 320	DIN 17175 St 35.8 DIN 2391 St 35 GBK	JIS G 3451 STB 33-SC JIS G 3461 STB 340 SML	GB 8163 10 20		NFA 49-215 TU 37-C	UNI 5462 C 14
C Stl Smls Tube EN/DIN 1.0305	SA-192	K01201	BS 3059 360 BS 3602 CEW430 BS 3606 245	DIN 1628 St35.4 DIN 1629 St85 DIN 17175 St 35.6; St 35.8	JIS G 3461 STB 33 SH STB 35 SC,SH STB 340 SML STB 410	GB 5310 20G		NFA 49-215 TU 37-C TU42C	UNI 5462 C 14

©Tubular Exchanger Manufacturers Association, Inc.

TABLE D-4 (continued)

INTERNATIONAL MATERIAL SPECIFICATIONS

Nominal Composition EN / DIN Numerical Designator	USA ASME	UNS Number	U.K. BS	GERMANY DIN	JAPAN JIS	CHINA GB	EUROPE EN	FRANCE AFNOR	ITALY UNI
1 1/4 Cr-1/2 Mo-Si Plate EN/DIN 1.7335	SA-387 11	K11789	BS 1501 620 Gr.27, Gr.31 621	DIN 17155 13 CrMo 44	JIS 4109 SCMV 2,3	15CrMoR	EN 10028/2 1.7335 13 CrMo 4 5	NFA 36-205 13 CrMo 4 5 NFA 36-206 15 CD 3.05 15 CD 4.05	UNI 5869 14 CrMo 4 5
1 1/4 Cr-1/2 Mo-Si Forging EN/DIN 1.7335	SA-182 F11 SA-336-F11	K11572	BS 1503 620-440, 540 621-460	SEW 810 12 CrMo 44 13 CrMo 44	JIS G 3213 SFHV 23B JIS G 3203 SFVA F11	JB 755 15CrMoR	EN 10222 14 CrMo 4-5	NFA 36-602 15 CD 4.05	14 CrMo 4 5
1 1/4 Cr-1/2 Mo-Si Smls Pipe EN/DIN 1.7335	SA-335 P11	K11597	BS 3604 620, 621 620-440	DIN 17175 13 CrMo 44	JIS G 3458 STPA 23	15CrMoR		NFA 49-213 TU 10 CD 5.05	
1 1/4 Cr-1/2 Mo-Si Smls Tube EN/DIN 1.7335	SA-213-T11 *(SA-199-T11)*	K11597	BS 3606 CFS 621	DIN 17175 13 CrMo 44	JIS G 3462 STBA 23 SC,SH	15CrMoR		NFA 49-213 TU 10 CD 5.05	
2 1/4 Cr-1 Mo Plate EN/DIN 1.7380	SA-387 22	K21590	BS 1501 622 Gr.31, Gr.45 622-515	DIN 17155 10 CrMo 9 10	JIS G 4109 SCMV 4	12Cr2Mo1R	EN 10028/2 1.7380, 1.7383 10 CrMo 9-10 11 CrMo 9-10	NFA 36-205 10 CrMo 9-10 NFA 36-206 10 CD 9.10 10 CD 12.10 NFA 36-210 12 CD 9.10	UNI 5869 12 CrMo 9 10 UNI 7660 12 CrMo 9-10 KG,KW
2 1/4 Cr-1 Mo Forging EN/DIN 1.7380	SA-182 F22 SA-336-F22	K21590	BS 1503 622-490, 560, 650	DIN 17243 10 CrMo 9 10 SEW 810 10 CrMo 9 10	JIS G 3203 SFVA F22 JIS G 3206 SFVCM F22V JIS G 3213 SFHV 24B	JB 755 12Cr2Mo1R	EN 10222 11 CrMo 9-10 12 CrMo 9-10	NFA 36-602 10 CD 9.10 10 CD 12.10	

©Tubular Exchanger Manufacturers Association, Inc.

TABLE D-4 (continued)

INTERNATIONAL MATERIAL SPECIFICATIONS

Nominal Composition / EN / DIN Numerical Designator	USA ASME	UNS Number	U.K. BS	GERMANY DIN	JAPAN JIS	CHINA GB	EUROPE EN	FRANCE AFNOR	ITALY UNI
2 1/4 Cr-1 Mo Smls Pipe EN/DIN 1.7380	SA-335 P22	K21590	BS 3604 622	DIN 17175 10 CrMo 9 10	JIS G 3458 STPA 24	12Cr2Mo1R		NFA 49-213 TU 10 CD 9.10	
2 1/4 Cr-1 Mo Smls Tube EN/DIN 1.7380	SA-213-T22 *(SA-199-T22)*	K21590	BS 3059 622-490 BS 3606 622	DIN 17175 10 CrMo 9 10	G3462 STBA 24 SC,SH	12 Cr2Mo 12Cr2Mo1R		NFA 49-213 TU 10 CD 9.10	
5 Cr-1/2 Mo Plate EN/DIN 1.7362	SA-387 5	K41545		DIN 17155 12 CrMo 19 5	JIS G 4109 SCMV 6		EN 10028 1.7362	NFA 36-206 Z 10 CD 5.05	UNI 7660 16 CrMo 20 5 KG,KW
5 Cr-1/2 Mo Forging EN/DIN 1.7362	SA-336-F5 *(SA-182 F5)*	K41545	BS 1503 625-590, 520	DIN 17243 12 CrMo 19 5	JIS G 3203 SFVA F5	1 Cr5Mo	EN 10222 X16CrMo5-1	NFA 36-602 Z 10 CD 5.05	
5 Cr-1/2 Mo Smls Pipe EN/DIN 1.7362	SA-335 P5	K41545	BS 3604 625	DIN 17175 12 CrMo 19 5	JIS G 3458 STPA 25	1 Cr5Mo		NFA 49-213 TUZ 12 CD 5.05	
5 Cr-1/2 Mo Smls Tube EN/DIN 1.7362	SA-213-T5 *(SA-199 -T5)*	K41545	BS 3606 CFS 625	DIN 17176 12 CrMo 19 5 WNr 1.7362	G3462 STBA 25			NFA 49-213 TUZ 12 CD 5.05	
304 S.S. Plate (18 Cr-8 Ni) EN/DIN 1.4301	SA-240-304	S30400	BS 1501 304 S 15 304 S 31 304 S 50	DIN 17440 5 CrNi 18 9 SEW 680 5 CrNi 18 10	JIS G 4304 SUS 304	0Cr18Ni9	EN 10028 5 CrNi 18-10 6 CrNi 18-10	NFA 36-209 6 CN 18.09 5 CN 18.09	UNI 7500 X 5 CrNi 18 10 UNI 7660 X 5 CrNi 18 10
304 S.S. Forging (18 Cr-8 Ni) EN/DIN 1.4301	SA-182 F304 SA-336-F304	S30400	BS 970 304 S 31 BS 1503 304 S 31 304 S 40	DIN 17440 2 CrMo 18 12 5 CrNi 18 9 SEW 880 5 CrMo 18 10	JIS G3214 SUS F 304 SUS F 804	0Cr18Ni9	EN 10222 5 CrNi 18 10 EN 10250 5 CrNi 18-10	NFA 36-607 6 CN 18.09	

©Tubular Exchanger Manufacturers Association, Inc.

TABLE D-4 (continued)

INTERNATIONAL MATERIAL SPECIFICATIONS

Nominal Composition EN / DIN Numerical Designator	USA ASME	UNS Number	U.K. BS	GERMANY DIN	JAPAN JIS	CHINA GB	EUROPE EN	FRANCE AFNOR	ITALY UNI
304 S.S. Smls or Wld Pipe (18 Cr-8 Ni) EN/DIN 1.4301	SA-312 TP304	S30403	BS 3605 (CFS - Smls) (LWHT - Wld) Grade 801 304 S 18 304 S 25 304 S 31 EN58E	DIN 2462 5 CrNi 18 9 DIN 17458/57 (58=Smls/57=Wld) 5 CrNi 18 10 SEW 680 5 CrNi 18 10	JIS G 3459 SUS 304TP	0Cr18Ni9			
304 S.S. Smls Tube (18 Cr-8 Ni) EN/DIN 1.4301	SA-213 TP304	S30400	BS 3059 304S51 BS 3606 (CFS) 304 S 31	DIN 2464 5CrNi189 DIN 17458 5 CrNi 18 10 SEW 680 5CrNi1810	JIS G 3463 SUS 304TB-SC	GB 5310 0Cr18Ni9 1Cr18Ni9		NFA 49-217 TU6CN18-09	UNI 6904 X 5 CrNi 18 10
304 S.S. Wld Tube (18 Cr-8 Ni) EN/DIN 1.4301	SA-249 TP304	S30400	BS 3605 (LWHT) 304 S 31 BS 3606 (LWHT) 304 S 25 304 S 31	DIN 2465 5 CrNi 18 9 DIN 17457 5 CrNi 18 10 SEW 680 5 CrNi 18 10	JIS G 3463 SUS 304 TB-AC	0Cr18Ni9			
304L S.S. Plate (18 Cr-8 Ni) EN/DIN 1.4306	SA-240-304L	S30403	BS 1501 304 S 11 304 S 12 304 S 14	DIN 17440 2 CrNi 18 9 S CrNi 19 11	JIS G 4304 SUS 304L	0Cr19Ni10	EN 10028 2 CrNi 18-9 2 CrNi 19-11	NFA 36-209 2 CN 18.10	UNI 7500 X 2 CrNi 18 11 UNI 7660 X 2 CrNi 18 11

©Tubular Exchanger Manufacturers Association, Inc.

TABLE D-4 (continued)

INTERNATIONAL MATERIAL SPECIFICATIONS

Nominal Composition / EN / DIN Numerical Designator	USA ASME	UNS Number	U.K. BS	GERMANY DIN	JAPAN JIS	CHINA GB	EUROPE EN	FRANCE AFNOR	ITALY UNI
304L S.S. Forging (18 Cr-8 Ni) EN/DIN 1.4306	SA-182 F304L SA-336-F304L	S30403	BS 970 304 S 11 BS 1503 304 S 11 304 S 30	DIN 17440 2 CrNi 18 9 2 CrNi 19 11	JIS G3214 SUS F 304L		EN 10222 2 CrNi 18 9 EN 10250 2 CrNi 18-9 2 CrNi 19-11	NFA 36-607 2 CN 18.10	
304L S.S. Smls or Wld Pipe (18 Cr-8 Ni) EN/DIN 1.4306	SA-312 TP304L	S30403	BS 3605 (CFS - Smls) (LWHT - Wld) Grade 801L 304 S 11 304 S 14 304 S 22	DIN 2463 2 CrNi 18 9 DIN 17458/57 (58=Smls/57=Wld) 2 CrNi 19 11	JIS G 3459 SUS 304LTP	0Cr19Ni10			
304L S.S. Smls Tube (18 Cr-8 Ni) EN/DIN 1.4306	SA-213 TP304L	S30403	BS 3606 (CFS) 304 S 11	DIN 2464 2 CrNi 18 9 DIN 17458 2 CrNi 19 11	JIS G 3463 SUS 304LTB-SC	0Cr19Ni10		NFA 49-217 TUZ 2 CN18-10	UNI 6904 X 2 CrNi 18 11
304L S.S. Wld Tube (18 Cr-8 Ni) EN/DIN 1.4306	SA-249 TP304L	S30403	BS 3605 (LWHT) 304 S 11 BS 3606 (LWHT) 304 S 11; 304 S 22	DIN 17457 2 CrNi 19 11	JIS G 3463 SUS 304LTB-AC	0Cr19Ni10			
316 S.S. Plate (16 Cr-12 Ni-2 Mo) EN/DIN 1.4401/1.4436	SA-240-316	S31600	BS 1501 316 S 16 316 S 31 EN58J	DIN 17440 5 CrNiMo 18 10 5 CrNiMo 18 12 5 CrNiMo 17 13 3	JIS G 4304 SUS 316 SCS 14	0Cr17Ni12Mo2	EN 10028 5 CrNiMo 17-12-2 5 CrNiMo 17-13-3 3 CrNiMo 17-13-3	NFA 36-209 6 CND 17.11 6 CND 17.12 7 CND 17.11	UNI 7500 X 5 CrNiMo 17 12 X 5 CrNiMo 17 13 UNI 7660 X 5 CrNiMo 17 12
316 S.S. Forging (16 Cr-12 Ni-2 Mo) EN/DIN 1.4401/1.4436	SA-182 F316 SA-336-F316	S31600	BS 970 316 S 31 BS 1503 316 S 31; 316 S 33 316 S 40, 316 S 41	DIN 17440 5 CrNiMo 17 12 2	JIS G3214 SUS F 316L	0Cr17Ni12 Mo2		NFA 36-607 6 CND 17.11	

©Tubular Exchanger Manufacturers Association, Inc.

TABLE D-4 (continued)

INTERNATIONAL MATERIAL SPECIFICATIONS

Nominal Composition EN / DIN Numerical Designator	USA ASME	UNS Number	U.K. BS	GERMANY DIN	JAPAN JIS	CHINA GB	EUROPE EN	FRANCE AFNOR	ITALY UNI
316 S.S. Smls or Wld Pipe (16 Cr-12 Ni-2 Mo) EN/DIN 1.4401/1.4436	SA-312 TP316	S31600	BS 3605 (CFS - Smls) (LWHT - Wld) Grade 845 316 S 18; 316 S 26 316 S 31 EN58J	DIN 2462 5 CrNiMo 18 10 5 CrNiMo 18 12 DIN 17458/57 (58=Smls/57=Wld) 5 CrNiMo 17 12 2	JIS G 3459 SUS 316TP	0Cr17Ni12 Mo2			
316 S.S. Smls Tube (16 Cr-12 Ni-2 Mo) EN/DIN 1.4401/1.4436	SA-213 TP316	S31600	BS 3606 (CFS) 316 S 31	DIN 2464 5 CrNiMo18 10 5 CrNiMo18 12 DIN 17458 5 CrNiMo 17 12 2	JIS G 3463 SUS 316TB-SC	0Cr17Ni12 Mo2		NFA 49-214 Z 6CND17-12B NFA 49-217 TUZ 6CND17-11	UNI 6904 X 5 CrNiMo 17 12 X 5 CrNiMo 17 13
316 S.S. Wld Tube (16 Cr-12 Ni-2 Mo) EN/DIN 1.4401/1.4436	SA-249 TP316	S31600	BS 3605 (LWHT) 316 S 31 BS 3606 (LWHT) 316 S 25 316 S 30; 316 S 31	DIN 2465 5 CrNiMo 18 10 5 CrNiMo 18 12 DIN 17457 5 CrNiMo 17 12 2	JIS G 3463 SUS 316TB-AC	0Cr17Ni12 Mo2			
316L S.S. Plate (16 Cr-12 Ni-2 Mo) EN/DIN 1.4404/1.4435	SA-240-316L	S31603	BS 1501 316 S 11 316 S 24 316 S 37	DIN 17440 7 CrNiMo 18 10 7 CrNiMo 18 12 2 CrNiMo 17 13 2	JIS G 4304 SUS 316L SCS 16	0Cr17Ni14Mo2	EN 10028 2 CrNiMo 17-12-2 2 CrNiMo 17-13-2 2 CrNiMo 18-14-3	NFA 36-209 2 CND 17.12 2 CND 17.13 2 CND 18.13 3 CND 17.11	UNI 7500 X 2 CrNiMo 17 12 X 2 CrNiMo 17 13 UNI 7660 X 2 CrNiMo 17 13
316L S.S. Forging (16 Cr-12 Ni-2 Mo) EN/DIN 1.4404/1.4435	SA-182 F316L SA-336-F316L	S31603	BS 970 316 S 11 BS 1503 316 S 11 316 S 13 316 S 30	2 CrNiMo 17 13 2 2 CrNiMo 18 14 3 DIN 17440 2 CrNiMo 18 10 2 CrNiMo 17 13 2 2 CrNiMo 18 12	JIS G3214 SUS F 316L	0Cr17Ni14 Mo2		NFA 36-607 2 CND 17.12 2 CND 18.13	

©Tubular Exchanger Manufacturers Association, Inc.

TABLE D-4 (continued)

INTERNATIONAL MATERIAL SPECIFICATIONS

Nominal Composition EN / DIN Numerical Designator	USA ASME	UNS Number	U.K. BS	GERMANY DIN	JAPAN JIS	CHINA GB	EUROPE EN	FRANCE AFNOR	ITALY UNI
316L S.S. Smls or Wld Pipe (16 Cr-12 Ni-2 Mo) EN/DIN 1.4404/1.4435	SA-312 TP316L	S31603	BS 3605 (CFS - Smls) (LWHT - Wld) Grade 845L 316 S 11 316 S 14 316 S 22	DIN 2462 2 CrNiMo 18 10 2 CrNiMo 18 12 DIN 17458/57 (58=Smls/57=Wld) 2 CrNiMo 17 13 2	JIS G 3459 SUS 316LTP	0Cr17Ni14 Mo2			
316L S.S. Smls Tube (16 Cr-12 Ni-2 Mo) EN/DIN 1.4404/1.4435	SA-213 TP316L	S31603	BS 3606 (CFS) 316 S 11	DIN 2464 2 CrNiMo 18 10 2 CrNiMo 18 12 DIN 17458 2 CrNiMo 17 13 2	JIS G 3463 SUS 316LTB-SC	0Cr17Ni14 Mo2		NFA 49-217 TUZ 2CND17-12	UNI 6904 X 2 CrNiMo 17 12 X 2 CrNiMo 17 13
316L S.S. Wld Tube (16 Cr-12 Ni-2 Mo) EN/DIN 1.4404/1.4435	SA-249 TP316L	S31603	BS 3605 (LWHT) 316 S 11 BS 3606 (LWHT) 316 S 11 316 S 24; 316 S 29	DIN 2465 2 CrNiMo 18 10 2 CrNiMo 18 12 DIN 17457 2 CrNiMo 17 13 2	JIS G 3463 SUS 316LTB-AC	0Cr17Ni14 Mo2			
321 S.S. Plate (18 Cr-10 Ni-Ti) EN/DIN 1.4541	SA-240-321	S32100	BS 1501 321 S 12 321 S 31 321 S 49 321 S 87 EN58B	DIN 17440 10 CrNiTi 18 10 6 CrNiTi 18 10 12 CrNiTi 18 12 SEW 880 10 CrNiTi 18 10	JIS G 4304 SUS 321	0Cr18Ni10Ti	EN 10028 6 CrNiTi 18-10	NFA 36-209 6 CNT 18.10	UNI 7500 X 6 CrNiTi 18 11 UNI 7660 X 6 CrNiTi 18 11
321 S.S. Forging (18 Cr-10 Ni-Ti) EN/DIN 1.4541	SA-182 F321 SA-336-F321	S32100	BS 1503 321 S 31 321 S 50 321 S 51-490 321 S 51-510	DIN 17440 12 CrNiTi 18 9 10 CrNiMo 18 10 6 CrNiTi 18 10 SEW 680 10 CrNiMo 18 10	JIS G3214 SUS F 321	0Cr18Ni10Ti		NFA 36-607 6 CNT 18.10	

©Tubular Exchanger Manufacturers Association, Inc.

TABLE D-4 (continued)

INTERNATIONAL MATERIAL SPECIFICATIONS

Nominal Composition EN / DIN Numerical Designator	USA ASME	UNS Number	U.K. BS	GERMANY DIN	JAPAN JIS	CHINA GB	EUROPE EN	FRANCE AFNOR	ITALY UNI
321 S.S. Smls or Wld Pipe (18 Cr-10 Ni-Ti) EN/DIN 1.4541	SA-312 TP321	S32100	BS 3605 (CFS - Smls) (LWHT - Wld) Grade 822 Ti 321 S 18 321 S 22 321 S 31 321 S 59 EN58B	DIN 2462 10 CrNiTi 18 9 DIN 17458/57 (58=Smls/57=Wld) 6 CrNiTi 18 10 SEW 680 10 CrNiTi 18 10	JIS G 3459 SUS 321TP	0Cr18Ni10Ti			
321 S.S. Smls Tube (18 Cr-10 Ni-Ti) EN/DIN 1.4541	SA-213 TP321	S32100	BS 3606 (CFS) 321 S 31	DIN 2464 10 CrNiTi 18 9 DIN 17458 6 CrNiTi 18 10 SEW 680 10 CrNiTi 18 10	JIS G 3463 SUS 321TB-SC	0Cr18Ni10Ti		NFA 49-214 Z 6 CNT18-2B NFA 49-217 TUZ 6 CNT18-10	UNI 6904 X 6 CrNiTi 18 11
321 S.S. Wld Tube (18 Cr-10 Ni-Ti) EN/DIN 1.4541	SA-249 TP321	S32100	BS 3605 (LWHT) 321 S 31 BS 3606 (LWHT) 321 S 22 322 S 31	DIN 2465 10 CrNiMo 18 9 DIN 17457 6 CrNiTi 18 10 SEW 650 10 CrNiMo 18 10	JIS G 3463 SUS 321TB-AC	0Cr18Ni10Ti			
347 S.S. Plate (18 Cr-10 Ni-Cb) EN/DIN 1.4550	SA-240-347	S34700	BS 1501 347 S 17 347 S 31 347 S 49	DIN 17440 5 CrNiNb 19 9 6 CrNiNb 18 10 10 CrNiTi 18 9	JIS G 4304 SUS 347 SCS 21		EN 10028 6 CrNiNb 18-10	NFA 36-209 6 CNNb 18.10	UNI 7500 X 6 CrNiNb 18 11 X 8 CrNiNb 18 11 UNI 7660 X 6 CrNiNb 18 11

©Tubular Exchanger Manufacturers Association, Inc.

TABLE D-4 (continued)

INTERNATIONAL MATERIAL SPECIFICATIONS

Nominal Composition EN / DIN Numerical Designator	USA ASME	UNS Number	U.K. BS	GERMANY DIN	JAPAN JIS	CHINA GB	EUROPE EN	FRANCE AFNOR	ITALY UNI
347 S.S. Forging (18 Cr-10 Ni-Cb) EN/DIN 1.4550	SA-182 F347 SA-336-F347	S34700	BS 1503 347 S 31 347 S 40 347 S 50 347 S 51	6 CrNiNb 18 10 DIN 17440 10 CrNiMo18 9 6 CrNiNb 18 10 SEW 680 10 CrNiMo18 10	JIS G3214 SUS F 347			NFA 36-607 6 CNNb 18.10	
347 S.S. Smls or Wld Pipe (18 Cr-10 Ni-Cb) EN/DIN 1.4550	SA-312 TP347	S34700	BS 3605 (CFS - Smls) (LWHT - Wld) Grade 822 Nb 347 S 18 347 S 31 347 S 59 EN58G	DIN 2462 10 CrNiNb 18 10 DIN 17458/57 (58=Smls/57=Wld) 6 CrNiNb 18 10 SEW 680 10 CrNiNb 18 9	JIS G 3459 SUS 347TP	0Cr18Ni11Nb			
347 S.S. Smls Tube (18 Cr-10 Ni-Cb) EN/DIN 1.4550	SA-213 TP347	S34700	BS 3059 347S51 BS 3606 (CFS) 347 S 31	DIN 2464 10 CrNiMo 18 9 DIN 17458 6 CrNiNb 18 10 SEW 680 10 CrNiMo 18 10	JIS G 3463 SUS 347TB-SC	0Cr18Ni11Nb GB 5310 1Cr19Ni11Nb		NFA 49-214 Z 6 CNNb18-12B	UNI 6904 X 6 CrNiNb 18 11 X 8 CrNiNb 18 11
347 S.Stl. Wld Tube (18 Cr-10 Ni-Cb) EN/DIN 1.4550	SA-249 TP347	S34700	BS 3505 (LWHT) 347 S 31 BS 3606 (LWHT) 347 S 31	DIN 17457 6 CrNiNb 18 10	JIS G 3463 SUS 347TB-AC	0Cr18Ni11Nb			

©Tubular Exchanger Manufacturers Association, Inc.

TABLE D-4 (continued)

INTERNATIONAL MATERIAL SPECIFICATIONS

Nominal Composition EN / DIN Numerical Designator	USA ASME	UNS Number	U.K. BS	GERMANY DIN	JAPAN JIS	CHINA GB	EUROPE EN	FRANCE AFNOR	ITALY UNI
410 S.Stl. (Ferritic) Plate 13 Cr EN/DIN 1.4006	SA-240-410	S41000	410 S 21 410 C 21 420 S 29 EN56B	DIN 17440 10 Cr 13 15 Cr 13	JIS G 4304 SUS 410 SCS 1		12 Cr 13	Z 12 C 13 Z 10 C 13	UNI 7660 X 12 Cr 13 KG,KW X 10 Cr 13
410S S.Stl. (Ferritic) Plate 13 Cr EN/DIN 1.4000/1.4001	SA-240-410S	S41008	BS 1501 403 S 17	DIN 17440 6 Cr 13 7 Cr 14	JIS G 4304 SUS 403 SUS 410 S	0Cr13		Z 6 C 13 Z 3 C 14	X 6 Cr 13
410 S.Stl. (Ferritic) Smls or Wld Tube 13 Cr EN/DIN 1.4006	SA-268 TP410	S41000		DIN 2462 10 Cr 13	JIS G 3463 SUS 410TB		12 Cr 13	Z 12 C 13	UNI 6904 12 Cr 13
Copper Tube	SB-111	C12200	BS 2871 CN106	DIN 17671 SF-Cu	JIS H3300 C 1220		EN 12451/52 CW024A	NFA 51-124 Cu-DHP	
N. R. Brass Plate EN/DIN 2.0530	SB-171	C46400 C46500	BS 2870 CZ112 BS 2875 CZ112	DIN 17670 CuZn38 Sn1 DIN 17675 CuZn39 Sn	JIS H3100 C 4640 P		EN 1653 CW717R	NFA 51-115 CuZn38 Sn1	
Admiralty Brass Smls Tube EN/DIN 2.0470	SB-111	C44300 C44400 C44500	BS 2871 CZ111	DIN 17671 CuZn28 Sn1	JIS H3300 C 4430 T		EN 12451/52 CW706R		
70-30 CuNi Plate EN/DIN 2.0820	SB-171	C71500	BS 2870 CN107 BS 2875 CN107	DIN 17670 CuNi30Mn1Fe DIN 17675 CuNi30Fe	JIS H3100 C 7150 P		EN 1653 CW354H	NFA 51-115 CuNi30FeMn	
70-30 Smls Tube EN/DIN 2.0820	SB-111	C71500	BS 2871 CN107	DIN 1785 CuNi30Mn1Fe CuNi30Fe	JIS H3300 C 7150		EN 12451/52 CW354H	NFA 51-102 CuNi30Mn1Fe	

©Tubular Exchanger Manufacturers Association, Inc.

TABLE D-4 (continued)

INTERNATIONAL MATERIAL SPECIFICATIONS

Nominal Composition / EN / DIN Numerical Designator	USA ASME	UNS Number	U.K. BS	GERMANY DIN	JAPAN JIS	CHINA GB	EUROPE EN	FRANCE AFNOR	ITALY UNI
90-10 Plate EN/DIN 2.0872/2.0877	SB-171	C70600	BS 2870 CN102 BS 2875 CN102	DIN 17670 CuNi10Fe1Mn DIN 17675 CuNi10Fe	JIS H3100 C 7060 P		EN 1653 CW352H	NFA 51-115 CuNi10Fe1Mn	
90-10 Smls Tube EN/DIN 2.0872/2.0877	SB-111	C70600	BS 2871 CN102	DIN 1785 CuNi10Fe1Mn	JIS H3300 C 7060 T		EN 12451/52 CW352H	NFA 51-102 CuNi10Fe1Mn	
Monel 400 Plate EN/DIN 2.4360	SB-127	N04400	BS 3072 NA13 BS 3073 NA13	DIN 17750 NiCu30Fe	JIS H4551 NCuP NW4400				
Monel 400 Smls Tube EN/DIN 2.4360	SB-163	N04400	BS 3074 NA13	DIN 17751 NiCu30Fe DIN 17743 NiCu30Fe	JIS H4552 NCuT NW4400			NU 30	
Inconel 600 Plate EN/DIN 2.4640	SB-168	N06600	BS 3072 NA14 BS 3073 NA14	DIN 17750 NiCr15Fe	JIS G4902 NCF600				
Inconel 600 Smls Tube EN/DIN 2.4640	SB-163	N06600	BS 3074 NA14	DIN 17751 NiCr15Fe DIN 17742 NiCr15Fe	JIS G4904 NCF600 TB			NC 15 Fe	

©Tubular Exchanger Manufacturers Association, Inc.

TABLE D-4 (continued)

INTERNATIONAL MATERIAL SPECIFICATIONS

Nominal Composition / EN / DIN Numerical Designator	USA ASME	UNS Number	U.K. BS	GERMANY DIN	JAPAN JIS	CHINA GB	EUROPE EN	FRANCE AFNOR	ITALY UNI
Inconel 625 Plate / EN/DIN 2.4856	SB-443	N06625	BS 3072 NA21 BS 3073 NA21	DIN 17750 NiCr22Mo 9Nb	JIS G4902 NCF625				
Inconel 625 Smls Tube / EN/DIN 2.4856	SB-444	N06625	BS 3074 NA21	DIN 17751 NiCr22Mo 9Nb	JIS G4904 NCF625 TB				

©Tubular Exchanger Manufacturers Association, Inc.

TABLE D-5
BOLTING DATA – RECOMMENDED MINIMUM

(dimensions in inches unless noted)

bolt Size dB	Threads		Nut Dimensions		Bolt Spacing B	Radial Distance Rh	Radial Distance Rr	Edge Distance E	Wrench Diameter a	bolt Size dB
	No. of Threads	Root Area in^2	Across Flats	Across Corners						
1/2	13	0.126	7/8	0.969	1 1/4	13/16	5/8	5/8	1 1/2	1/2
5/8	11	0.202	1 1/16	1.175	1 1/2	15/16	3/4	3/4	1 3/4	5/8
3/4	10	0.302	1 1/4	1.383	1 3/4	1 1/8	13/16	13/16	2 1/16	3/4
7/8	9	0.419	1 7/16	1.589	2 1/16	1 1/4	15/16	15/16	2 3/8	7/8
1	8	0.551	1 5/8	1.796	2 1/4	1 3/8	1 1/16	1 1/16	2 5/8	1
1 1/8	8	0.728	1 13/16	2.002	2 1/2	1 1/2	1 1/8	1 1/8	2 7/8	1 1/8
1 1/4	8	0.929	2	2.209	2 13/16	1 3/4	1 1/4	1 1/4	3 1/4	1 1/4
1 3/8	8	1.155	2 3/16	2.416	3 1/16	1 7/8	1 3/8	1 3/8	3 1/2	1 3/8
1 1/2	8	1.405	2 3/8	2.622	3 1/4	2	1 1/2	1 1/2	3 3/4	1 1/2
1 5/8	8	1.680	2 9/16	2.828	3 1/2	2 1/8	1 5/8	1 5/8	4	1 5/8
1 3/4	8	1.980	2 3/4	3.035	3 3/4	2 1/4	1 3/4	1 3/4	4 1/4	1 3/4
1 7/8	8	2.304	2 15/16	3.242	4	2 3/8	1 7/8	1 7/8	4 1/2	1 7/8
2	8	2.652	3 1/8	3.449	4 1/4	2 1/2	2	2	4 3/4	2
2 1/4	8	3.423	3 1/2	3.862	4 3/4	2 3/4	2 1/4	2 1/4	5 1/4	2 1/4
2 1/2	8	4.292	3 7/8	4.275	5 1/4	3 1/16	2 1/2	2 3/8	5 7/8	2 1/2
2 3/4	8	5.259	4 1/4	4.688	5 3/4	3 3/8	2 3/4	2 5/8	6 1/2	2 3/4
3	8	6.324	4 5/8	5.102	6 1/4	3 5/8	3	2 7/8	7	3
3 1/4	8	7.487	5	5.515	6 5/8	3 3/4	3 1/4	3	7 1/4	3 1/4
3 1/2	8	8.749	5 3/8	5.928	7 1/8	4 1/8	3 1/2	3 1/4	8	3 1/2
3 3/4	8	10.108	5 3/4	6.341	7 5/8	4 7/16	3 3/4	3 1/2	8 5/8	3 3/4
4	8	11.566	6 1/8	6.755	8 1/8	4 5/8	4	3 5/8	9	4

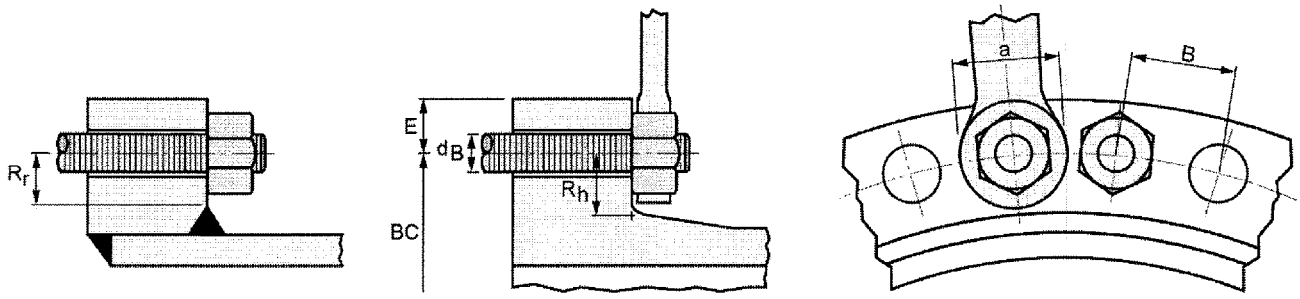

Nut dimensions are based on American National Standard B18.2.2

Threads are National Course series below 1 inch and eight pitch thread series 1 inch and above

©Tubular Exchanger Manufacturers Association, Inc.

TABLE D-5M
METRIC BOLTING DATA – RECOMMENDED MINIMUM

(dimensions in millimeters unless noted)

Bolt Size dB	Threads		Nut Dimensions		Bolt Spacing B	Radial Distance Rh	Radial Distance Rr	Edge Distance E	Wrench Diameter a	Bolt Size dB
	Pitch	Root Area (mm^2)	Across Flats	Across Corners						
M12	1.75	72.396	21.00	24.25	31.60	20.64	15.40	15.40	38.00	M12
M14	2.00	99.773	24.00	27.71	35.60	22.36	16.90	16.90	42.50	M14
M16	2.00	138.324	27.00	31.18	39.70	24.10	19.50	19.50	47.00	M16
M18	2.50	167.966	30.00	34.64	43.70	26.25	21.50	21.00	51.50	M18
M20	2.50	217.051	34.00	39.26	46.80	28.20	23.00	22.50	53.00	M20
M22	2.50	272.419	36.00	41.57	51.50	30.50	26.50	26.00	60.00	M22
M24	3.00	312.748	41.00	47.34	57.50	33.50	29.50	29.00	66.00	M24
M27	3.00	413.852	46.00	53.12	65.00	38.00	31.00	30.50	75.00	M27
M30	3.50	502.965	50.00	57.74	69.90	40.50	33.00	32.50	80.00	M30
M33	3.50	630.218	55.00	63.25	76.50	44.25	36.00	35.50	87.50	M33
M36	4.00	738.015	60.00	69.28	82.60	47.25	38.00	37.50	93.50	M36
M39	4.00	889.535	65.00	74.75	89.20	51.00	42.00	41.50	101.00	M39
M42	4.50	1018.218	70.00	80.83	96.60	55.25	45.00	44.00	109.50	M42
M45	4.50	1194.958	75.00	86.25	101.90	57.75	47.50	46.50	114.50	M45
M48	5.00	1342.959	80.00	92.38	109.30	62.00	51.00	50.00	123.00	M48
M52	5.00	1616.336	85.00	97.75	115.00	65.00	56.00	54.00	129.00	M52
M56	5.50	1862.725	90.00	103.92	124.70	71.50	58.50	56.50	142.00	M56
M64	6.00	2467.150	100.00	115.47	135.70	76.50	64.00	61.50	152.00	M64
M72	6.00	3221.775	110.00	127.02	151.70	86.50	71.00	66.50	172.00	M72
M80	6.00	4076.831	120.00	138.56	162.60	91.50	78.50	74.00	182.00	M80
M90	6.00	5287.085	135.00	155.88	181.50	101.50	88.50	84.00	202.00	M90
M100	6.00	6651.528	150.00	173.21	202.50	113.50	93.50	90.50	226.00	M100

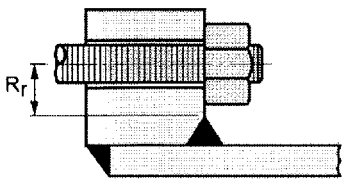

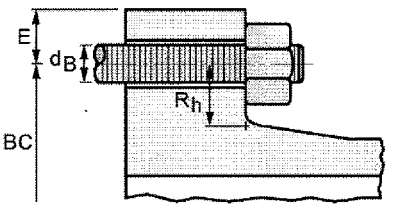

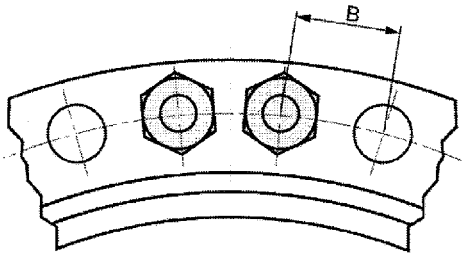

 ©Tubular Exchanger Manufacturers Association, Inc.

TABLE D-7

CHARACTERISTICS OF TUBING

Tube O.D. inches	B.W.G. Gage	Thickness inches	Internal Area Sq. Inch	Sq. Ft. External Surface Per Foot Length	Sq. Ft. Internal Surface Per Foot Length	Weight Per Ft. Length Steel Lbs.*	Tube I.D. Inches	Moment of Inertia Inches^4	Section Modulus Inches^3	Radius of Gyration Inches	Constant C**	O.D. / I.D.	Transverse Metal Area Sq Inch
1/4	22	0.028	0.0296	0.0654	0.0508	0.066	0.194	0.00012	0.00098	0.0791	46	1.289	0.0195
	24	0.022	0.0333	0.0654	0.0539	0.054	0.206	0.00010	0.00083	0.0810	52	1.214	0.0158
	26	0.018	0.0360	0.0654	0.0560	0.045	0.214	0.00009	0.00071	0.0823	56	1.168	0.0131
	27	0.016	0.0373	0.0654	0.0571	0.040	0.218	0.00008	0.00065	0.0829	58	1.147	0.0118
3/8	18	0.049	0.0603	0.0982	0.0725	0.171	0.277	0.00068	0.0036	0.1166	94	1.354	0.0502
	20	0.035	0.0731	0.0982	0.0798	0.127	0.305	0.00055	0.0029	0.1208	114	1.230	0.0374
	22	0.028	0.0799	0.0982	0.0835	0.104	0.319	0.00046	0.0025	0.1231	125	1.176	0.0305
	24	0.022	0.0860	0.0982	0.0867	0.083	0.331	0.00038	0.0020	0.1250	134	1.133	0.0244
1/2	16	0.065	0.1075	0.1309	0.0969	0.302	0.370	0.0021	0.0086	0.1555	168	1.351	0.0888
	18	0.049	0.1269	0.1309	0.1052	0.236	0.402	0.0018	0.0071	0.1604	198	1.244	0.0694
	20	0.035	0.1452	0.1309	0.1126	0.174	0.430	0.0014	0.0056	0.1649	227	1.163	0.0511
	22	0.028	0.1548	0.1309	0.1162	0.141	0.444	0.0012	0.0046	0.1672	241	1.126	0.0415
5/8	12	0.109	0.1301	0.1636	0.1066	0.601	0.407	0.0061	0.0197	0.1865	203	1.536	0.177
	13	0.095	0.1486	0.1636	0.1139	0.538	0.435	0.0057	0.0183	0.1904	232	1.437	0.158
	14	0.083	0.1655	0.1636	0.1202	0.481	0.459	0.0053	0.0170	0.1939	258	1.362	0.141
	15	0.072	0.1817	0.1636	0.1259	0.426	0.481	0.0049	0.0156	0.1972	283	1.299	0.125
	16	0.065	0.1924	0.1636	0.1296	0.389	0.495	0.0045	0.0145	0.1993	300	1.263	0.114
	17	0.058	0.2035	0.1636	0.1333	0.352	0.509	0.0042	0.0134	0.2015	317	1.228	0.103
	18	0.049	0.2181	0.1636	0.1380	0.302	0.527	0.0037	0.0119	0.2044	340	1.186	0.089
	19	0.042	0.2299	0.1636	0.1416	0.262	0.541	0.0033	0.0105	0.2067	359	1.155	0.077
	20	0.035	0.2419	0.1636	0.1453	0.221	0.555	0.0028	0.0091	0.2090	377	1.126	0.065
3/4	10	0.134	0.1825	0.1963	0.1262	0.833	0.482	0.0129	0.0344	0.2229	285	1.556	0.259
	11	0.120	0.2043	0.1963	0.1335	0.808	0.510	0.0122	0.0326	0.2267	319	1.471	0.238
	12	0.109	0.2223	0.1963	0.1393	0.747	0.532	0.0116	0.0309	0.2299	347	1.410	0.219
	13	0.095	0.2463	0.1963	0.1466	0.665	0.560	0.0107	0.0285	0.2340	384	1.339	0.195
	14	0.083	0.2679	0.1963	0.1529	0.592	0.584	0.0098	0.0262	0.2376	418	1.284	0.174
	15	0.072	0.2884	0.1963	0.1587	0.522	0.606	0.0089	0.0238	0.2411	450	1.238	0.153
	16	0.065	0.3019	0.1963	0.1623	0.476	0.620	0.0083	0.0221	0.2433	471	1.210	0.140
	17	0.058	0.3157	0.1963	0.1660	0.429	0.634	0.0076	0.0203	0.2455	492	1.183	0.126
	18	0.049	0.3339	0.1963	0.1707	0.367	0.652	0.0067	0.0178	0.2484	521	1.150	0.108
	20	0.035	0.3632	0.1963	0.1780	0.268	0.680	0.0050	0.0134	0.2531	567	1.103	0.079
7/8	10	0.134	0.2894	0.2291	0.1589	1.062	0.607	0.0221	0.0505	0.2662	451	1.442	0.312
	11	0.120	0.3167	0.2291	0.1662	0.969	0.635	0.0208	0.0475	0.2703	494	1.378	0.285
	12	0.109	0.3390	0.2291	0.1720	0.893	0.657	0.0196	0.0449	0.2736	529	1.332	0.262
	13	0.095	0.3685	0.2291	0.1793	0.792	0.685	0.0180	0.0411	0.2778	575	1.277	0.233
	14	0.083	0.3948	0.2291	0.1856	0.703	0.709	0.0164	0.0374	0.2815	616	1.234	0.207
	15	0.072	0.4197	0.2291	0.1914	0.618	0.731	0.0148	0.0337	0.2850	655	1.197	0.182
	16	0.065	0.4359	0.2291	0.1950	0.563	0.745	0.0137	0.0312	0.2873	680	1.174	0.165
	17	0.058	0.4525	0.2291	0.1987	0.507	0.759	0.0125	0.0285	0.2896	706	1.153	0.149
	18	0.049	0.4742	0.2291	0.2034	0.433	0.777	0.0109	0.0249	0.2925	740	1.126	0.127
	20	0.035	0.5090	0.2291	0.2107	0.314	0.805	0.0082	0.0187	0.2972	794	1.087	0.092
1	8	0.165	0.3526	0.2618	0.1754	1.473	0.670	0.0392	0.0784	0.3009	550	1.493	0.433
	10	0.134	0.4208	0.2618	0.1916	1.241	0.732	0.0350	0.0700	0.3098	656	1.366	0.365
	11	0.120	0.4536	0.2618	0.1990	1.129	0.760	0.0327	0.0654	0.3140	708	1.316	0.332
	12	0.109	0.4803	0.2618	0.2047	1.038	0.782	0.0307	0.0615	0.3174	749	1.279	0.305
	13	0.095	0.5153	0.2618	0.2121	0.919	0.810	0.0280	0.0559	0.3217	804	1.235	0.270
	14	0.083	0.5463	0.2618	0.2183	0.814	0.834	0.0253	0.0507	0.3255	852	1.199	0.239
	15	0.072	0.5755	0.2618	0.2241	0.714	0.856	0.0227	0.0455	0.3291	898	1.168	0.210
	16	0.065	0.5945	0.2618	0.2278	0.650	0.870	0.0210	0.0419	0.3314	927	1.149	0.191
	18	0.049	0.6390	0.2618	0.2361	0.498	0.902	0.0166	0.0332	0.3367	997	1.109	0.146
	20	0.035	0.6793	0.2618	0.2435	0.361	0.930	0.0124	0.0247	0.3414	1060	1.075	0.106
1 1/4	7	0.180	0.6221	0.3272	0.2330	2.059	0.890	0.0890	0.1425	0.3836	970	1.404	0.605
	8	0.165	0.6648	0.3272	0.2409	1.914	0.920	0.0847	0.1355	0.3880	1037	1.359	0.562
	10	0.134	0.7574	0.3272	0.2571	1.599	0.982	0.0742	0.1187	0.3974	1182	1.273	0.470
	11	0.120	0.8012	0.3272	0.2644	1.450	1.010	0.0688	0.1100	0.4018	1250	1.238	0.426
	12	0.109	0.8365	0.3272	0.2702	1.330	1.032	0.0642	0.1027	0.4052	1305	1.211	0.391
	13	0.095	0.8825	0.3272	0.2775	1.173	1.060	0.0579	0.0926	0.4097	1377	1.179	0.345
	14	0.083	0.9229	0.3272	0.2838	1.036	1.084	0.0521	0.0833	0.4136	1440	1.153	0.304
	16	0.065	0.9852	0.3272	0.2932	0.824	1.120	0.0426	0.0682	0.4196	1537	1.116	0.242
	18	0.049	1.0423	0.3272	0.3016	0.629	1.152	0.0334	0.0534	0.4250	1626	1.085	0.185
	20	0.035	1.0936	0.3272	0.3089	0.455	1.180	0.0247	0.0395	0.4297	1706	1.059	0.134
1 1/2	10	0.134	1.1921	0.3927	0.3225	1.957	1.232	0.1354	0.1806	0.4853	1860	1.218	0.575
	12	0.109	1.2908	0.3927	0.3356	1.621	1.282	0.1159	0.1545	0.4933	2014	1.170	0.476
	14	0.083	1.3977	0.3927	0.3492	1.257	1.334	0.0931	0.1241	0.5018	2180	1.124	0.369
	16	0.065	1.4741	0.3927	0.3587	0.997	1.370	0.0756	0.1008	0.5079	2300	1.095	0.293
2	11	0.120	2.4328	0.5236	0.4608	2.412	1.760	0.3144	0.3144	0.6660	3795	1.136	0.709
	12	0.109	2.4941	0.5236	0.4665	2.204	1.782	0.2904	0.2904	0.6697	3891	1.122	0.648
	13	0.095	2.5730	0.5236	0.4739	1.935	1.810	0.2586	0.2586	0.6744	4014	1.105	0.569
	14	0.083	2.6417	0.5236	0.4801	1.7010	1.834	0.2300	0.2300	0.6784	4121	1.091	0.500
2 1/2	10	0.134	3.9127	0.6545	0.5843	3.3893	2.232	0.6992	0.5594	0.8378	6104	1.120	0.996
	12	0.109	4.0900	0.6545	0.5974	2.7861	2.282	0.5863	0.4690	0.8462	6380	1.096	0.819
	14	0.083	4.2785	0.6545	0.6110	2.1446	2.334	0.4608	0.3686	0.8550	6674	1.071	0.630
3	10	0.134	5.8621	0.7854	0.7152	4.1056	2.732	1.2415	0.8277	1.0144	9145	1.098	1.207
	12	0.109	6.0786	0.7854	0.7283	3.3687	2.782	1.0357	0.6905	1.0228	9483	1.078	0.990
	14	0.083	6.3080	0.7854	0.7419	2.5883	2.834	0.8096	0.5398	1.0317	9840	1.059	0.761

* Weights are based on low carbon steel with a density of 0.2836 lbs./cu.in. For other metals multiply by the following factors:

Aluminum.....0.35
Titanium.....0.58
A.I.S.I 400 Series S/Steels.....0.99
A.I.S.I 300 Series S/Steels.....1.02

Aluminum Bronze..... 1.04
Aluminum Brass.....1.06
Nickel-Chrome-Iron.....1.07
Admiralty..... 1.09

Nickel..... 1.13
Nickel-Copper..... 1.12
Copper and Cupro-Nickels..... 1.14

** Liquid Velocity = $\frac{\text{lbs Per Tube Hour}}{\text{C x Sp. Gr. Of Liquid}}$ in feet per sec. (Sp.Gr. Of Water at 60 deg F = 1.0)

©Tubular Exchanger Manufacturers Association, Inc.

TABLE D-7M
CHARACTERISTICS OF TUBING

Tube O.D. mm	B.W.G. Gage	Thickness mm	Internal Area Sq. Cm.	Sq. M External Surface Per M Length	Sq. M Internal Surface Per M Length	Weight Per M length Steel Kg.*	Tube I.D. mm	Moment of Inertia cm^4	Section Modulus cm^3	Radius of Gyration mm	Constant C**	O.D. / I.D.	Transverse Metal Area Sq Cm.
6.35	22	0.711	0.1910	0.0199	0.0155	0.098	4.93	0.0050	0.0161	2.009	69	1.289	0.1258
	24	0.559	0.2148	0.0199	0.0164	0.080	5.23	0.0042	0.0136	2.057	77	1.214	0.1019
	26	0.457	0.2323	0.0199	0.0171	0.067	5.44	0.0037	0.0116	2.090	84	1.168	0.8452
	27	0.406	0.2406	0.0199	0.0174	0.060	5.54	0.0033	0.0107	2.106	87	1.147	0.0761
9.53	18	1.245	0.3890	0.0299	0.0221	0.254	7.04	0.0283	0.0590	2.962	140	1.354	0.3239
	20	0.889	0.4716	0.0299	0.0243	0.189	7.75	0.0229	0.0475	3.068	170	1.230	0.2413
	22	0.711	0.5155	0.0299	0.0255	0.155	8.10	0.0191	0.0410	3.127	185	1.176	0.1968
	24	0.559	0.5548	0.0299	0.0264	0.124	8.41	0.0158	0.0328	3.175	200	1.133	0.1574
12.7	16	1.651	0.6935	0.0399	0.0295	0.449	9.40	0.0874	0.1409	3.950	250	1.351	0.5729
	18	1.245	0.8187	0.0399	0.0321	0.351	10.21	0.0749	0.1163	4.074	295	1.244	0.4477
	20	0.889	0.9368	0.0399	0.0343	0.259	10.92	0.0583	0.0918	4.188	337	1.163	0.3297
	22	0.711	0.9987	0.0399	0.0360	0.210	11.28	0.0499	0.0787	4.247	359	1.126	0.2677
15.88	12	2.769	0.8394	0.0499	0.0325	0.894	10.34	0.2539	0.3228	4.737	302	1.536	1.1419
	13	2.413	0.9587	0.0499	0.0347	0.801	11.05	0.2373	0.2999	4.836	345	1.437	1.0194
	14	2.108	1.0677	0.0499	0.0366	0.716	11.66	0.2206	0.2786	4.925	384	1.362	0.9097
	15	1.829	1.1723	0.0499	0.0384	0.634	12.22	0.2040	0.2556	5.009	422	1.299	0.8065
	16	1.651	1.2413	0.0499	0.0395	0.579	12.57	0.1873	0.2376	5.062	447	1.263	0.7355
	17	1.473	1.3129	0.0499	0.0406	0.524	12.93	0.1748	0.2196	5.118	472	1.228	0.6645
	18	1.245	1.4071	0.0499	0.0421	0.449	13.39	0.1540	0.1950	5.192	506	1.186	0.5742
	19	1.067	1.4832	0.0499	0.0432	0.390	13.74	0.1374	0.1721	5.250	534	1.155	0.4968
	20	0.889	1.5606	0.0499	0.0443	0.329	14.10	0.1165	0.1491	5.309	562	1.126	0.4194
19.05	10	3.404	1.1774	0.0598	0.0385	1.240	12.24	0.5369	0.5637	5.662	424	1.556	1.6710
	11	3.048	1.3181	0.0598	0.0407	1.202	12.95	0.5078	0.5342	5.758	474	1.471	1.5355
	12	2.769	1.4342	0.0598	0.0425	1.112	13.51	0.4828	0.5064	5.839	516	1.410	1.4129
	13	2.413	1.5890	0.0598	0.0447	0.990	14.22	0.4454	0.4670	5.944	572	1.339	1.2581
	14	2.108	1.7284	0.0598	0.0466	0.881	14.83	0.4079	0.4293	6.035	622	1.284	1.1226
	15	1.829	1.8606	0.0598	0.0484	0.777	15.39	0.3704	0.3900	6.124	670	1.238	0.9871
	16	1.651	1.9477	0.0598	0.0495	0.708	15.75	0.3455	0.3622	6.180	701	1.210	0.9032
	17	1.473	2.0368	0.0598	0.0506	0.638	16.10	0.3163	0.3327	6.236	733	1.183	0.8129
	18	1.245	2.1542	0.0598	0.0520	0.546	16.56	0.2789	0.2917	6.309	775	1.150	0.6968
	20	0.889	2.3432	0.0598	0.0543	0.399	17.27	0.2081	0.2196	6.429	843	1.103	0.5097
22.23	10	3.404	1.8671	0.0698	0.0484	1.580	15.42	0.9199	0.8276	6.761	672	1.442	2.0129
	11	3.048	2.0432	0.0698	0.0507	1.442	16.13	0.8658	0.7784	6.866	735	1.378	1.8387
	12	2.769	2.1871	0.0698	0.0524	1.329	16.69	0.8158	0.7358	6.949	787	1.332	1.6903
	13	2.413	2.3774	0.0698	0.0547	1.179	17.40	0.7492	0.6735	7.056	855	1.277	1.5032
	14	2.108	2.5471	0.0698	0.0566	1.046	18.01	0.6826	0.6129	7.150	917	1.234	1.3355
	15	1.829	2.7077	0.0698	0.0583	0.920	18.57	0.6160	0.5522	7.239	974	1.197	1.1742
	16	1.651	2.8123	0.0698	0.0594	0.838	18.92	0.5702	0.5113	7.297	1012	1.174	1.0645
	17	1.473	2.9193	0.0698	0.0606	0.754	19.28	0.5203	0.4670	7.356	1050	1.153	0.9613
	18	1.245	3.0593	0.0698	0.0620	0.644	19.74	0.4537	0.4080	7.429	1101	1.126	0.8194
	20	0.889	3.2839	0.0698	0.0642	0.467	20.45	0.3413	0.3064	7.549	1182	1.087	0.5935
25.4	8	4.191	2.2748	0.0798	0.0535	2.192	17.02	1.6316	1.2848	7.643	819	1.493	2.7935
	10	3.404	2.7148	0.0798	0.0584	1.847	18.59	1.4568	1.1471	7.869	977	1.366	2.3548
	11	3.048	2.9264	0.0798	0.0607	1.680	19.30	1.3611	1.0717	7.976	1053	1.316	2.1419
	12	2.769	3.0987	0.0798	0.0624	1.545	19.86	1.2778	1.0078	8.062	1115	1.279	1.9677
	13	2.413	3.3245	0.0798	0.0646	1.368	20.57	1.1655	0.9160	8.171	1196	1.235	1.7419
	14	2.108	3.5245	0.0798	0.0665	1.211	21.18	1.0531	0.8308	8.268	1268	1.199	1.5419
	15	1.829	3.7129	0.0798	0.0683	1.063	21.74	0.9449	0.7456	8.359	1336	1.168	1.3548
	16	1.651	3.8355	0.0798	0.0694	0.967	22.10	0.8741	0.6866	8.418	1380	1.149	1.2323
	18	1.245	4.1226	0.0798	0.0720	0.741	22.91	0.6909	0.5441	8.555	1483	1.109	0.9419
	20	0.889	4.3826	0.0798	0.0742	0.537	23.62	0.5161	0.4048	8.672	1577	1.075	0.6839
31.75	7	4.572	4.0135	0.0997	0.0710	3.064	22.61	3.7045	2.3352	9.743	1444	1.404	3.9032
	8	4.191	4.2890	0.0997	0.0734	2.848	23.37	3.5255	2.2205	9.855	1543	1.359	3.6258
	10	3.404	4.8864	0.0997	0.0784	2.380	24.94	3.0885	1.9452	10.094	1758	1.273	3.0323
	11	3.048	5.1690	0.0997	0.0806	2.158	25.65	2.8637	1.8026	10.206	1860	1.238	2.7484
	12	2.769	5.3968	0.0997	0.0824	1.979	26.21	2.6722	1.6830	10.292	1942	1.211	2.5226
	13	2.413	5.6935	0.0997	0.0846	1.746	26.92	2.4100	1.5175	10.406	2049	1.179	2.2258
	14	2.108	5.9542	0.0997	0.0865	1.542	27.53	2.1686	1.3651	10.505	2143	1.153	1.9613
	16	1.651	6.3561	0.0997	0.0894	1.226	28.45	1.7732	1.1176	10.658	2287	1.116	1.5613
	18	1.245	6.7245	0.0997	0.0919	0.936	29.26	1.3902	0.8751	10.795	2420	1.085	1.1935
	20	0.889	7.0555	0.0997	0.0942	0.677	29.97	1.0281	0.6473	10.914	2539	1.059	0.8645
38.1	10	3.404	7.6910	0.1197	0.0983	2.912	31.29	5.6358	2.9595	12.327	2768	1.218	3.7097
	12	2.769	8.3277	0.1197	0.1023	2.412	32.56	4.8242	2.5318	12.530	2997	1.170	3.0710
	14	2.108	9.0174	0.1197	0.1064	1.871	33.88	3.8751	2.0336	12.746	3245	1.124	2.3806
	16	1.651	9.5103	0.1197	0.1093	1.484	34.80	3.1467	1.6518	12.901	3422	1.095	1.8903
50.8	11	3.048	15.6955	0.1596	0.1405	3.589	44.70	13.0864	5.1521	16.916	5648	1.136	4.5742
	12	2.769	16.0909	0.1596	0.1422	3.280	45.26	12.0874	4.7588	17.010	5790	1.122	4.1806
	13	2.413	16.6000	0.1596	0.1444	2.880	45.97	10.7638	4.2377	17.130	5973	1.105	3.6710
	14	2.108	17.0432	0.1596	0.1463	2.531	46.58	9.5734	3.7690	17.231	6133	1.091	3.2258
63.5	10	3.404	25.2418	0.1995	0.1781	5.047	56.69	29.1022	9.1660	21.277	9087	1.120	6.4287
	12	2.769	26.3854	0.1995	0.1821	4.149	57.96	24.4042	7.6864	21.489	9499	1.096	5.2847
	14	2.108	27.6027	0.1995	0.1862	3.193	59.28	19.1746	6.0392	21.713	9937	1.071	4.0670
76.2	10	3.404	37.8178	0.2394	0.2180	6.113	69.39	51.6736	13.5626	25.760	13614	1.098	7.7873
	12	2.769	39.2147	0.2394	0.2220	5.016	70.66	43.1108	11.3152	25.975	14117	1.078	6.3899
	14	2.108	40.6957	0.2394	0.2261	3.853	71.98	33.6933	8.8434	26.200	14650	1.059	4.9083

* Weights are based on low carbon steel with a density of 7.85 gm./cu.cm. For other metals multiply by the following factors:

Aluminum.....0.35	Aluminum Bronze..... 1.04	Nickel..... 1.13
Titanium.....0.58	Aluminum Brass.....1.06	Nickel-Copper..... 1.12
A.I.S.I 400 Series S/Steels.....0.99	Nickel-Chrome-Iron..... 1.07	Copper and Cupro-Nickels..... 1.14
A.I.S.I 300 Series S/Steels.....1.02	Admiralty.....1.09	

** Liquid Velocity = $\frac{\text{kg.Per Tube Hour}}{\text{C x Sp. Gr. Of Liquid}}$ in meters per sec. (Sp.Gr. Of Water at15.6 deg C = 1.0)

©Tubular Exchanger Manufacturers Association, Inc.

TABLE D-8
HARDNESS CONVERSION TABLE

APPROXIMATE RELATION BETWEEN VARIOUS HARDNESS TESTING SYSTEMS AND TENSILE STRENGTH OF CARBON AND ALLOY STEELS

Tensile Strength 1000 ksi	Brinell Hardness Number 3000-Kg. Load	Brinell Indentation Diameter mm.	ROCKWELL HARDNESS NUMBER					Diamond Pyramid Hardness Number	Sclero-scope Hardness Number	Tensile Strength 1000 ksi
			A-Scale, 60-Kg. Load, Brale Penetrator	B-Scale, 100-Kg. Load, 1/16" Dia. Ball	C-Scale, 150-Kg. Load, Brale Penetrator	D-Scale, 100-Kg. Load, Brale Penetrator	15N-Scale, 15-Kg. Load, Superficial Brale Penetrator			
384	780	2.20	...	...	...	...	...	...	...	384
368	745	2.25	...	...	65	...	...	840	91	368
352	712	2.30	...	...	64	...	...	785	87	352
337	682	2.35	82	...	62	72	91	737	84	337
324	653	2.40	81	...	60	71	90	697	81	324
323	627	2.45	81	...	59	70	90	667	79	323
318	601	2.50	81	...	59	70	90	677	77	318
309	578	2.55	80	...	57	69	89	640	75	309
293	555	2.60	79	...	56	67	88	607	73	293
279	534	2.65	78	...	54	66	88	579	71	279
266	514	2.70	77	...	53	65	87	553	70	266
259	495	2.75	77	...	52	64	86	539	68	259
247	477	2.80	76	...	50	63	86	516	66	247
237	461	2.85	75	...	49	62	85	495	65	237
226	444	2.90	74	...	47	61	84	474	63	226
217	429	2.95	73	...	46	60	83	455	61	217
210	415	3.00	73	...	45	59	83	440	59	210
202	401	3.05	72	...	43	58	82	425	58	202
195	388	3.10	71	...	42	57	81	410	56	195
188	375	3.15	71	...	40	56	81	396	54	188
182	363	3.20	70	...	39	55	80	383	52	182
176	352	3.25	69	...	38	54	79	372	51	176
170	341	3.30	69	...	37	53	79	360	50	170
166	331	3.35	68	...	36	52	78	350	48	166
160	321	3.40	68	...	34	51	77	339	47	160
155	311	3.45	67	...	33	50	77	328	46	155
150	302	3.50	66	...	32	49	76	319	45	150
145	293	3.55	66	...	31	48	76	309	43	145
141	285	3.60	65	...	30	48	75	301	42	141
137	277	3.65	65	...	29	47	74	292	41	137
133	269	3.70	64	...	28	46	74	284	40	133
129	262	3.75	64	...	27	45	73	276	39	129
126	255	3.80	63	...	25	44	73	269	38	126
122	248	3.85	63	...	24	43	72	261	37	122
118	241	3.90	62	100	23	42	71	253	36	118
115	235	3.95	61	99	22	41	70	247	35	115
111	229	4.00	60	98	21	41	70	241	34	111
110	223	4.05	60	97	20	...	...	223	32	110
107	217	4.10	59	96	...	...	...	217	31	107
104	212	4.15	59	96	...	...	...	212	31	104
101	207	4.20	58	95	...	...	...	207	30	101
99	202	4.25	58	94	...	...	...	202	30	99
97	197	4.30	57	93	...	...	...	197	29	97
95	192	4.35	57	92	...	...	...	192	28	95
93	187	4.40	56	91	...	...	...	187	28	93
91	183	4.45	56	90	...	...	...	183	27	91
89	179	4.50	55	89	...	...	...	179	27	89
87	174	4.55	54	88	...	...	...	174	26	87
85	170	4.60	54	87	...	...	...	170	26	85
83	166	4.65	53	86	...	...	...	166	25	83
82	163	4.70	53	85	...	...	...	163	25	82
80	159	4.75	52	84	...	...	...	159	24	80
78	156	4.80	51	83	...	...	...	156	24	78
76	153	4.85	51	82	...	...	...	153	23	76
75	149	4.90	50	81	...	...	...	149	23	75
74	146	4.95	50	80	...	...	...	146	22	74
72	143	5.00	49	79	...	...	...	143	22	72
71	140	5.05	49	78	...	...	...	140	21	71
70	137	5.10	48	77	...	...	...	137	21	70
68	134	5.15	47	76	...	...	...	134	21	68
66	131	5.20	46	74	...	...	...	131	20	66
65	128	5.25	46	73	...	...	...	128	20	65

NOTE: Brinnell 128 to 495 with Standard Ball. Brinnell 514 to 601 with Hultgren Ball. Brinnell 627 to 682 with Carbide Ball.

References: ASTM E140-76, ASM Metals Handbook Vol. 1, 8th Edition.

©Tubular Exchanger Manufacturers Association, Inc.

TABLE D-9A
INTERNAL WORKING PRESSURES (PSI)
OF TUBES AT VARIOUS VALUES OF ALLOWABLE STRESS

Tube O.D. Inches	Tube Gage BWG	Allowable Stress (PSI)									
		2,000	4,000	6,000	8,000	10,000	12,000	14,000	16,000	18,000	20,000
1/4	27	269	539	809	1079	1349	1618	1888	2158	2428	2698
	26	305	611	916	1222	1528	1833	2139	2444	2750	3056
	24	378	757	1135	1514	1893	2271	2650	3029	3407	3786
	23	434	869	1304	1739	2173	2608	3043	3478	3913	4347
	22	492	984	1476	1968	2460	2952	3444	3936	4428	4920
	21	570	1140	1711	2281	2852	3422	3992	4563	5133	5704
	20	630	1261	1891	2522	3153	3783	4414	5045	5675	6306
	19	776	1552	2329	3105	3881	4658	5434	6210	6987	7763
	18	929	1859	2789	3719	4648	5578	6508	7438	8368	9297
3/8	24	246	492	738	984	1231	1477	1723	1969	2216	2462
	22	317	635	952	1270	1588	1905	2223	2541	2858	3175
	21	366	732	1099	1465	1831	2198	2564	2930	3297	3663
	20	403	806	1210	1613	2017	2420	2824	3227	3631	4034
	19	492	984	1476	1968	2460	2952	3444	3936	4428	4920
	18	583	1167	1751	2334	2918	3502	4085	4669	5253	5836
	17	706	1412	2118	2824	3530	4236	4942	5648	6354	7060
	16	804	1609	2414	3219	4024	4829	5634	6439	7244	8049
	15	907	1814	2722	3629	4536	5444	6351	7258	8166	9073
	14	1075	2151	3227	4303	5379	6454	7530	8606	9682	10758
1/2	22	234	469	703	938	1172	1407	1641	1876	2110	2345
	20	296	593	889	1186	1483	1779	2076	2372	2669	2966
	19	360	720	1080	1440	1801	2161	2521	2881	3241	3602
	18	425	850	1276	1701	2126	2552	2977	3402	3828	4253
	17	511	1022	1534	2045	2557	3068	3580	4091	4603	5114
	16	580	1160	1741	2321	2901	3482	4062	4642	5223	5803
	15	650	1301	1952	2603	3254	3905	4556	5207	5858	6509
	14	765	1531	2297	3062	3828	4594	5359	6125	6891	7656
	13	896	1792	2688	3584	4481	5377	6273	7169	8066	8962
	12	1056	2112	3168	4224	5281	6337	7393	8449	9505	10562
5/8	20	234	469	703	938	1172	1407	1641	1876	2110	2345
	19	284	568	852	1136	1420	1704	1988	2272	2556	2840
	18	334	669	1003	1338	1672	2007	2342	2676	3011	3345
	17	400	801	1202	1603	2004	2405	2806	3207	3608	4009
	16	453	907	1361	1815	2268	2722	3176	3630	4083	4537
	15	507	1015	1522	2030	2537	3045	3553	4060	4568	5075
	14	594	1188	1783	2377	2971	3566	4160	4754	5349	5943
	13	692	1384	2076	2768	3460	4153	4845	5537	6229	6921
	12	810	1621	2432	3242	4053	4864	5674	6485	7296	8107
	11	907	1814	2722	3629	4536	5444	6351	7258	8166	9073
	10	1035	2070	3105	4140	5175	6210	7246	8281	9316	10351

©Tubular Exchanger Manufacturers Association, Inc.

TABLE D-9A (continued)
INTERNAL WORKING PRESSURES (PSI)
OF TUBES AT VARIOUS VALUES OF ALLOWABLE STRESS

Tube O.D. Inches	Tube Gage BWG	Allowable Stress (PSI)									
		2,000	4,000	6,000	8,000	10,000	12,000	14,000	16,000	18,000	20,000
3/4	20	193	387	581	775	969	1163	1357	1551	1745	1939
	18	275	551	827	1102	1378	1654	1930	2205	2481	2757
	17	329	659	989	1318	1648	1978	2308	2637	2967	3297
	16	372	744	1117	1489	1862	2234	2607	2979	3352	3724
	15	415	831	1247	1663	2079	2495	2911	3327	3743	4159
	14	485	971	1456	1942	2428	2913	3399	3885	4370	4856
	13	563	1127	1691	2255	2818	3382	3946	4510	5074	5637
	12	657	1315	1973	2631	3289	3946	4604	5262	5920	6578
	11	733	1467	2201	2935	3669	4403	5137	5871	6605	7339
	10	833	1667	2501	3335	4169	5003	5836	6670	7504	8338
	9	937	1874	2811	3749	4686	5623	6561	7498	8435	9373
	8	1067	2135	3203	4271	5339	6407	7475	8543	9611	10679
7/8	20	165	330	495	661	826	991	1157	1322	1487	1652
	18	234	469	703	938	1172	1407	1641	1876	2110	2345
	17	279	559	839	1119	1399	1679	1959	2239	2519	2799
	16	315	631	947	1263	1579	1895	2211	2527	2843	3159
	15	352	704	1057	1409	1761	2114	2466	2818	3171	3523
	14	410	821	1231	1642	2052	2463	2874	3284	3695	4105
	13	475	951	1426	1902	2377	2853	3329	3804	4280	4755
	12	553	1106	1660	2213	2767	3320	3874	4427	4980	5534
	11	616	1232	1848	2464	3080	3697	4313	4929	5545	6161
	10	698	1396	2094	2792	3490	4188	4886	5584	6282	6980
	9	782	1564	2347	3129	3912	4694	5477	6259	7042	7824
	8	888	1776	2664	3553	4441	5329	6218	7106	7994	8882
1	20	144	288	432	576	720	864	1008	1152	1296	1440
	18	203	407	611	815	1019	1223	1427	1631	1835	2039
	17	243	486	729	973	1216	1459	1703	1946	2189	2432
	16	274	548	822	1097	1371	1645	1919	2194	2468	2742
	15	305	611	916	1222	1528	1833	2139	2444	2750	3056
	14	355	711	1066	1422	1778	2133	2489	2844	3200	3556
	13	411	822	1233	1645	2056	2467	2878	3290	3701	4112
	12	477	955	1432	1910	2388	2865	3343	3821	4298	4776
	11	530	1061	1592	2123	2654	3185	3716	4247	4778	5309
	10	600	1200	1801	2401	3001	3602	4202	4802	5403	6003
	9	671	1343	2014	2686	3357	4029	4700	5372	6043	6715
	8	760	1520	2281	3041	3801	4562	5322	6082	6843	7603

©Tubular Exchanger Manufacturers Association, Inc.

TABLE D-9A (continued)
INTERNAL WORKING PRESSURES (PSI)
OF TUBES AT VARIOUS VALUES OF ALLOWABLE STRESS

Tube O.D. Inches	Tube Gage BWG	Allowable Stress (PSI)									
		2,000	4,000	6,000	8,000	10,000	12,000	14,000	16,000	18,000	20,000
1 1/4	20	114	229	343	458	572	687	801	916	1031	1145
	18	161	323	485	647	809	971	1133	1295	1456	1618
	16	217	434	651	868	1085	1302	1519	1736	1953	2170
	15	241	483	724	966	1207	1449	1690	1932	2173	2415
	14	280	561	841	1122	1402	1683	1963	2244	2524	2805
	13	323	647	971	1294	1618	1942	2265	2589	2913	3236
	12	374	749	1124	1499	1874	2249	2624	2999	3374	3749
	11	415	831	1247	1663	2079	2495	2911	3327	3743	4159
	10	469	938	1407	1876	2345	2814	3283	3752	4221	4690
	9	523	1046	1569	2092	2615	3138	3662	4185	4708	5231
	8	590	1180	1771	2361	2951	3542	4132	4722	5313	5903
	7	650	1301	1952	2603	3254	3905	4556	5207	5858	6509
1 1/2	14	231	463	694	926	1157	1389	1621	1852	2084	2315
	12	308	617	925	1234	1543	1851	2160	2468	2777	3086
	11	341	683	1025	1367	1709	2051	2393	2735	3076	3418
	10	384	769	1154	1539	1924	2309	2693	3078	3463	3848
	9	428	856	1285	1713	2142	2570	2999	3427	3856	4284
	8	482	964	1447	1929	2412	2894	3377	3859	4342	4824
2	14	171	343	515	686	858	1030	1201	1373	1545	1717
	12	227	455	683	911	1139	1367	1595	1823	2051	2279
	11	252	504	756	1008	1260	1512	1764	2016	2268	2521
	10	283	566	849	1132	1415	1699	1982	2265	2548	2831
	9	314	629	943	1258	1573	1887	2202	2517	2831	3146
	8	353	706	1059	1413	1766	2119	2473	2826	3179	3533
2 1/2	14	136	272	409	545	682	818	954	1091	1227	1364
	12	180	361	542	722	903	1084	1264	1445	1626	1807
	10	224	448	672	896	1120	1344	1568	1792	2016	2240
3	14	113	226	339	452	565	679	792	905	1018	1131
	12	149	299	449	598	748	898	1047	1197	1347	1496
	10	185	370	555	741	926	1111	1297	1482	1667	1852

©Tubular Exchanger Manufacturers Association, Inc.

TABLE D-9B

EXTERNAL WORKING PRESSURES (PSI) OF VARIOUS TUBE MATERIALS

Tube O.D. Inches	Tube Gage BWG	ASME CODE External Pressure Chart and Maximum Temperature								
		CS-1		HA-1			NFC-3		NFC-6	
		300 F	700 F	100 F	400 F	700 F	150 F	400 F	200 F	300 F
1/4	27	1174	772	1128	836	645	450	408	897	801
	26	1332	907	1318	974	750	520	473	1069	953
	24	1625	1175	1690	1245	957	657	602	1410	1254
	23	1853	1374	1960	1443	1108	758	698	1660	1474
	22	2215	1695	2393	1760	1352	922	852	2062	1826
	21	2697	2131	2969	2182	1677	1140	1060	2606	2299
	20	3059	2442	3407	2504	1925	1307	1220	3035	2669
	19	3902	3116	4415	3247	2500	1694	1593	4033	3526
	18	4745	3789	5420	3990	3080	2084	1976	5075	4408
3/8	24	1066	690	1008	749	579	406	367	793	708
	22	1383	952	1382	1020	785	543	495	1127	1005
	21	1578	1131	1629	1201	923	634	581	1354	1205
	20	1729	1263	1810	1333	1024	702	645	1521	1352
	19	2215	1695	2393	1760	1352	922	852	2062	1826
	18	2777	2207	3067	2254	1732	1177	1095	2702	2382
	17	3500	2795	3936	2894	2226	1509	1415	3556	3117
	16	4063	3244	4608	3390	2611	1768	1666	4233	3695
	15	4625	3693	5278	3885	2997	2028	1921	4927	4283
	14	5508	4399	6319	4637	3598	2425	2310	5944	5152
1/2	22	1011	690	948	705	545	383	346	740	660
	20	1293	952	1270	939	723	502	456	1025	914
	19	1554	1131	1599	1178	906	623	570	1326	1180
	18	1816	1263	1915	1410	1083	742	682	1618	1437
	17	2336	1695	2537	1865	1432	976	904	2196	1942
	16	2757	2207	3043	2236	1718	1168	1086	2678	2361
	15	3179	2795	3552	2611	2007	1362	1273	3177	2791
	14	3842	3244	4342	3193	2458	1666	1566	3960	3463
	13	4565	3693	5206	3832	2956	2001	1894	4853	4220
	12	5408	4399	6202	4552	3533	2381	2268	5836	5058
5/8	20	1011	648	948	705	545	383	346	740	660
	19	1237	823	1200	889	685	477	433	961	858
	18	1453	1015	1469	1084	834	575	525	1207	1076
	17	1719	1255	1798	1324	1017	698	640	1510	1342
	16	1974	1481	2106	1549	1190	813	749	1794	1592
	15	2312	1781	2508	1844	1416	965	893	2169	1919
	14	2842	2269	3145	2312	1776	1207	1124	2778	2448
	13	3420	2731	3841	2823	2172	1473	1380	3461	3036
	12	4095	3270	4647	3418	2633	1783	1681	4273	3729
	11	4625	3693	5278	3885	2997	2028	1921	4927	4283
	10	5300	4232	6075	4461	3462	2333	2223	5719	4956
3/4	20	811	504	735	550	428	305	274	557	496
	18	1120	793	1157	857	661	461	418	923	824
	17	1433	997	1445	1066	820	566	516	1185	1056
	16	1602	1153	1659	1223	940	646	591	1382	1230
	15	1779	1308	1870	1377	1058	725	666	1576	1401
	14	2175	1660	2346	1725	1325	904	835	2017	1787
	13	2657	2093	2920	2146	1649	1122	1042	2558	2258
	12	3219	2571	3600	2647	2035	1381	1291	3224	2832
	11	3661	2923	4128	3035	2336	1583	1486	3746	3280
	10	4223	3372	4801	3532	2722	1843	1739	4432	3864
	9	4786	3821	5467	4025	3107	2102	1994	5125	4450
	8	5468	4367	6272	4603	3572	2407	2293	5901	5114

©Tubular Exchanger Manufacturers Association, Inc.

TABLE D-9B (continued)

EXTERNAL WORKING PRESSURES (PSI) OF VARIOUS TUBE MATERIALS

Tube O.D. Inches	Tube Gage BWG	ASME CODE External Pressure Chart and Maximum Temperature								
		CS-1		HA-1			NFC-3		NFC-6	
		300 F	700 F	100 F	400 F	700 F	150 F	400 F	200 F	300 F
7/8	20	663	405	585	441	346	250	224	432	382
	18	1011	648	948	705	545	383	346	740	660
	17	1219	808	1178	873	673	469	425	941	840
	16	1376	946	1373	1014	780	540	492	1119	998
	15	1523	1080	1559	1150	884	609	556	1290	1149
	14	1758	1289	1845	1358	1043	715	657	1553	1380
	13	2112	1604	2270	1670	1282	875	808	1947	1725
	12	2594	2033	2843	2090	1605	1092	1014	2484	2193
	11	2973	2374	3303	2428	1866	1267	1182	2933	2581
	10	3454	2759	3882	2854	2195	1488	1395	3502	3071
	9	3936	3143	4456	3277	2524	1710	1609	4076	3562
	8	4522	3611	5155	3794	2927	1981	1874	4800	4175
1	20	553	335	478	364	287	211	188	345	303
	18	861	538	785	587	456	324	292	600	534
	17	1053	679	993	738	571	400	362	780	696
	16	1194	788	1150	852	657	458	415	916	818
	15	1332	907	1618	974	750	520	473	1069	953
	14	1536	1092	1576	1162	893	615	562	1305	1162
	13	1760	1291	1848	1361	1045	716	658	1556	1382
	12	2125	1615	2286	1681	1291	881	814	1961	1738
	11	2456	1910	2680	1970	1513	1030	955	2330	2059
	10	2878	2298	3189	2344	1801	1224	1140	2821	2485
	9	3300	2635	3696	2717	2090	1418	1326	3319	2914
	8	3812	3044	4307	3167	2438	1652	1553	3924	3432
1 1/4	20	397	242	334	259	208	157	140	230	199
	18	646	394	568	429	337	244	219	418	370
	16	926	585	855	637	494	349	315	660	588
	15	1044	673	984	731	566	397	359	772	689
	14	1221	809	1181	874	675	470	426	944	842
	13	1408	975	1413	1043	803	554	506	1156	1031
	12	1611	1162	1672	1232	946	650	596	1393	1239
	11	1779	1308	1870	1377	1058	725	666	1576	1401
	10	2071	1567	2221	1634	1255	857	791	1901	1685
	9	2408	1867	2623	1928	1481	1009	934	2276	2013
	8	2818	2245	3116	2290	1760	1196	1113	2749	2423
	7	3179	2539	3552	2611	2007	1362	1273	3177	2791
1 1/2	14	997	638	932	694	537	378	341	727	648
	12	1345	918	1334	986	759	525	478	1084	966
	11	1482	1042	1507	1111	854	589	538	1241	1106
	10	1655	1197	1720	1267	973	668	613	1437	1279
	9	1828	1342	1930	1421	1091	747	687	1632	1449
	8	2155	1642	2322	1707	1311	895	827	1995	1767
2	14	698	428	620	466	365	263	236	461	409
	12	980	624	913	680	526	371	335	710	633
	11	1093	710	1038	771	596	417	377	819	731
	10	1233	819	1195	885	682	475	431	956	854
	9	1370	941	1366	1009	777	537	489	1113	992
	8	1527	1084	1564	1153	887	610	558	1294	1153
2 1/2	14	511	309	439	335	266	196	175	313	274
	12	745	459	667	501	391	280	252	501	445
	10	961	610	892	646	515	363	327	692	617
3	14	390	237	328	254	204	154	137	225	194
	12	583	354	507	385	303	221	198	369	325
	10	768	475	692	518	404	289	259	520	462

©Tubular Exchanger Manufacturers Association, Inc.

Notes:

CS-1 applies to carbon steel, typical materials are SA 214 and SA 179. The chart is conservative when used for ASME CS-2 chart materials such as SA 334 GR6, and all CS-3, 4 and 5 materials.

HA-1 applies to Stainless 304. The chart is conservative when used for HA-2 materials such as Stainless 316. The chart cannot be used for grades 304L and 316L.

NFC-3 applies only to 90/10 cupro-nickel.

NFC-6 applies only to the following copper materials: SB75 / 111, alloys C10200, C12000, C12200, C14200. Materials must be H55 or H80 temper, listed in ASME Sec. II Part D, Table 1B.

These charts apply when L/D > 50.

 ©Tubular Exchanger Manufacturers Association, Inc.

TABLE D-10
MODULI OF ELASTICITY

PART 1 - MODULI OF ELASTICITY OF FERROUS MATERIALS

MATERIAL / TEMPERATURE (°F)	MODULUS OF ELASTICITY (E) FOR GIVEN TEMPERATURE (PSI X 10^6)																	
	-325	-200	-100	70	200	300	400	500	600	700	800	900	1000	1100	1200	1300	1400	1500
Carbon Steel with C ≤ 0.30%	31.4	30.8	30.3	29.4	28.8	28.3	27.9	27.3	26.5	25.5	24.2	22.5	20.4	18.0				
Carbon Steel with C > 0.30%	31.2	30.6	30.1	29.2	28.6	28.1	27.7	27.1	26.4	25.3	24.0	22.3	20.2	17.9	15.4			
C-Mo and Mn Steels:	31.1	30.5	30.0	29.0	28.5	28.0	27.6	27.0	26.3	25.3	23.9	22.2	20.1	17.8	15.3			
C-¼Mo; Mn-½Mo; Mn-½Ni-V; C-½Mo; Mn-½Mo-¼Ni; Mn-V; Mn-¼Mo; Mn-½Mo-½Ni																		
Ni Steels:	29.6	29.0	28.6	27.8	27.1	26.7	26.2	25.7	25.1	24.6	23.9	23.2	22.4	21.5	20.4	19.2	17.7	
¾Cr-½Ni-Cu; ¾Ni-½Mo-Cr-V; 2½Ni; ¾Cr-¾Ni-Cu-Al; ¾Ni-1Mo-¾Cr; 2¾Ni-1½Cr-½Mo-V; ½Ni-½Cr-¼Mo-V; 1Ni-½Cr-½Mo; 3½Ni; ½Ni-½Mo-V; 1¼Ni-1Cr-½Mo; 3½Ni-1¾Cr-½Mo-V; ¾Ni-½Cr-½Mo-V; 1¾Ni-¾Cr-¼Mo; 4Ni-1½Cr-½Mo-V; ¾Ni-½Cu-Mo; 2Ni-1½Cr-¼Mo-V; ¾Ni-½Mo-⅓Cr-V; 2Ni-1Cu																		
½ to 2 Cr Steels:	31.6	30.9	30.5	29.6	29.0	28.5	28.0	27.4	26.9	26.2	25.6	24.8	23.9	23.0	21.8	20.5	18.9	
½Cr-⅙Mo-V; 1Cr-½Mo; 1¾Cr-½Mo-Ti; ½Cr-¼Mo-Si; 1Cr-½Mo-V; 2Cr-½Mo; ½Cr-½Mo; 1¼Cr-½Mo; 1Cr-⅙Mo; 1¼Cr-½Mo-Si																		
2¼ to 3 Cr Steels:	32.6	31.9	31.4	30.6	29.9	29.4	28.8	28.3	27.7	27.0	26.3	25.6	24.7	23.7	22.5	21.1	19.4	
2¼Cr-1Mo; 3Cr-1Mo; 3Cr-1Mo-¼V-Cb-Ca; 3Cr-1Mo-¼V-Ti-B																		
5 to 9 Cr Steels:	33.0	32.4	31.9	31.0	30.3	29.7	29.2	28.6	28.1	27.5	26.9	26.2	25.4	24.4	23.3	22.0	20.5	
5Cr-½Mo; 5Cr-½Mo-Ti; 9Cr-Mo; 5Cr-½Mo-Si; 7Cr-½Mo																		
Cr Steels:	31.2	30.7	30.2	29.2	28.4	27.9	27.3	26.8	26.2	25.5	24.5	23.2	21.5	19.2	16.5			
12Cr-Al; 13Cr; 15Cr; 17Cr																		
Austenitic Steels:	30.3	29.7	29.2	28.3	27.5	27.0	26.4	25.9	25.3	24.8	24.1	23.5	22.8	22.0	21.2	20.3	19.2	18.1
16Cr-12Ni-2Mo; 18Cr-8Ni-S; 18Cr-18Ni-2Si; 16Cr-12Ni-2Mo-N; 18Cr-8Ni-Se; 21Cr-6Ni-9Mn; 18Cr-3Ni-13Mn; 18Cr-10Ni-Cb; 22Cr-13Ni-5Mn; 18Cr-8Ni; 18Cr-10Ni-Ti; 23Cr-12Ni; 18Cr-8Ni-N; 18Cr-13Ni-3Mo; 25Cr-20Ni																		
13Cr-8Ni-2Mo (S13800); XM-13; PH13-8Mo	31.5	30.9	30.3	29.4	28.7	28.1	27.5	26.9	26.3	25.7	25.0	24.4						
15Cr-5Ni-3Mo (S15500); XM-12; 15-5PH; 17Cr-4Ni-4Cu (S17400); Gr 630; 17-4PH	30.5	29.9	29.4	28.5	27.8	27.2	26.7	26.1	25.5	24.9	24.3	23.7						
15Cr-6Ni-Cu-Mo (S45000); XM-25; 17Cr-7Ni-1Al (S17700); Gr 631; 17-7PH	31.6	31.0	30.4	29.5	28.8	28.2	27.6	27.0	26.4	25.8	25.1	24.5						
25Ni-15Cr-2Ti (S66286); Gr 660; A-286 S.S	31.0	30.6	30.2	29.2	28.5	27.9	27.3	26.7	26.1	25.5	24.9	24.2						
Duplex Stainless Steels:			30.2	29.0	28.2	27.5	27.0	26.4	26.0	25.5	25.1							
18Cr-5Ni-3Mo; 24Cr-10Ni-4Mo-N; 25Cr-7Ni-3Mo-W-Cu-N; 22Cr-2Ni-Mo-N; 25Cr-5Ni-3Mo-2Cu; 25Cr-7Ni-4Mo-N; 22Cr-5Ni-3Mo-N; 25Cr-6Ni-Mo-N; 25Cr-7.5Ni-3.5Mo-N-Cu-W; 23Cr-4Ni-Mo-Cu-N; 25Cr-6.5Ni-3Mo-N; 29Cr-6.5Ni-2Mo-N																		
High-Silicon Austenitic Stainless Steels:	27.8	27.1	26.6	25.8	25.1	24.6	24.1	23.6	23.1	22.6	22.1	21.6	21.1	20.6	20.1	19.6	19.1	18.6
17.5Cr-17.5Ni-5.3Si; 18Cr-8Ni-4Si-N; 18Cr-20Ni-5.5Si UNS S38815																		

To convert to metric (SI units), multiply E from table by 6.895 X 10^6 kPa

©Tubular Exchanger Manufacturers Association, Inc.

TABLE D-10 (continued)

PART 2A - MODULI OF ELASTICITY OF NONFERROUS MATERIALS

MATERIAL \ TEMPERATURE (°F)	MODULUS OF ELASTICITY (E) FOR GIVEN TEMPERATURE (PSI X 10^6)																	
	-325	-200	-100	70	200	300	400	500	600	700	800	900	1000	1100	1200	1300	1400	1500
C93700 (High Leaded Tin Bronze)	11.6	11.4	11.3	11.0	10.7	10.5	10.3	10.1	9.8	9.4								
C83600 (Leaded Red Brass) C92200 (Navy "M", Bronze)	14.8	14.6	14.4	14.0	13.7	13.4	13.2	12.9	12.5	12.0								
C28000, C36500 (Muntz) C46400 (Naval Brass) C95200, C95400 (Al Bronze) C65500 (Si Bronze) C66100	15.9	15.6	15.4	15.0	14.6	14.4	14.1	13.8	13.4	12.8								
C44300, C44400, C44500 (Admiralty Brass) C64200, C68700 (Al Bronze)	16.9	16.7	16.4	16.0	15.6	15.3	15.0	14.7	14.2	13.7								
Copper: C10200, C10400, C10500, C10700, C11000 Copper: C12000, C12200, C12300, C12500, C14200 C23000 (Red Brass) C61000 (Bronze) C61400 (Al-Bronze) C65100 (Si Bronze) C70400 (95-5 Cu-Ni)	18.0	17.7	17.5	17.0	16.6	16.3	16.0	15.6	15.1	14.5								
C19400 C60800, C63000 (Al-Bronze)	18.5	18.2	18.0	17.5	17.1	16.8	16.5	16.1	15.6	15.0								
C70600 (90-10 Cu-Ni)	19.0	18.7	18.5	18.0	17.6	17.3	16.9	16.5	16.0	15.4								
C97600	20.1	19.8	19.6	19.0	18.5	18.2	17.9	17.5	16.9	16.2								
C71000 (80-20 Cu-Ni)	21.2	20.8	20.6	20.0	19.5	19.2	18.8	18.4	17.8	17.1								
C71500 (70-30 Cu-Ni)	23.3	22.9	22.6	22.0	21.5	21.1	20.7	20.2	19.6	18.8								
Aluminum: A03560, A95083, A95086, A95456	11.4	11.1	10.8	10.3	9.8	9.5	9.0	8.1										
Aluminum: A24430, A91060, A91100, A93003, A93004 Aluminum: A96061, A96063	11.1	10.8	10.5	10.0	9.6	9.2	8.7	8.1										
Aluminum: A92014, A92024	11.7	11.4	11.1	10.6	10.2	9.7	9.2	8.6										
Aluminum: A95052, A95154, A95254, A95454, A95652	11.3	11.0	10.7	10.2	9.7	9.4	8.9	8.3										
Titanium: R50250 (Gr. 1) R50400 (Gr. 2 & 2H) Titanium: R50550 (Gr. 3) R52400 (Gr. 7 & 7H) Titanium: R52250 (Gr. 11) R53400 (Gr. 12) Titanium: R52402 (Gr. 16 & 16H) R52252 (Gr. 17) Titanium: R52404 (Gr. 26 & 26H) R52254 (Gr. 27)	...	...	...	15.5	15.0	14.6	14.0	13.3	12.6	11.9	11.2							
Titanium: R56320 (Gr. 9) R536323 (Gr. 28)	...	...	...	15.9	15.3	14.6	13.9	13.2	12.4	...	...							
Titanium: R54250 (Gr. 38)	...	...	...	15.3	14.8	13.8	13.0	12.3	11.9	11.4	10.7							
R60702 (Zirconium 702)				14.4	13.5	12.6	11.7	10.9	10.1	9.3	8.2							
R60705 (Zirconium 705)				13.7	13.1	12.7	12.2	11.7	11.3	10.8	10.4							

To convert to metric (SI units), multiply E from table by 6.895 X 10^6 kPa

©Tubular Exchanger Manufacturers Association, Inc.

TABLE D-10 (continued)

PART 2B - MODULI OF ELASTICITY OF NONFERROUS MATERIALS

MATERIAL / TEMPERATURE (°F)	MODULUS OF ELASTICITY (E) FOR GIVEN TEMPERATURE (PSI X 10^6)																	
	-325	-200	-100	70	200	300	400	500	600	700	800	900	1000	1100	1200	1300	1400	1500
N02200 (Nickel) N02201 (Nickel)	32.2	31.4	30.9	30.0	29.4	28.9	28.5	28.1	27.6	27.2	26.7	26.2	25.7	25.1	24.5	23.8	23.1	22.4
N04400 (Monel, Alloy 400) N04405 (Alloy 405)	27.8	27.2	26.8	26.0	25.5	25.1	24.7	24.3	23.9	23.6	23.1	22.7	22.2	21.7	21.2	20.6	20.0	19.4
N06002 (Alloy X)	30.5	29.9	29.3	28.5	27.9	27.5	27.1	26.7	26.2	25.8	25.4	24.9	24.3	23.8	23.2	22.5	21.9	21.2
N06007 (Alloy G4)	29.8	29.1	28.6	27.8	27.2	26.8	26.4	26.0	25.6	25.2	24.7	24.3	23.8	23.2	22.6	22.0	21.4	20.7
N06022 (Alloy C-22)	32.1	31.3	30.8	29.9	29.3	28.8	28.4	28.0	27.5	27.1	26.6	26.1	25.6	25.0	24.4	23.7	23.0	22.3
N06030 (Alloy G-30)	31.5	30.7	30.2	29.3	28.7	28.2	27.8	27.4	27.0	26.5	26.1	25.6	25.1	24.5	23.9	23.2	22.5	21.9
N06045 (Alloy 45)	30.0	29.3	28.8	28.0	27.4	27.0	26.6	26.2	25.8	25.4	24.9	24.4	23.9	23.4	22.8	22.2	21.6	20.9
N06059 (Alloy 59) N06686 (Alloy 686)	32.7	31.9	31.3	30.5	29.9	29.4	29.0	28.5	28.1	27.6	27.1	26.6	26.0	25.4	24.8	24.1	23.4	22.8
N06230 (Alloy 230)	32.8	32.0	31.5	30.6	29.9	29.5	29.0	28.6	28.2	27.7	27.2	26.7	26.1	25.5	24.9	24.2	23.6	22.8
N06455 (Alloy C4)	32.0	31.2	30.7	29.8	29.2	28.7	28.3	27.9	27.4	27.0	26.5	26.0	25.5	24.9	24.3	23.6	22.9	22.2
N06600 (Inconel, Alloy 600)	33.3	32.5	31.9	31.0	30.3	29.9	29.4	29.0	28.6	28.1	27.6	27.1	26.5	25.9	25.3	24.6	23.9	23.1
N06617 (Alloy 617)	...	...	...	29.2	28.4	28.0	27.7	27.4	27.0	26.5	26.0	25.5	24.9	24.3	23.8	23.2	22.5	21.8
N06625 (Inconel, Alloy 625)	32.2	31.4	30.9	30.0	29.4	28.9	28.5	28.1	27.6	27.2	26.7	26.2	25.7	25.1	24.5	23.8	23.1	22.4
N06690 (Alloy 690)	32.6	31.8	31.2	30.3	29.6	29.2	28.8	28.3	27.9	27.5	27.0	26.5	25.9	25.3	24.7	24.0	23.3	22.6
N07718 (Alloy 718)	31.0	30.5	29.9	28.9	28.3	27.9	27.5	27.2	26.8	26.3	25.8	25.2	24.7	24.2	...	...	...	...
N07750 (Alloy X-750)	33.2	32.6	31.9	30.9	30.3	29.8	29.4	29.1	28.6	28.2	27.6	27.0	26.4	25.8	25.3	...	...	...
N08020 (Alloy 20) N08330 (Alloy 330) N08825 (Incoloy-Alloy 825)	30.0	29.3	28.8	28.0	27.4	27.0	26.6	26.2	25.8	25.4	24.9	24.4	23.9	23.4	22.8	22.2	21.6	20.9
N08031 (Alloy 31)	30.7	30.1	29.5	28.7	28.1	27.7	27.2	26.8	26.4	26.0	25.5	25.0	24.5	24.0	23.4	22.8	22.1	21.4
N08367 (AL-6XN)				28.3	27.4		26.1		24.8		23.4		22.1					
N08800 (Incoloy-Alloy 800) N08810 (Incoloy-Alloy 800H) N08801 (Incoloy-Alloy 801)	30.5	29.9	29.3	28.5	27.9	27.5	27.1	26.7	26.2	25.8	25.4	24.9	24.4	23.8	23.2	22.6	21.9	21.2
N10001 (Alloy B)	33.4	32.6	32.0	31.1	30.4	30.0	29.5	29.1	28.7	28.2	27.7	27.2	26.6	26.0	25.3	24.6	23.9	23.2
N10003 (Alloy N)	34.0	33.2	32.6	31.7	31.0	30.5	30.1	29.6	29.2	28.7	28.2	27.7	27.1	26.5	25.8	25.1	24.4	23.6
N10242 (Alloy 242)	35.6	34.8	34.2	33.2	32.5	32.0	31.5	31.0	30.5	30.0	29.5	29.0	28.4	27.7	27.1	26.3	25.6	24.8
N10276 (Alloy C-276)	32.0	31.2	30.7	29.8	29.2	28.7	28.3	27.9	27.4	27.0	26.5	26.0	25.5	24.9	24.3	23.6	22.9	22.2
N10629 (Alloy B4) N10665 (Alloy B2) N10675 (Alloy B3)	33.7	32.9	32.3	31.4	30.7	30.2	29.8	29.3	28.9	28.4	27.9	27.4	26.8	26.2	25.6	24.9	24.2	23.4
N12160 (Alloy D-205)	32.8	32.0	31.5	30.6	29.9	29.5	29.0	28.6	28.2	27.7	27.2	26.7	26.1	25.5	24.9	24.2	23.6	22.8
R20033 (Alloy 33)	30.4	29.6	29.1	28.3	27.7	27.3	26.9	26.5	26.1	25.7	25.2	24.7	24.2	23.6	23.1	22.4	21.8	21.1

To convert to metric (SI units), multiply E from table by 6.895 X 10^6 kPa

©Tubular Exchanger Manufacturers Association, Inc.

TABLE D-11
MEAN COEFFICIENTS OF THERMAL EXPANSION

TEMPERATURE (°F)	VALUE SHOWN IN TABLE IS THE MEAN COEFFICIENT OF THERMAL EXPANSION FROM 70 °F TO THE TEMPERATURE INDICATED (X 10^{-6} in/in/°F)								
	Group 1 Carbon & Low Alloy Steels	Group 2 Low Alloy and Duplex Steels	5Cr-1Mo 29Cr-7Ni-2Mo-N Steels	9Cr-1Mo Steels	5Ni-1/4Mo Steels	8Ni & 9Ni Steels	12Cr 12Cr-1Al 13Cr 13Cr-4Ni Steels	15Cr 17Cr Steels	27Cr Steels
70	6.4	7.0	6.4	5.8	6.2	5.5	5.9	5.3	5.0
100	6.5	7.1	6.5	5.9	6.3	5.6	6.0	5.4	5.1
150	6.6	7.2	6.6	5.9	6.4	5.8	6.1	5.5	5.1
200	6.7	7.3	6.7	6.0	6.5	5.9	6.2	5.5	5.2
250	6.8	7.3	6.8	6.1	6.6	6.1	6.2	5.6	5.2
300	6.9	7.4	6.9	6.2	6.7	6.2	6.3	5.7	5.2
350	7.0	7.5	6.9	6.2	6.8	6.3	6.4	5.7	5.3
400	7.1	7.6	7.0	6.3	6.8	6.4	6.4	5.8	5.3
450	7.2	7.6	7.0	6.3	6.9	6.5	6.4	5.8	5.3
500	7.3	7.7	7.1	6.4	7.0	6.6	6.5	5.9	5.4
550	7.3	7.8	7.1	6.5	7.1	6.6	6.5	6.0	5.4
600	7.4	7.8	7.2	6.5	7.1	6.7	6.5	6.0	5.4
650	7.5	7.9	7.2	6.6	7.2	6.7	6.6	6.0	5.5
700	7.6	7.9	7.2	6.6	7.3	6.8	6.6	6.1	5.5
750	7.7	8.0	7.3	6.7	7.3	6.8	6.6	6.1	5.5
800	7.8	8.0	7.3	6.7	7.4	6.9	6.7	6.2	5.6
850	7.9	8.1	7.4	6.8	7.5	6.9	6.7	6.2	5.6
900	7.9	8.1	7.4	6.8	7.5	7.0	6.7	6.2	5.7
950	8.0	8.2	7.4	6.9	7.6	7.0	6.8	6.3	5.7
1000	8.1	8.2	7.5	6.9	7.6	7.0	6.8	6.3	5.7
1050	8.1	8.3	7.5	7.0	7.7	...	6.8	6.3	5.8
1100	8.2	8.3	7.6	7.0	7.8	...	6.8	6.4	5.8
1150	8.3	8.3	7.6	7.1	7.8	...	6.9	6.4	5.8
1200	8.3	8.4	7.6	7.1	7.9	...	6.9	6.4	5.9
1250	8.4	8.4	7.7	7.2	...	...	6.9	6.4	5.9
1300	8.4	8.4	7.7	...	...	...	6.9	6.5	5.9
1350	...	8.5	7.7	...	...	...	7.0	6.5	6.0
1400	...	8.5	7.8	...	...	...	7.0	6.5	6.0
1450	...	8.5	...	...	...	...	7.0	6.6	6.0
1500	...	8.5	...	...	...	...	7.0	6.6	6.1

Group 2: Low Alloy and Duplex Steels

Mn-¼Mo	Mn-½Mo-¼Ni	Mn-½Mo-¾Ni	18Cr-5Ni-3Mo-N	22Cr-5Ni-3Mo-N
Mn-½Mo	Mn-½Mo-½Ni	Mn-V	22Cr-2Ni-Mo-N	23Cr-4Ni-Mo-Cu
				25Cr-7Ni-4Mo-N

Group 1: Carbon Steels & Low Alloy Steels

Carbon Steel	C-Mn-Si-Cb	C-Mn-Ti	C-Si-Ti	C-¼Mo	C-½Mo
C-Mn-Cb	C-Mn-Si-V				
½Ni-½Cr-¼Mo	¾Ni-½Cu-Mo	¾Ni-1Mo-¾Cr	1¾Ni-¾Cr-¼Mo	2Ni-1½Cr-¼Mo-V	3½Ni
½Ni-½Cr-¼Mo-V	¾Ni-½Mo-⅓Cr-V	1Ni-½Cr-½Mo	2Ni-¾Cr-¼Mo	2½Ni	3½Ni-1¾Cr-½Mo-V
½Ni-½Mo-V	¾Ni-½Mo-Cr-V	1¼Ni-1Cr-½Mo	2Ni-¾Cr-⅓Mo	2¾Ni-1½Cr-½Mo-V	4Ni-1½Cr-½Mo-V
¾Ni-½Cr-½Mo-V					
½Cr-⅕Mo	½Cr-½Mo	1Cr-⅕Mo	1Cr-½Mo-V	1¾Cr-½Mo-Cu	2¼Cr-1Mo
½Cr-⅕Mo-V	¾Cr-½Ni-Cu	1Cr-⅕Mo-Si	1¼Cr-½Mo	1¾Cr-½Mo-Ti	3Cr-1Mo
½Cr-¼Mo-Si	¾Cr-¾Ni-Cu-Al	1Cr-½Mo	1¼Cr-½Mo-Si	2Cr-½Mo	3Cr-1Mo-¼V-Cb-Ca
					3Cr-1Mo-¼V-Ti-B

To convert to metric (SI units), multiply table value by 1.8 to convert to mm/mm/°C

©Tubular Exchanger Manufacturers Association, Inc.

TABLE D-11 (continued)

MEAN COEFFICIENTS OF THERMAL EXPANSION

TEMPERATURE (°F)	VALUE SHOWN IN TABLE IS THE MEAN COEFFICIENT OF THERMAL EXPANSION FROM 70 °F TO THE TEMPERATURE INDICATED (X 10 $^{-6}$ in/in/°F)								
	Group 3 S. Steels	Group 4 S. Steels	N02200 N02201 (Nickel)	N04400 N04405 (Monel)	N06002 (Alloy X)	N06007 (Alloy G4)	N06022 (Alloy C-22)	N06030 (Alloy G-30)	N06045 (Alloy 45)
70	8.5	8.2	6.6	7.7	7.3	7.4	6.9	6.7	6.1
100	8.6	8.2	6.8	7.8	7.4	7.4	6.9	6.8	6.4
150	8.8	8.4	7.0	7.9	7.4	7.5	6.9	7.0	6.8
200	8.9	8.5	7.2	8.1	7.5	7.5	6.9	7.1	7.1
250	9.1	8.6	7.4	8.2	7.6	7.5	6.9	7.3	7.4
300	9.2	8.7	7.5	8.3	7.6	7.6	6.9	7.4	7.7
350	9.4	8.8	7.6	8.4	7.7	7.6	6.9	7.6	7.8
400	9.5	8.9	7.7	8.5	7.7	7.7	6.9	7.7	8.0
450	9.6	9.0	7.8	8.6	7.8	7.7	6.9	7.8	8.1
500	9.7	9.1	7.9	8.7	7.8	7.8	7.0	7.9	8.2
550	9.8	9.1	8.0	8.7	7.9	7.8	7.0	8.0	8.3
600	9.9	9.2	8.0	8.8	7.9	7.9	7.0	8.0	8.3
650	9.9	9.2	8.1	8.8	8.0	8.0	7.1	8.1	8.4
700	10.0	9.3	8.2	8.9	8.1	8.1	7.2	8.2	8.4
750	10.0	9.3	8.2	8.9	8.1	8.2	7.2	8.2	8.5
800	10.1	9.4	8.3	8.9	8.2	8.3	7.3	8.3	8.5
850	10.2	9.4	8.4	9.0	8.3	8.4	7.4	8.4	8.6
900	10.2	9.5	8.4	9.0	8.3	8.5	7.5	8.4	8.7
950	10.3	9.6	8.5	9.0	8.4	8.6	7.6	8.5	8.7
1000	10.3	9.6	8.5	9.1	8.5	8.7	7.7	8.6	8.8
1050	10.4	9.7	8.6	9.1	8.6	8.8	7.8	8.7	8.9
1100	10.4	9.7	8.6	9.1	8.6	8.8	7.9	8.7	8.9
1150	10.5	9.8	8.7	9.1	8.7	8.9	8.0	8.8	9.0
1200	10.6	9.8	8.7	9.2	8.8	9.0	8.1	8.9	9.1
1250	10.6	9.9	8.8	9.2	8.8	9.0	8.2	8.9	9.2
1300	10.7	9.9	8.8	9.2	8.9	9.1	8.3	8.9	9.2
1350	10.7	10.0	8.9	9.2	9.0	9.2	8.4	8.9	9.3
1400	10.8	10.1	8.9	9.3	9.0	9.2	8.5	8.9	9.4
1450	10.8	10.1	...	9.3	9.1	9.3	8.6	...	9.4
1500	10.8	10.2	...	9.3	9.2	9.4	8.7	...	9.5
1550	...	...	...	...	...	...	...	...	...
1600	...	...	...	...	...	...	...	...	...
1650	...	...	...	...	...	...	...	...	...

Group 4: Austenitic Stainless Steels

29Ni-20Cr-3Cu-2Mo (CN7M)
20Cr-18Ni-6Mo (F44)
22Cr-13Ni-5Mn (XM-19)
23Cr-12Ni (309, 309S, 309H, 309Cb)
25Cr-12Ni (CH8, CH20)
25Cr-20Ni (310, 310S, 310H, 310Cb)
25Cr-20Ni-2Mo
31Ni-31Fe-29Cr-Mo (N08028)
44Fe-25Ni-21Cr-Mo (N08904)

Group 3: Austenitic Stainless Steels

16Cr-12Ni-2Mo (316, 316L)
16Cr-12Ni-2Mo-N (316N)
16Cr-12Ni-2Mo-Ti (316Ti)
18Cr-8Ni (304, 304H, 304L)
18Cr-8Ni-N (304N, 304LN)
18Cr-10Ni-Cb (347, 347H, 348, 348H)
18Cr-10Ni-Ti (321, 321H)
18Cr-11Ni (305)
18Cr-13Ni-3Mo (317, 317L)
18Cr-18Ni-2Si (XM-15)
19Cr-9Ni-Mo-W (CF10)
21Cr-11Ni-N (F45)

To convert to metric (SI units), multiply table value by 1.8 to convert to mm/mm/°C

©Tubular Exchanger Manufacturers Association, Inc.

TABLE D-11 (continued)

MEAN COEFFICIENTS OF THERMAL EXPANSION

TEMPERATURE (°F)	VALUE SHOWN IN TABLE IS THE MEAN COEFFICIENT OF THERMAL EXPANSION FROM 70 °F TO THE TEMPERATURE INDICATED (X 10 $^{-6}$ in/in/°F)								
	N06059 (Alloy 59) N06686 INCONEL 686	N06230 (Alloy 230)	N06455 (Alloy C4)	N06600 (Inconel 600)	N06625 (Inconel 625)	N06690 (Alloy 690)	N07718 (Alloy 718)	N07750 (Alloy X-750)	N08031 (Alloy 31)
70	6.5	6.9	5.8	6.8	6.7	7.7	7.1	6.7	7.7
100	6.5	6.9	5.9	6.9	6.8	7.8	7.1	6.8	7.7
150	6.5	6.9	6.0	7.0	7.0	7.8	7.2	6.9	7.8
200	6.6	7.0	6.2	7.1	7.1	7.9	7.2	7.0	7.9
250	6.6	7.0	6.3	7.2	7.2	7.9	7.3	7.1	8.0
300	6.7	7.1	6.4	7.3	7.2	7.9	7.3	7.2	8.0
350	6.7	7.1	6.5	7.4	7.3	8.0	7.4	7.3	8.1
400	6.8	7.2	6.7	7.5	7.3	8.0	7.5	7.4	8.2
450	6.8	7.2	6.8	7.6	7.3	8.1	7.5	7.4	8.3
500	6.9	7.3	6.9	7.6	7.4	8.1	7.6	7.5	8.3
550	6.9	7.3	7.0	7.7	7.4	8.2	7.6	7.5	8.4
600	7.0	7.4	7.0	7.8	7.4	8.2	7.7	7.5	8.4
650	7.0	7.4	7.1	7.9	7.4	8.3	7.7	7.6	8.5
700	7.0	7.5	7.2	7.9	7.5	8.3	7.8	7.6	8.5
750	7.0	7.6	7.2	8.0	7.5	8.3	7.8	7.6	8.6
800	7.1	7.6	7.3	8.0	7.6	8.3	7.9	7.7	8.6
850	7.1	7.7	7.3	8.1	7.6	...	7.9	...	8.7
900	7.1	7.7	7.3	8.2	7.7	...	8.0	...	8.7
950	7.2	7.8	7.4	8.2	7.8	...	8.0	...	8.7
1000	7.2	7.9	7.4	8.3	7.9	...	8.1	...	8.8
1050	7.2	7.9	7.4	8.4	7.9	...	8.1	...	8.8
1100	7.2	8.0	7.5	8.4	8.0	...	8.2	...	8.8
1150	...	8.0	7.5	8.5	8.1	...	...	...	...
1200	...	8.1	7.5	8.6	8.2	...	...	...	...
1250	...	8.1	7.5	8.6	8.3	...	...	...	...
1300	...	8.2	7.6	8.7	8.4	...	...	...	...
1350	...	8.2	7.6	8.8	8.4	...	...	...	...
1400	...	8.3	7.6	8.9	8.5	...	...	...	...
1450	...	8.3	7.6	9.0	8.6	...	...	...	...
1500	...	8.4	7.6	9.0	8.7	...	...	...	...
1550	...	...	...	...	...	...	...	...	...
1600	...	...	...	...	...	...	...	...	...
1650	...	...	...	...	...	...	...	...	...

To convert to metric (SI units), multiply table value by 1.8 to convert to mm/mm/°C

 ©Tubular Exchanger Manufacturers Association, Inc.

TABLE D-11 (continued)

MEAN COEFFICIENTS OF THERMAL EXPANSION

TEMPERATURE (°F)	VALUE SHOWN IN TABLE IS THE MEAN COEFFICIENT OF THERMAL EXPANSION FROM 70 °F TO THE TEMPERATURE INDICATED (X 10^{-6} in/in/°F)								
	N08330 (Alloy 330)	N08367 (AL-6XN)	N08800 N08801 N08810 N08811 (Incoloy 800, 800H, 801)	N08825 (Incoloy 825)	N10001 (Alloy B)	N10003 (Alloy N)	N10242 (Alloy 242)	N10276 (Alloy C-276)	N10629 (Alloy B4)
70	8.1		7.9	7.5	6.0	6.2	5.8	6.0	5.5
100	8.1		8.0	7.5	6.1	6.2	5.8	6.1	5.5
150	8.2		8.2	7.6	6.2	6.3	5.9	6.2	5.6
200	8.3	8.5	8.4	7.7	6.3	6.4	6.0	6.3	5.7
250	8.4		8.5	7.8	6.3	6.5	6.1	6.4	5.8
300	8.5		8.6	7.9	6.3	6.6	6.1	6.5	5.9
350	8.5		8.7	7.9	6.4	6.6	6.2	6.6	5.9
400	8.6	8.6	8.8	8.0	6.4	6.7	6.3	6.7	6.0
450	8.7		8.9	8.0	6.4	6.7	6.4	6.8	6.0
500	8.7		8.9	8.1	6.4	6.8	6.5	6.9	6.1
550	8.8		9.0	8.1	6.5	6.8	6.5	7.0	6.1
600	8.8	8.8	9.0	8.2	6.5	6.9	6.6	7.1	6.2
650	8.9		9.1	8.3	6.5	6.9	6.6	7.1	6.2
700	9.0		9.1	8.3	6.6	7.0	6.6	7.2	6.3
750	9.0	8.9	9.2	8.4	6.6	7.0	6.7	7.3	6.3
800	9.1		9.2	8.4	6.7	7.1	6.7	7.4	6.4
850	...		9.3	...	6.7	...	6.7	7.4	6.4
900	...		9.3	...	6.8	...	6.7	7.5	6.4
950	...	9.1	9.4	...	6.9	...	6.7	7.5	6.5
1000	...		9.4	...	6.9	...	6.8	7.6	6.5
1050	...		9.5	...	7.0	...	6.8	7.7	6.5
1100	...	9.3	9.5	...	7.1	...	6.8	7.7	6.5
1150	...		9.6	...	7.1	...	6.9	7.8	6.6
1200	...		9.6	...	7.2	...	7.0	7.8	...
1250	...		9.7	...	7.3	...	7.1	7.9	...
1300	...	9.5	9.7	...	7.3	...	7.2	7.9	...
1350	...		9.8	...	7.4	...	7.4	8.0	...
1400	...		9.8	...	7.5	...	7.6	8.0	...
1450	...	9.8	9.9	...	7.6	...	7.8	8.1	...
1500	...		10.0	...	7.7	...	8.0	8.1	...
1550	...		10.1	...	...	...	...	...	...
1600	...		10.2	...	...	...	...	...	...
1650	...		10.3	...	...	...	...	...	...

To convert to metric (SI units), multiply table value by 1.8 to convert to mm/mm/°C

©Tubular Exchanger Manufacturers Association, Inc.

TABLE D-11 (continued)

MEAN COEFFICIENTS OF THERMAL EXPANSION

TEMPERATURE (°F)	VALUE SHOWN IN TABLE IS THE MEAN COEFFICIENT OF THERMAL EXPANSION FROM 70 °F TO THE TEMPERATURE INDICATED (X 10^{-6} in/in/°F)								
	N10665 (Alloy B2)	N10675 (Alloy B3)	N12160 (Alloy D-205)	R20033 (Alloy 33)					
70	5.3	5.7	6.9	7.8					
100	5.4	5.7	7.0	7.9					
150	5.6	5.8	7.1	8.0					
200	5.7	5.8	7.2	8.1					
250	5.8	5.9	7.3	8.2					
300	5.9	5.9	7.4	8.3					
350	6.0	6.0	7.5	8.4					
400	6.0	6.1	7.6	8.5					
450	6.1	6.1	7.7	8.5					
500	6.1	6.2	7.8	8.5					
550	6.2	6.3	7.9	8.5					
600	6.2	6.3	7.9	8.5					
650	6.3	6.4	8.0	8.6					
700	6.3	6.4	8.0	8.6					
750	6.4	6.5	8.1	8.7					
800	6.4	6.5	8.1	8.8					
850	6.5	6.5	8.2	8.8					
900	6.5	6.5	8.2	8.9					
950	6.6	6.5	8.3	...					
1000	6.6	6.5	8.3	...					
1050	6.6	6.6	8.4	...					
1100	6.7	6.6	8.4	...					
1150	6.7	6.6	8.5	...					
1200	6.7	6.6	8.6	...					
1250	6.7	6.7	8.7	...					
1300	6.7	6.7	8.8	...					
1350	6.7	6.8	8.8	...					
1400	6.7	7.0	8.9	...					
1450	6.8	7.2	9.0	...					
1500	6.8	7.4	9.1	...					
1550	...	...	...	...					
1600	...	...	...	...					
1650	...	...	...	...					

To convert to metric (SI units), multiply table value by 1.8 to convert to mm/mm/°C

 ©Tubular Exchanger Manufacturers Association, Inc.

TABLE D-11 (continued)

MEAN COEFFICIENTS OF THERMAL EXPANSION

TEMPERATURE (°F)	VALUE SHOWN IN TABLE IS THE MEAN COEFFICIENT OF THERMAL EXPANSION FROM 70 °F TO THE TEMPERATURE INDICATED (X 10^{-6} in/in/°F)								
	Group 5 Aluminum Alloys	Group 6 Copper Alloys	Bronze Alloys	Brass Alloys	C71500 (70-30 Cu-Ni)	C70600 (90-10 Cu-Ni)		Group 7 Titanium Alloys,	R56320, R56323 Titanium Alloy, Grade 9, Grade 28
70	12.1	9.3	9.6	9.3	8.1	...		4.6	4.7
100	12.4	9.4	9.7	9.4	8.2	...		4.7	4.7
150	12.7	9.5	9.9	9.6	8.4	...		4.7	4.8
200	13.0	9.6	10.0	9.8	8.5	...		4.7	4.8
250	13.1	9.6	10.1	9.9	8.6	...		4.8	4.9
300	13.3	9.7	10.1	10.0	8.7	...		4.8	4.9
350	13.4	9.8	10.2	10.1	8.8	...		4.8	5.0
400	13.6	9.8	10.2	10.2	8.9	...		4.8	5.0
450	13.8	9.9	10.3	10.4	9.0	...		4.8	5.1
500	13.9	9.9	10.3	10.5	9.1	...		4.9	5.1
550	14.1	10.0	10.4	10.6	9.1	9.5		4.9	5.1
600	14.2	10.0	10.4	10.7	9.2	...		4.9	5.2
650	...	...	10.5	10.8	9.2	...		4.9	...
700	...	...	10.5	10.9	9.2	...		5.0	...
750	...	...	10.6	11.0	...	...		5.0	...
800	...	...	10.6	11.2	...	...		5.1	...
850	...	...	...	...	...	...		...	...
900	...	...	...	...	...	...		...	...

Group 7: Titanium Alloys

R50250 (Gr. 1)	R52400 (Gr. 7)	R52402 (Gr. 16)	R52404 (Gr. 26H)
R50400 (Gr. 2)	R52400 (Gr. 7H)	R52402 (Gr. 16H)	R52254 (Gr. 27)
R50400 (Gr. 2H)	R52250 (Gr. 11)	R52252 (Gr. 17)	
R50550 (Gr. 3)	R53400 (Gr. 12)	R52404 (Gr. 26)	

Group 6: Copper Alloys

C10200	C10500	C11000	C12200	C12500	C19200
C10400	C10700	C12000	C12300	C14200	C19400

Group 5: Aluminum Alloys

A03560	A91060	A92014	A93003	A95052	A95086	A95254	A95456	A96061
A24430	A91100	A92024	A93004	A95083	A95154	A95454	A95652	A96063

To convert to metric (SI units), multiply table value by 1.8 to convert to mm/mm/°C

©Tubular Exchanger Manufacturers Association, Inc.

TABLE D-12
THERMAL CONDUCTIVITY OF METALS

	VALUE SHOWN IN TABLE IS THE NOMINAL COEFFICIENT OF THERMAL CONDUCTIVITY AT THE TEMPERATURE INDICATED (Btu/hr-ft-°F)								
TEMPERATURE (°F)	Group A Carbon Steels (No Specified Mg or Si)	Group B Carbon Steels (w/ Specified Mg or Si)	Group C Low Alloy Steels	Group D Low Alloy Steels	Group E Low Alloy Steels 5Cr-½Mo 5Cr-½Mo-Si 5Cr-½Mo-Ti	Group F Low Alloy Steels 9Cr-1Mo	Group G High Chrome Steels 12Cr 12Cr-1Al 13Cr 13Cr-4Ni 15Cr 17Cr	Group H High Chrome Steels 27Cr	Group I High Alloy Steels 17Cr-4Ni-4Cu 15Cr-5Ni-3Mo (to 800°F)
70	34.9	27.3	23.7	21.0	15.9	12.8	14.2	11.6	10.0
100	34.7	27.6	23.6	21.0	16.2	13.1	14.2	11.6	10.1
150	34.2	27.8	23.5	21.2	16.7	13.6	14.3	11.7	10.3
200	33.7	27.8	23.5	21.3	17.1	14.0	14.3	11.7	10.6
250	33.0	27.6	23.4	21.4	17.5	14.4	14.4	11.8	10.9
300	32.3	27.3	23.4	21.5	17.8	14.7	14.4	11.8	11.2
350	31.6	26.9	23.3	21.5	18.0	15.0	14.4	11.9	11.5
400	30.9	26.5	23.1	21.5	18.2	15.2	14.5	11.9	11.7
450	30.1	26.1	23.0	21.5	18.4	15.4	14.5	12.0	12.0
500	29.4	25.7	22.7	21.4	18.5	15.6	14.5	12.0	12.3
550	28.7	25.3	22.5	21.3	18.5	15.8	14.6	12.1	12.5
600	28.0	24.9	22.2	21.1	18.5	15.9	14.6	12.2	12.8
650	27.3	24.5	21.9	20.9	18.5	16.0	14.6	12.2	13.0
700	26.6	24.1	21.6	20.7	18.5	16.0	14.6	12.3	13.1
750	26.0	23.7	21.3	20.5	18.4	16.1	14.6	12.3	13.3
800	25.3	23.2	21.0	20.2	18.3	16.1	14.7	12.4	13.4
850	24.6	22.8	20.6	20.0	18.2	16.1	14.7	12.5	13.6
900	23.8	22.3	20.3	19.7	18.1	16.1	14.7	12.6	13.7
950	23.1	21.7	20.0	19.4	17.9	16.1	14.7	12.6	13.8
1000	22.4	21.1	19.7	19.1	17.8	16.1	14.7	12.7	13.9
1050	21.6	20.5	19.4	18.8	17.6	16.0	14.7	12.8	14.0
1100	20.9	19.8	19.1	18.5	17.4	16.0	14.7	12.9	14.0
1150	20.1	19.0	18.7	18.3	17.2	15.9	14.8	13.0	14.1
1200	19.4	18.3	18.3	18.0	17.0	15.8	14.8	13.1	14.3
1250	18.6	17.6	17.7	17.7	16.8	15.7	14.8	13.2	14.4
1300	17.9	16.9	16.6	17.3	16.5	15.6	14.8	13.4	14.5
1350	17.2	16.2	15.7	16.3	16.2	15.4	14.8	13.5	14.7
1400	16.6	15.7	15.3	15.6	15.8	15.3	14.8	13.7	14.9
1450	16.0	15.2	15.1	15.4	15.6	15.1	14.8	13.8	15.2
1500	15.5	14.9	15.1	15.3	15.7	14.9	14.9	14.0	15.5

Group E: Low Alloy Steels
5Cr-½Mo 5Cr-½Mo-Si
5Cr-½Mo-Ti

Also:
¾Cr- ½Ni-Cu
1Cr-½Mo-Si
¾Ni-½Cu-Mo
2½Ni

Group D: Low Alloy Steels
2¼Cr-1Mo 3Cr-1Mo
1¾Ni- ¾Cr-¼Mo 2Ni-¾Cr-¼Mo
2Ni-1½Cr-¼Mo-V 2Ni-1Cu
3Cr-1Mo-¼V-Cb-Ca 3Cr-1Mo-¼V-Tl-B 5Cr-¼Mo
8Ni 9Ni

Group C: Low Alloy Steels
C-¼Mo C-½Mo ½Cr-⅕Mo-V ½Cr-¼Mo-Si
½Cr-½Mo ½Cr-½Ni-⅕Mo ¾Cr-¾Ni-Cu-Al 1Cr-1Mn-¼Mo
1Cr-⅕Mo 1Cr-½Mo 1¼Cr-½Mo 1¼Cr-½Mo-Si
1¾Cr-½Mo-Cu 1¾Cr-½Mo-Ti 2Cr-½Mo Mn-½Mo
Mn-½Mo-¼Ni Mn-½Mo-½Ni Mn-½Mo-¾Ni Mn-½Ni-V
Mn-V ½Ni-½Cr-¼Mo-V ½ Ni-½Mo-V ¾N-½Cr-½Mo-V
¾Ni-½Mo-⅓Cr-V ¾Ni-½Mo-Cr-V ¾Ni-1Mo-¾Cr 1Ni-½Cr-½Mo
1¼Ni-1Cr-½Mo 3½Ni-1¾Cr-½Mo-V 4Ni-1½Cr-½Mo-V

To convert to metric (SI units), multiply table value by 1.73 for W/m °C

©Tubular Exchanger Manufacturers Association, Inc.

TABLE D-12 (continued)

THERMAL CONDUCTIVITY OF METALS

	VALUE SHOWN IN TABLE IS THE NOMINAL COEFFICIENT OF THERMAL CONDUCTIVITY AT THE TEMPERATURE INDICATED (Btu/hr-ft-°F)								
TEMPERATURE (°F)	Group J High Alloy Steels	Group K High Alloy Steels	Group L High Alloy Steels	7Cr-½Mo	17-19 Cr (TP 439)	S32900 7 Mo	S32950 7 Mo plus	Cr-Mo Alloy XM-27	AL 29-4-2
70	8.6	8.2	6.4	14.1	...	...	...	...	8.8
100	8.7	8.3	6.6	14.4	...	8.8	8.6	...	...
150	9.0	8.6	6.9	14.9	...	9.1	9.0	...	...
200	9.3	8.8	7.1	15.3	14.0	9.3	9.4	11.3	...
250	9.6	9.1	7.4	15.7	...	9.6	9.8	...	...
300	9.8	9.3	7.7	16.0	...	9.8	10.2	...	...
350	10.1	9.5	8.0	16.3	...	10.1	10.7	...	...
400	10.4	9.8	8.2	16.5	...	10.3	11.1	...	...
450	10.6	10.0	8.5	16.7	...	10.6	11.5	...	...
500	10.9	10.2	8.8	16.9	...	10.8	11.8	...	11.0
550	11.1	10.5	9.1	17.0	...	11.1	12.3	...	...
600	11.3	10.7	9.3	17.1	...	11.3	12.7	...	...
650	11.6	10.9	9.6	17.2	...	...	...	...	...
700	11.8	11.2	9.9	17.2	...	...	...	...	...
750	12.0	11.4	10.1	17.3	...	...	...	...	...
800	12.3	11.6	10.4	17.3	...	...	...	...	...
850	12.5	11.9	10.7	17.3	...	...	...	...	...
900	12.7	12.1	10.9	17.2	...	...	...	...	...
950	12.9	12.3	11.2	17.2	...	...	...	...	...
1000	13.1	12.5	11.4	17.1	...	...	...	...	...
1050	13.4	12.8	11.7	17.0	...	...	...	...	...
1100	13.6	13.0	11.9	16.8	...	...	...	...	...
1150	13.8	13.2	12.2	16.7	...	...	...	...	...
1200	14.0	13.4	12.5	16.6	...	...	...	...	...
1250	14.3	13.6	12.7	16.4	...	...	...	...	...
1300	14.5	13.8	13.0	16.2	...	...	...	...	...
1350	14.7	14.1	13.2	15.9	...	...	...	...	...
1400	14.9	14.3	13.5	15.6	...	...	...	...	...
1450	15.1	14.5	13.7	15.6	...	...	...	...	...
1500	15.3	14.7	14.0	15.5	...	...	...	...	...

Group J
- 15Cr-6Ni-Cu-Mo (to 800°F)
- 17Cr-7Ni-1Al (to 800°F)
- 18Cr-8Ni
- 18Cr-8Ni-S (or Se)
- 18Cr-11Ni
- 22Cr-2Ni-Mo-N
- 23Cr-4Ni-Mo-Cu

Group L
- 14Cr-16Ni-6Si-Cu-Mo
- 18Cr-18Ni-2Si
- 18Cr-20Ni-5.5Si
- 22Cr-13Ni-5Mn
- 24Cr-22Ni-6Mo-2W-Cu-N
- 24Cr-22Ni-7.5Mo
- 25Cr-12Ni
- 25Cr-35Ni-N-Ce
- 31Ni-31Fe-29Cr-Mo

Group K: Stainless Steels

13Cr-8Ni-2Mo (to 800°F)	16Cr-12Ni-2Mo	18Cr-5Ni-3Mo	18Cr-10Ni-Cb
18Cr-10Ni-Ti	18Cr-13Ni-3Mo	18Cr-15Ni-4Si	19Cr-9Ni-Mo-W
21Cr-11Ni-N	22Cr-5Ni-3Mo-N	23Cr-12Ni	25Cr-7Ni-4Mo-N
25Ni-15Cr-2Ti	25Cr-20Ni	25Cr-20Ni-2Mo	29Cr-7Ni-2Mo-N
29Ni-20Cr-3Cu-2Mo	44Fe-25Ni-21Cr-Mo		

To convert to metric (SI units), multiply table value by 1.73 for W/m °C

©Tubular Exchanger Manufacturers Association, Inc.

TABLE D-12 (continued)

THERMAL CONDUCTIVITY OF METALS

TEMPERATURE (°F)	VALUE SHOWN IN TABLE IS THE NOMINAL COEFFICIENT OF THERMAL CONDUCTIVITY AT THE TEMPERATURE INDICATED (Btu/hr-ft-°F)								
	Sea-Cure	N02200 (Nickel)	N02201 (Low C-Nickel)	N04400 N04405 (Ni-Cu)	N06002 (Ni-Cr-Mo-Fe)	N06007 (Ni-Cr-Fe-Mo-Cu)	N06022	N06030	N06045
70	9.4	...	...	12.6	5.2	5.8	5.6	5.9	7.5
100	9.6	...	...	12.9	5.5	6.0	5.8	6.1	...
150	10.0	...	...	13.4	5.9	6.2	6.0	6.5	...
200	10.3	38.7	42.5	13.9	6.3	6.4	6.4	6.9	...
250	10.6	38.0	41.8	14.5	6.6	6.7	6.7	7.3	...
300	10.9	37.2	40.7	15.0	7.0	6.9	7.0	7.6	...
350	11.3	36.3	39.5	15.6	7.3	7.2	7.4	8.0	...
400	11.6	35.5	38.2	16.1	7.6	7.4	7.8	8.4	...
450	12.0	34.8	37.0	16.6	7.9	7.7	8.1	8.7	...
500	12.3	34.1	35.9	17.0	8.2	7.9	8.5	9.1	...
550	12.6	33.3	35.0	17.5	8.5	8.2	8.8	9.5	...
600	12.9	32.5	34.2	17.9	8.8	8.4	9.1	9.8	...
650	13.3	31.8	33.7	18.4	9.1	8.6	9.4	10.2	...
700	13.7	31.7	33.3	18.9	9.4	8.9	9.7	10.5	...
750	...	32.2	33.1	19.3	9.7	9.2	10.1	10.8	...
800	...	32.5	33.0	19.9	10.1	9.4	10.4	11.1	...
850	...	32.8	33.1	20.4	10.4	9.7	10.7	11.4	...
900	...	33.1	33.3	20.9	10.7	9.9	11.0	11.6	...
950	...	33.4	33.6	21.5	11.0	10.2	11.4	11.9	...
1000	...	33.8	34.0	22.0	11.4	10.5	11.7	12.1	...
1050	...	...	34.4	...	11.7	10.7	12.0	12.2	...
1100	...	...	34.9	...	12.0	10.9	12.3	12.4	...
1150	...	...	35.3	...	12.3	11.1	...	...	...
1200	...	...	35.7	...	12.6	11.2	...	...	...
1250	...	...	36.1	...	12.9	...	...	...	...
1300	...	...	36.4	...	13.2	...	...	...	...
1350	...	...	36.7	...	13.5	...	...	...	...
1400	...	...	37.0	...	13.8	...	...	...	...
1450	...	...	37.4	...	14.2	...	...	...	...
1500	...	...	37.8	...	14.6	...	...	...	...

To convert to metric (SI units), multiply table value by 1.73 for W/m °C

 ©Tubular Exchanger Manufacturers Association, Inc.

TABLE D-12 (continued)

THERMAL CONDUCTIVITY OF METALS

	VALUE SHOWN IN TABLE IS THE NOMINAL COEFFICIENT OF THERMAL CONDUCTIVITY AT THE TEMPERATURE INDICATED (Btu/hr-ft-°F)								
TEMPERATURE (°F)	N06059	N06230	N06455 N06686 (Ni-Mo-Cr-Low C)	N06600 (Ni-Cr-Fe)	N06625 (Ni-Cr-Mo-Cb)	N06690 (Ni-Cr-Fe)	N07718 (Ni-Cr-Fe-Mo-Cb)	N07750 (70Ni-16Cr-7Fe-Ti-Al)	N08020 (Cr-Ni-Fe-Mo-Cu-Cb)
70	6.0	5.2	5.8	8.6	5.7	6.8	6.4	6.9	...
100	6.3	5.4	5.9	8.7	5.8	7.0	6.6	7.0	6.9
150	6.6	5.6	6.2	8.9	6.0	7.3	6.8	7.2	7.2
200	6.9	5.9	6.5	9.1	6.3	7.6	7.1	7.4	7.5
250	7.2	6.2	6.8	9.3	6.5	7.9	7.4	7.6	7.8
300	7.4	6.6	7.1	9.6	6.7	8.2	7.7	7.8	8.0
350	7.7	6.9	7.4	9.8	7.0	8.5	7.9	8.0	8.3
400	7.9	7.2	7.7	10.1	7.2	8.8	8.2	8.2	8.6
450	8.2	7.5	8.0	10.3	7.5	9.1	8.5	8.4	8.8
500	8.5	7.9	8.2	10.6	7.7	9.4	8.8	8.6	9.1
550	8.7	8.2	8.5	10.8	7.9	9.7	9.0	8.8	9.4
600	9.0	8.5	8.8	11.1	8.2	10.0	9.3	9.1	9.7
650	9.3	8.9	9.1	11.3	8.4	10.3	9.6	9.3	10.0
700	9.5	9.2	9.3	11.6	8.7	10.6	9.9	9.5	10.2
750	9.8	9.5	9.6	11.8	8.9	10.9	10.1	9.8	10.5
800	10.1	9.8	9.9	12.1	9.1	11.2	10.4	10.0	10.8
850	10.3	10.2	10.2	12.4	9.4	11.5	10.7	10.2	11.0
900	10.6	10.5	10.5	12.6	9.6	11.8	11.0	10.5	11.3
950	10.8	10.8	10.8	12.9	9.8	12.2	11.2	10.7	11.6
1000	11.1	11.1	11.1	13.2	10.1	12.5	11.5	10.9	11.9
1050	11.4	11.4	11.5	13.4	10.3	12.8	11.8	...	...
1100	11.7	11.7	11.8	13.7	10.5	13.1	12.0	...	...
1150	...	12.0	12.1	14.0	10.8	13.4	12.3	...	...
1200	...	12.3	12.5	14.3	11.0	13.7	12.6	...	...
1250	...	12.7	...	14.6	11.3	14.0	12.8	...	...
1300	...	13.0	...	14.9	11.5	14.3	13.1	...	...
1350	...	13.3	...	15.2	11.8	14.6	13.3	...	...
1400	...	13.6	...	15.5	12.0	14.9	13.6	...	...
1450	...	13.9	...	15.8	12.3	15.2	13.8	...	...
1500	...	14.2	...	16.0	12.6	15.5	14.1	...	...

To convert to metric (SI units), multiply table value by 1.73 for W/m °C

 ©Tubular Exchanger Manufacturers Association, Inc.

TABLE D-12 (continued)

THERMAL CONDUCTIVITY OF METALS

	VALUE SHOWN IN TABLE IS THE NOMINAL COEFFICIENT OF THERMAL CONDUCTIVITY AT THE TEMPERATURE INDICATED (Btu/hr-ft-°F)								
TEMPERATURE (°F)	N08367 (AL6XN) N08031	N08330 (Ni-Fe-Cr-Si)	N08800 N08801 N08810 N08811 (Ni-Fe-Cr)	N08825 (Ni-Fe-Cr-Mo-Cu)	N10001 (Ni-Mo)	N10003 (Ni-Mo-Cr-Fe)	N10242 (65Ni-25Mo-8Cr-2Fe)	N10276 (Ni-Mo-Cr)	N10629
70	6.7	7.1	6.7	...	...	...	6.3	...	6.4
100	6.9	7.3	6.8	...	6.1	...	6.4	5.9	6.5
150	7.2	7.5	7.1	...	6.2	6.2	6.7	6.2	6.8
200	7.5	7.7	7.4	7.1	6.4	6.5	7.0	6.4	7.0
250	7.8	7.9	7.7	7.3	6.5	6.8	7.2	6.7	7.2
300	8.1	8.2	8.0	7.6	6.7	7.0	7.5	7.0	7.4
350	8.4	8.5	8.3	7.9	6.8	7.2	7.7	7.2	7.6
400	8.7	8.8	8.5	8.1	7.0	7.4	8.0	7.5	7.8
450	9.0	9.1	8.8	8.4	7.2	7.6	8.2	7.8	8.0
500	9.3	9.4	9.1	8.6	7.4	7.9	8.5	8.1	8.2
550	9.6	9.7	9.3	8.9	7.5	8.1	8.8	8.4	8.4
600	9.8	10.0	9.6	9.1	7.7	8.3	9.0	8.7	8.7
650	10.1	10.3	9.8	9.3	8.0	8.5	9.3	8.9	8.9
700	10.4	10.6	10.1	9.6	8.2	8.7	9.5	9.2	9.1
750	10.6	10.9	10.3	9.8	8.4	9.0	9.8	9.5	9.3
800	10.9	11.2	10.6	10.0	8.7	9.2	10.1	9.8	9.5
850	11.2	11.5	10.8	10.2	9.0	9.5	10.3	10.1	9.7
900	11.5	11.8	11.1	10.4	9.3	9.8	10.6	10.4	9.9
950	11.8	12.1	11.3	10.7	9.7	10.1	10.8	10.7	10.1
1000	12.0	12.4	11.6	10.9	10.0	10.4	11.1	11.0	10.3
1050	12.3	12.7	11.8	11.1	10.4	10.7	11.3	11.3	10.5
1100	12.6	13.0	12.1	11.4	10.7	11.1	11.6	11.5	10.8
1150	...	13.3	12.4	11.6	11.1	11.4	11.9	11.8	11.3
1200	...	13.5	12.7	11.8	...	11.7	12.1	12.1	12.0
1250	...	13.8	13.0	12.1	...	12.1	12.4	...	...
1300	...	...	13.3	12.4	...	12.5	12.7	...	...
1350	...	...	13.6	12.7	...	12.9	12.9	...	...
1400	...	...	13.9	13.0	...	13.3	13.2	...	...
1450	...	...	14.2	13.3	...	13.7	13.4	...	...
1500	...	...	14.5	13.6	...	14.2	13.7	...	...

To convert to metric (SI units), multiply table value by 1.73 for W/m °C

 ©Tubular Exchanger Manufacturers Association, Inc.

TABLE D-12 (continued)

THERMAL CONDUCTIVITY OF METALS

	VALUE SHOWN IN TABLE IS THE NOMINAL COEFFICIENT OF THERMAL CONDUCTIVITY AT THE TEMPERATURE INDICATED (Btu/hr-ft-°F)									
TEMPERATURE (°F)	N10665 (Ni-Mo)	N10675	N12160	Titanium Alloys	Titanium Alloy R56320 (Grades 9 and 28)	Titanium Grade 38		R20033	Zirconium	Copper
						TC	TD			
70	...	6.5	6.3	12.7	5.1	4.3	0.122	7.7	...	...
100	6.8	6.6	6.4	12.5	5.2	4.4	0.124	7.9	...	...
150	6.9	6.8	6.6	12.2	5.5	4.6	0.127	8.1	...	...
200	7.0	6.9	6.8	12.0	5.7	4.8	0.130	8.4	12.0	225.0
250	7.2	7.1	7.1	11.9	5.9	5.0	0.133	8.6	...	225.0
300	7.3	7.3	7.3	11.7	6.1	5.2	0.137	8.8	...	225.0
350	7.5	7.5	7.6	11.6	6.2	5.4	0.141	9.1	...	224.5
400	7.6	7.7	7.9	11.5	6.4	5.6	0.144	9.3	...	224.0
450	7.8	8.0	8.2	11.4	6.6	5.8	0.148	9.5	...	224.0
500	8.0	8.2	8.5	11.3	6.7	6.0	0.152	9.8	...	224.0
550	8.2	8.4	8.8	11.2	6.8	6.2	0.157	10.0	...	223.5
600	8.4	8.7	9.1	11.2	6.9	6.4	0.161	10.3	...	223.0
650	8.6	8.9	9.4	11.2	...	6.6	0.165	10.5	...	...
700	8.9	9.2	9.8	11.2	...	6.9	0.171	10.7	...	...
750	9.1	9.4	10.1	11.2	...	7.2	0.177	11.0	...	...
800	9.4	9.7	10.5	11.2	...	7.5	0.184	11.2	...	...
850	9.7	9.9	10.9	11.2	...	...	...	11.4	...	...
900	10.0	10.2	11.2	11.3	...	...	...	11.6	...	...
950	10.3	10.5	11.6	11.4	...	...	...	...	...	...
1000	10.7	10.7	12.0	11.4	...	...	...	...	...	...
1050	11.0	11.0	12.4	11.5	...	...	...	...	...	...
1100	11.4	11.3	12.8	11.6	...	...	...	...	...	...
1150	11.8	11.6	13.1	...	...	...	...	...	...	...
1200	12.2	11.8	13.5	...	...	...	...	...	...	...
1250	...	12.1	13.9	...	...	...	...	...	...	...
1300	...	12.4	14.2	...	...	...	...	...	...	...
1350	...	12.7	14.5	...	...	...	...	...	...	...
1400	...	13.0	14.8	...	...	...	...	...	...	...
1450	...	13.3	15.0	...	...	...	...	...	...	...
1500	...	13.7	15.1	...	...	...	...	...	...	...

Titanium Alloys

R50250 (Gr. 1)	R50550 (Gr. 3)	R52250 (Gr. 11)	R52402 (Gr. 16)
R50400 (Gr. 2)	R52400 (Gr. 7)	R53400 (Gr. 12)	R52252 (Gr. 17)
R52404 (Gr.26)	R52254 (Gr.27)	Gr. 2H, 7H, 16H, 26H	

To convert to metric (SI units), multiply table value by 1.73 for W/m °C

 ©Tubular Exchanger Manufacturers Association, Inc.

TABLE D-12 (continued)

THERMAL CONDUCTIVITY OF METALS

	VALUE SHOWN IN TABLE IS THE NOMINAL COEFFICIENT OF THERMAL CONDUCTIVITY AT THE TEMPERATURE INDICATED (Btu/hr-ft-°F)									
TEMPERATURE (°F)	Muntz	Admiralty	Naval Brass	90-10 Cu-Ni	C71500 70-30 Cu-Ni	A24430	A03560	A91060	A91100	A92014
70	...	...	...	...	...	94.0	92.0	135.2	133.1	89.9
100	...	...	...	...	...	94.5	92.9	133.7	131.8	90.9
150	...	...	...	...	...	96.0	94.2	131.7	130.0	92.3
200	71.0	70.0	71.0	30.0	18.0	97.3	95.4	130.1	128.5	93.6
250	...	72.5	72.5	30.5	18.5	98.2	96.4	128.7	127.3	94.7
300	...	75.0	74.0	31.0	19.0	98.9	97.4	127.5	126.2	95.7
350	...	77.0	75.5	32.5	20.0	99.8	98.2	126.5	125.3	96.6
400	...	79.0	77.0	34.0	21.0	100.4	98.9	125.6	124.5	97.4
450	...	81.5	78.5	35.5	22.0	...	...	...	...	...
500	...	84.0	80.0	37.0	23.0	...	...	...	...	...
550	...	86.5	81.5	39.5	24.0	...	...	...	...	...
600	...	89.0	83.0	42.0	25.0	...	...	...	...	...
650	...	...	...	44.5	26.0	...	...	...	...	...
700	...	...	...	47.0	27.0	...	...	...	...	...
750	...	...	...	48.0	28.5	...	...	...	...	...
800	...	...	...	49.0	30.0	...	...	...	...	...
850	...	...	...	50.0	31.5	...	...	...	...	...
900	...	...	...	51.0	33.0	...	...	...	...	...
950	...	...	...	52.0	35.0	...	...	...	...	...
1000	...	...	...	53.0	37.0	...	...	...	...	...

To convert to metric (SI units), multiply table value by 1.73 for W/m °C

TABLE D-12 (continued)

THERMAL CONDUCTIVITY OF METALS

	VALUE SHOWN IN TABLE IS THE NOMINAL COEFFICIENT OF THERMAL CONDUCTIVITY AT THE TEMPERATURE INDICATED (Btu/hr-ft-°F)									
TEMPERATURE (°F)	A92024	A93003	A93004	A95052 A95652	A95083	A95086 A95154 A95254	A95454	A95456	A96061	A96063
70	85.8	102.3	94.0	79.6	67.2	73.4	77.5	67.2	96.1	120.8
100	86.9	102.8	94.9	80.8	68.7	74.8	78.6	68.7	96.9	120.3
150	88.5	103.5	96.1	82.7	70.8	76.8	80.7	70.8	98.0	119.7
200	90.0	104.2	97.2	84.4	72.8	78.7	82.6	72.8	99.0	119.0
250	91.3	104.7	98.1	85.9	74.6	80.3	84.1	74.6	99.8	118.5
300	92.4	105.2	99.0	87.2	76.2	81.9	85.4	76.3	100.6	118.1
350	93.4	105.7	99.7	88.4	77.8	83.2	86.7	77.8	101.3	118.0
400	94.4	106.1	100.4	89.6	79.2	84.5	87.9	79.2	101.9	117.6

To convert to metric (SI units), multiply table value by 1.73 for W/m °C

 ©Tubular Exchanger Manufacturers Association, Inc.

TABLE D-13
WEIGHTS OF DISCS (1)

Diameter	Weight per Inch of Thickness	Diameter	Weight per Inch of Thickness	Diameter	Weight per Inch of Thickness	Diameter	Weight per Inch of Thickness	Diameter	Weight per Inch of Thickness
Inches	Pounds	Inches	Pounds	Inches	Pounds	Inches	Pounds	Inches	Pounds
0.000	0.00	4.000	3.56	8.000	14.26	12.000	32.07	16.000	57.02
0.125	0.00	4.125	3.79	8.125	14.70	12.125	32.75	16.125	57.92
0.250	0.01	4.250	4.02	8.250	15.16	12.250	33.42	16.250	58.82
0.375	0.03	4.375	4.26	8.375	15.62	12.375	34.11	16.375	59.73
0.500	0.06	4.500	4.51	8.500	16.09	12.500	34.80	16.500	60.64
0.625	0.09	4.625	4.76	8.625	16.57	12.625	35.50	16.625	61.56
0.750	0.13	4.750	5.03	8.750	17.05	12.750	36.21	16.750	62.49
0.875	0.17	4.875	5.29	8.875	17.54	12.875	36.92	16.875	63.43
1.000	0.22	5.000	5.57	9.000	18.04	13.000	37.64	17.000	64.37
1.125	0.28	5.125	5.85	9.125	18.55	13.125	38.37	17.125	65.32
1.250	0.35	5.250	6.14	9.250	19.06	13.250	39.10	17.250	66.28
1.375	0.42	5.375	6.44	9.375	19.58	13.375	39.85	17.375	67.24
1.500	0.50	5.500	6.74	9.500	20.10	13.500	40.59	17.500	68.21
1.625	0.59	5.625	7.05	9.625	20.63	13.625	41.35	17.625	69.19
1.750	0.68	5.750	7.36	9.750	21.17	13.750	42.11	17.750	70.18
1.875	0.78	5.875	7.69	9.875	21.72	13.875	42.88	17.875	71.17
2.000	0.89	6.000	8.02	10.000	22.27	14.000	43.66	18.000	72.17
2.125	1.01	6.125	8.36	10.125	22.83	14.125	44.44	18.125	73.17
2.250	1.13	6.250	8.70	10.250	23.40	14.250	45.23	18.250	74.19
2.375	1.26	6.375	9.05	10.375	23.98	14.375	46.03	18.375	75.21
2.500	1.39	6.500	9.41	10.500	24.56	14.500	46.83	18.500	76.23
2.625	1.53	6.625	9.78	10.625	25.15	14.625	47.64	18.625	77.27
2.750	1.68	6.750	10.15	10.750	25.74	14.750	48.46	18.750	78.31
2.875	1.84	6.875	10.53	10.875	26.34	14.875	49.28	18.875	79.35
3.000	2.00	7.000	10.91	11.000	26.95	15.000	50.12	19.000	80.41
3.125	2.18	7.125	11.31	11.125	27.57	15.125	50.96	19.125	81.47
3.250	2.35	7.250	11.71	11.250	28.19	15.250	51.80	19.250	82.54
3.375	2.54	7.375	12.11	11.375	28.82	15.375	52.65	19.375	83.61
3.500	2.73	7.500	12.53	11.500	29.46	15.500	53.51	19.500	84.70
3.625	2.93	7.625	12.95	11.625	30.10	15.625	54.38	19.625	85.79
3.750	3.13	7.750	13.38	11.750	30.75	15.750	55.25	19.750	86.88
3.875	3.34	7.875	13.81	11.875	31.41	15.875	56.13	19.875	87.99

(1) Weights are based on low carbon steel with a density of 0.2836 lb/inch^3
For other metals, multiply by the following factors:

Aluminum	0.35	Muntz Metal	1.07
Titanium	0.58	Nickel-Chrome-Iron	1.07
A.I.S.I 400 Series S/Steels	0.99	Admiralty	1.09
A.I.S.I 300 Series S/Steels	1.02	Nickel	1.13
Aluminum Bronze	1.04	Nickel-Copper	1.12
Naval Rolled Brass	1.07	Copper & Cupro Nickels	1.14

©Tubular Exchanger Manufacturers Association, Inc.

TABLE D-13 (continued)
WEIGHTS OF DISCS

Diameter	Weight per Inch of Thickness	Diameter	Weight per Inch of Thickness	Diameter	Weight per Inch of Thickness	Diameter	Weight per Inch of Thickness	Diameter	Weight per Inch of Thickness
Inches	Pounds	Inches	Pounds	Inches	Pounds	Inches	Pounds	Inches	Pounds
20.000	89.10	26.000	150.57	32.000	228.08	38.000	321.64	44.000	431.22
20.125	90.21	26.125	152.02	32.125	229.87	38.125	323.75	44.125	433.68
20.250	91.34	26.250	153.48	32.250	231.66	38.250	325.88	44.250	436.14
20.375	92.47	26.375	154.95	32.375	233.46	38.375	328.01	44.375	438.60
20.500	93.61	26.500	156.42	32.500	235.27	38.500	330.15	44.500	441.08
20.625	94.75	26.625	157.90	32.625	237.08	38.625	332.30	44.625	443.56
20.750	95.90	26.750	159.38	32.750	238.90	38.750	334.46	44.750	446.05
20.875	97.06	26.875	160.88	32.875	240.73	38.875	336.62	44.875	448.54
21.000	98.23	27.000	162.38	33.000	242.56	39.000	338.79	45.000	451.05
21.125	99.40	27.125	163.88	33.125	244.40	39.125	340.96	45.125	453.56
21.250	100.58	27.250	165.40	33.250	246.25	39.250	343.14	45.250	456.07
21.375	101.77	27.375	166.92	33.375	248.11	39.375	345.33	45.375	458.60
21.500	102.96	27.500	168.45	33.500	249.97	39.500	347.53	45.500	461.13
21.625	104.16	27.625	169.98	33.625	251.84	39.625	349.73	45.625	463.66
21.750	105.37	27.750	171.52	33.750	253.71	39.750	351.94	45.750	466.21
21.875	106.58	27.875	173.07	33.875	255.60	39.875	354.16	45.875	468.76
22.000	107.81	28.000	174.63	34.000	257.49	40.000	356.38	46.000	471.32
22.125	109.03	28.125	176.19	34.125	259.38	40.125	358.61	46.125	473.88
22.250	110.27	28.250	177.76	34.250	261.29	40.250	360.85	46.250	476.45
22.375	111.51	28.375	179.34	34.375	263.20	40.375	363.10	46.375	479.03
22.500	112.76	28.500	180.92	34.500	265.12	40.500	365.35	46.500	481.62
22.625	114.02	28.625	182.51	34.625	267.04	40.625	367.61	46.625	484.21
22.750	115.28	28.750	184.11	34.750	268.97	40.750	369.87	46.750	486.81
22.875	116.55	28.875	185.71	34.875	270.91	40.875	372.14	46.875	489.42
23.000	117.83	29.000	187.32	35.000	272.86	41.000	374.42	47.000	492.03
23.125	119.11	29.125	188.94	35.125	274.81	41.125	376.71	47.125	494.65
23.250	120.40	29.250	190.57	35.250	276.77	41.250	379.00	47.250	497.28
23.375	121.70	29.375	192.20	35.375	278.73	41.375	381.30	47.375	499.91
23.500	123.01	29.500	193.84	35.500	280.71	41.500	383.61	47.500	502.55
23.625	124.32	29.625	195.48	35.625	282.69	41.625	385.93	47.625	505.20
23.750	125.64	29.750	197.14	35.750	284.67	41.750	388.25	47.750	507.86
23.875	126.96	29.875	198.80	35.875	286.67	41.875	390.58	47.875	510.52
24.000	128.30	30.000	200.47	36.000	288.67	42.000	392.91	48.000	513.19
24.125	129.64	30.125	202.14	36.125	290.68	42.125	395.25	48.125	515.87
24.250	130.98	30.250	203.82	36.250	292.69	42.250	397.60	48.250	518.55
24.375	132.34	30.375	205.51	36.375	294.71	42.375	399.96	48.375	521.24
24.500	133.70	30.500	207.20	36.500	296.74	42.500	402.32	48.500	523.94
24.625	135.07	30.625	208.90	36.625	298.78	42.625	404.69	48.625	526.64
24.750	136.44	30.750	210.61	36.750	300.82	42.750	407.07	48.750	529.35
24.875	137.82	30.875	212.33	36.875	302.87	42.875	409.45	48.875	532.07
25.000	139.21	31.000	214.05	37.000	304.93	43.000	411.84	49.000	534.80
25.125	140.61	31.125	215.78	37.125	306.99	43.125	414.24	49.125	537.53
25.250	142.01	31.250	217.52	37.250	309.06	43.250	416.65	49.250	540.27
25.375	143.42	31.375	219.26	37.375	311.14	43.375	419.06	49.375	543.01
25.500	144.84	31.500	221.01	37.500	313.23	43.500	421.48	49.500	545.77
25.625	146.26	31.625	222.77	37.625	315.32	43.625	423.90	49.625	548.53
25.750	147.69	31.750	224.53	37.750	317.42	43.750	426.34	49.750	551.29
25.875	149.13	31.875	226.31	37.875	319.52	43.875	428.78	49.875	554.07

©Tubular Exchanger Manufacturers Association, Inc.

TABLE D-13 (continued)
WEIGHTS OF DISCS

Diameter	Weight per Inch of Thickness	Diameter	Weight per Inch of Thickness	Diameter	Weight per Inch of Thickness	Diameter	Weight per Inch of Thickness	Diameter	Weight per Inch of Thickness
Inches	Pounds	Inches	Pounds	Inches	Pounds	Inches	Pounds	Inches	Pounds
50.000	556.85	56.000	698.51	62.000	856.21	68.000	1029.94	74.000	1219.72
50.125	559.64	56.125	701.63	62.125	859.66	68.125	1033.73	74.125	1223.84
50.250	562.43	56.250	704.76	62.250	863.13	68.250	1037.53	74.250	1227.97
50.375	565.23	56.375	707.90	62.375	866.60	68.375	1041.34	74.375	1232.11
50.500	568.04	56.500	711.04	62.500	870.07	68.500	1045.15	74.500	1236.26
50.625	570.86	56.625	714.19	62.625	873.56	68.625	1048.96	74.625	1240.41
50.750	573.68	56.750	717.34	62.750	877.05	68.750	1052.79	74.750	1244.57
50.875	576.51	56.875	720.51	62.875	880.55	68.875	1056.62	74.875	1248.73
51.000	579.34	57.000	723.68	63.000	884.05	69.000	1060.46	75.000	1252.91
51.125	582.19	57.125	726.86	63.125	887.56	69.125	1064.31	75.125	1257.09
51.250	585.04	57.250	730.04	63.250	891.08	69.250	1068.16	75.250	1261.27
51.375	587.90	57.375	733.23	63.375	894.61	69.375	1072.02	75.375	1265.47
51.500	590.76	57.500	736.43	63.500	898.14	69.500	1075.88	75.500	1269.67
51.625	593.63	57.625	739.64	63.625	901.68	69.625	1079.76	75.625	1273.88
51.750	596.51	57.750	742.85	63.750	905.22	69.750	1083.64	75.750	1278.09
51.875	599.39	57.875	746.07	63.875	908.78	69.875	1087.53	75.875	1282.31
52.000	602.29	58.000	749.29	64.000	912.34	70.000	1091.42	76.000	1286.54
52.125	605.19	58.125	752.53	64.125	915.91	70.125	1095.32	76.125	1290.78
52.250	608.09	58.250	755.77	64.250	919.48	70.250	1099.23	76.250	1295.02
52.375	611.00	58.375	759.01	64.375	923.06	70.375	1103.15	76.375	1299.27
52.500	613.92	58.500	762.27	64.500	926.65	70.500	1107.07	76.500	1303.52
52.625	616.85	58.625	765.53	64.625	930.24	70.625	1111.00	76.625	1307.79
52.750	619.79	58.750	768.80	64.750	933.85	70.750	1114.93	76.750	1312.06
52.875	622.73	58.875	772.07	64.875	937.46	70.875	1118.88	76.875	1316.33
53.000	625.67	59.000	775.35	65.000	941.07	71.000	1122.83	77.000	1320.62
53.125	628.63	59.125	778.64	65.125	944.69	71.125	1126.78	77.125	1324.91
53.250	631.59	59.250	781.94	65.250	948.32	71.250	1130.75	77.250	1329.21
53.375	634.56	59.375	785.24	65.375	951.96	71.375	1134.72	77.375	1333.51
53.500	637.53	59.500	788.55	65.500	955.61	71.500	1138.70	77.500	1337.83
53.625	640.52	59.625	791.87	65.625	959.26	71.625	1142.68	77.625	1342.14
53.750	643.51	59.750	795.19	65.750	962.91	71.750	1146.67	77.750	1346.47
53.875	646.50	59.875	798.52	65.875	966.58	71.875	1150.67	77.875	1350.80
54.000	649.51	60.000	801.86	66.000	970.25	72.000	1154.68	78.000	1355.14
54.125	652.52	60.125	805.20	66.125	973.93	72.125	1158.69	78.125	1359.49
54.250	655.53	60.250	808.56	66.250	977.62	72.250	1162.71	78.250	1363.84
54.375	658.56	60.375	811.91	66.375	981.31	72.375	1166.74	78.375	1368.21
54.500	661.59	60.500	815.28	66.500	985.01	72.500	1170.77	78.500	1372.57
54.625	664.63	60.625	818.65	66.625	988.71	72.625	1174.81	78.625	1376.95
54.750	667.67	60.750	822.03	66.750	992.43	72.750	1178.86	78.750	1381.33
54.875	670.73	60.875	825.42	66.875	996.15	72.875	1182.91	78.875	1385.72
55.000	673.79	61.000	828.81	67.000	999.88	73.000	1186.98	79.000	1390.11
55.125	676.85	61.125	832.21	67.125	1003.61	73.125	1191.04	79.125	1394.52
55.250	679.92	61.250	835.62	67.250	1007.35	73.250	1195.12	79.250	1398.93
55.375	683.00	61.375	839.03	67.375	1011.10	73.375	1199.20	79.375	1403.34
55.500	686.09	61.500	842.45	67.500	1014.85	73.500	1203.29	79.500	1407.77
55.625	689.19	61.625	845.88	67.625	1018.62	73.625	1207.39	79.625	1412.20
55.750	692.29	61.750	849.32	67.750	1022.39	73.750	1211.49	79.750	1416.63
55.875	695.39	61.875	852.76	67.875	1026.16	73.875	1215.60	79.875	1421.08

©Tubular Exchanger Manufacturers Association, Inc.

TABLE D-13 (continued)
WEIGHTS OF DISCS

Diameter	Weight per Inch of Thickness	Diameter	Weight per Inch of Thickness	Diameter	Weight per Inch of Thickness	Diameter	Weight per Inch of Thickness	Diameter	Weight per Inch of Thickness
Inches	Pounds	Inches	Pounds	Inches	Pounds	Inches	Pounds	Inches	Pounds
80.000	1425.53	86.000	1647.38	92.000	1885.26	98.000	2139.18	104.000	2409.14
80.125	1429.99	86.125	1652.17	92.125	1890.39	98.125	2144.65	104.125	2414.94
80.250	1434.45	86.250	1656.97	92.250	1895.52	98.250	2150.11	104.250	2420.74
80.375	1438.92	86.375	1661.78	92.375	1900.66	98.375	2155.59	104.375	2426.55
80.500	1443.40	86.500	1666.59	92.500	1905.81	98.500	2161.07	104.500	2432.36
80.625	1447.89	86.625	1671.41	92.625	1910.96	98.625	2166.56	104.625	2438.19
80.750	1452.38	86.750	1676.24	92.750	1916.13	98.750	2172.05	104.750	2444.02
80.875	1456.88	86.875	1681.07	92.875	1921.29	98.875	2177.56	104.875	2449.85
81.000	1461.39	87.000	1685.91	93.000	1926.47	99.000	2183.06	105.000	2455.70
81.125	1465.90	87.125	1690.76	93.125	1931.65	99.125	2188.58	105.125	2461.55
81.250	1470.42	87.250	1695.61	93.250	1936.84	99.250	2194.10	105.250	2467.40
81.375	1474.95	87.375	1700.48	93.375	1942.04	99.375	2199.63	105.375	2473.27
81.500	1479.49	87.500	1705.34	93.500	1947.24	99.500	2205.17	105.500	2479.14
81.625	1484.03	87.625	1710.22	93.625	1952.45	99.625	2210.72	105.625	2485.02
81.750	1488.58	87.750	1715.10	93.750	1957.67	99.750	2216.27	105.750	2490.90
81.875	1493.13	87.875	1719.99	93.875	1962.89	99.875	2221.82	105.875	2496.80
82.000	1497.70	88.000	1724.89	94.000	1968.12	100.000	2227.39	106.000	2502.69
82.125	1502.27	88.125	1729.79	94.125	1973.36	100.125	2232.96	106.125	2508.60
82.250	1506.84	88.250	1734.70	94.250	1978.60	100.250	2238.54	106.250	2514.51
82.375	1511.43	88.375	1739.62	94.375	1983.86	100.375	2244.13	106.375	2520.43
82.500	1516.02	88.500	1744.55	94.500	1989.11	100.500	2249.72	106.500	2526.36
82.625	1520.61	88.625	1749.48	94.625	1994.38	100.625	2255.32	106.625	2532.29
82.750	1525.22	88.750	1754.42	94.750	1999.65	100.750	2260.93	106.750	2538.24
82.875	1529.83	88.875	1759.36	94.875	2004.93	100.875	2266.54	106.875	2544.18
83.000	1534.45	89.000	1764.32	95.000	2010.22	101.000	2272.16	107.000	2550.14
83.125	1539.07	89.125	1769.27	95.125	2015.51	101.125	2277.79	107.125	2556.10
83.250	1543.71	89.250	1774.24	95.250	2020.81	101.250	2283.42	107.250	2562.07
83.375	1548.35	89.375	1779.21	95.375	2026.12	101.375	2289.06	107.375	2568.04
83.500	1552.99	89.500	1784.19	95.500	2031.43	101.500	2294.71	107.500	2574.03
83.625	1557.64	89.625	1789.18	95.625	2036.76	101.625	2300.37	107.625	2580.02
83.750	1562.30	89.750	1794.18	95.750	2042.08	101.750	2306.03	107.750	2586.01
83.875	1566.97	89.875	1799.18	95.875	2047.42	101.875	2311.70	107.875	2592.02
84.000	1571.65	90.000	1804.19	96.000	2052.76	102.000	2317.38	108.000	2598.03
84.125	1576.33	90.125	1809.20	96.125	2058.11	102.125	2323.06	108.125	2604.04
84.250	1581.01	90.250	1814.22	96.250	2063.47	102.250	2328.75	108.250	2610.07
84.375	1585.71	90.375	1819.25	96.375	2068.83	102.375	2334.45	108.375	2616.10
84.500	1590.41	90.500	1824.29	96.500	2074.20	102.500	2340.15	108.500	2622.14
84.625	1595.12	90.625	1829.33	96.625	2079.58	102.625	2345.86	108.625	2628.18
84.750	1599.84	90.750	1834.38	96.750	2084.96	102.750	2351.58	108.750	2634.24
84.875	1604.56	90.875	1839.44	96.875	2090.35	102.875	2357.31	108.875	2640.30
85.000	1609.29	91.000	1844.50	97.000	2095.75	103.000	2363.04	109.000	2646.36
85.125	1614.03	91.125	1849.57	97.125	2101.16	103.125	2368.78	109.125	2652.43
85.250	1618.77	91.250	1854.65	97.250	2106.57	103.250	2374.52	109.250	2658.51
85.375	1623.52	91.375	1859.73	97.375	2111.99	103.375	2380.28	109.375	2664.60
85.500	1628.28	91.500	1864.83	97.500	2117.41	103.500	2386.04	109.500	2670.70
85.625	1633.04	91.625	1869.92	97.625	2122.84	103.625	2391.80	109.625	2676.80
85.750	1637.81	91.750	1875.03	97.750	2128.28	103.750	2397.58	109.750	2682.90
85.875	1642.59	91.875	1880.14	97.875	2133.73	103.875	2403.36	109.875	2689.02

©Tubular Exchanger Manufacturers Association, Inc.

TABLE D-14
CHORD LENGTHS & AREAS OF CIRCULAR SEGMENTS

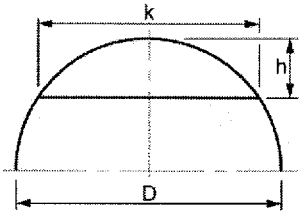

A = AREA
D = DIAMETER
h = HEIGHT
k = CHORD

$A = C \times D^2$

$k = 2[h(D-h)]^{1/2}$

h/D	C	h/D	C	h/D	C	h/D	C	h/D	C	h/D	C	h/D	C	h/D	C	h/D	C	h/D	C
0.001	0.00004	0.051	0.01512	0.101	0.04148	0.151	0.07459	0.201	0.11262	0.251	0.15441	0.301	0.19908	0.351	0.24593	0.401	0.29435	0.451	0.34378
0.002	0.00012	0.052	0.01556	0.102	0.04208	0.152	0.07531	0.202	0.11343	0.252	0.15528	0.302	0.20000	0.352	0.24689	0.402	0.29533	0.452	0.34477
0.003	0.00022	0.053	0.01601	0.103	0.04269	0.153	0.07603	0.203	0.11423	0.253	0.15615	0.303	0.20092	0.353	0.24784	0.403	0.29631	0.453	0.34577
0.004	0.00034	0.054	0.01646	0.104	0.04330	0.154	0.07675	0.204	0.11504	0.254	0.15702	0.304	0.20184	0.354	0.24880	0.404	0.29729	0.454	0.34676
0.005	0.00047	0.055	0.01691	0.105	0.04391	0.155	0.07747	0.205	0.11584	0.255	0.15789	0.305	0.20276	0.355	0.24976	0.405	0.29827	0.455	0.34776
0.006	0.00062	0.056	0.01737	0.106	0.04452	0.156	0.07819	0.206	0.11665	0.256	0.15876	0.306	0.20368	0.356	0.25071	0.406	0.29926	0.456	0.34876
0.007	0.00078	0.057	0.01783	0.107	0.04514	0.157	0.07892	0.207	0.11746	0.257	0.15964	0.307	0.20460	0.357	0.25167	0.407	0.30024	0.457	0.34975
0.008	0.00095	0.058	0.01830	0.108	0.04576	0.158	0.07965	0.208	0.11827	0.258	0.16051	0.308	0.20553	0.358	0.25263	0.408	0.30122	0.458	0.35075
0.009	0.00113	0.059	0.01877	0.109	0.04638	0.159	0.08038	0.209	0.11908	0.259	0.16139	0.309	0.20645	0.359	0.25359	0.409	0.30220	0.459	0.35175
0.010	0.00133	0.060	0.01924	0.110	0.04701	0.160	0.08111	0.210	0.11990	0.260	0.16226	0.310	0.20738	0.360	0.25455	0.410	0.30319	0.460	0.35274
0.011	0.00153	0.061	0.01972	0.111	0.04763	0.161	0.08185	0.211	0.12071	0.261	0.16314	0.311	0.20830	0.361	0.25551	0.411	0.30417	0.461	0.35374
0.012	0.00175	0.062	0.02020	0.112	0.04826	0.162	0.08258	0.212	0.12153	0.262	0.16402	0.312	0.20923	0.362	0.25647	0.412	0.30516	0.462	0.35474
0.013	0.00197	0.063	0.02068	0.113	0.04889	0.163	0.08332	0.213	0.12235	0.263	0.16490	0.313	0.21015	0.363	0.25743	0.413	0.30614	0.463	0.35573
0.014	0.00220	0.064	0.02117	0.114	0.04953	0.164	0.08406	0.214	0.12317	0.264	0.16578	0.314	0.21108	0.364	0.25839	0.414	0.30712	0.464	0.35673
0.015	0.00244	0.065	0.02166	0.115	0.05016	0.165	0.08480	0.215	0.12399	0.265	0.16666	0.315	0.21201	0.365	0.25936	0.415	0.30811	0.465	0.35773
0.016	0.00268	0.066	0.02215	0.116	0.05080	0.166	0.08554	0.216	0.12481	0.266	0.16755	0.316	0.21294	0.366	0.26032	0.416	0.30910	0.466	0.35873
0.017	0.00294	0.067	0.02265	0.117	0.05145	0.167	0.08629	0.217	0.12563	0.267	0.16843	0.317	0.21387	0.367	0.26128	0.417	0.31008	0.467	0.35972
0.018	0.00320	0.068	0.02315	0.118	0.05209	0.168	0.08704	0.218	0.12646	0.268	0.16932	0.318	0.21480	0.368	0.26225	0.418	0.31107	0.468	0.36072
0.019	0.00347	0.069	0.02366	0.119	0.05274	0.169	0.08779	0.219	0.12729	0.269	0.17020	0.319	0.21573	0.369	0.26321	0.419	0.31205	0.469	0.36172
0.020	0.00375	0.070	0.02147	0.120	0.05338	0.170	0.08854	0.220	0.12811	0.270	0.17109	0.320	0.21667	0.370	0.26418	0.420	0.31304	0.470	0.36272
0.021	0.00403	0.071	0.02468	0.121	0.05404	0.171	0.08929	0.221	0.12894	0.271	0.17198	0.321	0.21760	0.371	0.26514	0.421	0.31403	0.471	0.36372
0.022	0.00432	0.072	0.02520	0.122	0.05469	0.172	0.09004	0.222	0.12977	0.272	0.17287	0.322	0.21853	0.372	0.26611	0.422	0.31502	0.472	0.36471
0.023	0.00462	0.073	0.02571	0.123	0.05535	0.173	0.09080	0.223	0.13060	0.273	0.17376	0.323	0.21947	0.373	0.26708	0.423	0.31600	0.473	0.36571
0.024	0.00492	0.074	0.02624	0.124	0.05600	0.174	0.09155	0.224	0.13144	0.274	0.17465	0.324	0.22040	0.374	0.26805	0.424	0.31699	0.474	0.36671
0.025	0.00523	0.075	0.02676	0.125	0.05666	0.175	0.09231	0.225	0.13227	0.275	0.17554	0.325	0.22134	0.375	0.26901	0.425	0.31798	0.475	0.36771
0.026	0.00555	0.076	0.02729	0.126	0.05733	0.176	0.09307	0.226	0.13311	0.276	0.17644	0.326	0.22228	0.376	0.26998	0.426	0.31897	0.476	0.36871
0.027	0.00587	0.077	0.02782	0.127	0.05799	0.177	0.09384	0.227	0.13395	0.277	0.17733	0.327	0.22322	0.377	0.27095	0.427	0.31996	0.477	0.36971
0.028	0.00619	0.078	0.02836	0.128	0.05866	0.178	0.09460	0.228	0.13478	0.278	0.17823	0.328	0.22415	0.378	0.27192	0.428	0.32095	0.478	0.37071
0.029	0.00653	0.079	0.02889	0.129	0.05933	0.179	0.09537	0.229	0.13562	0.279	0.17912	0.329	0.22509	0.379	0.27289	0.429	0.32194	0.479	0.37171
0.030	0.00687	0.080	0.02943	0.130	0.06000	0.180	0.09613	0.230	0.13646	0.280	0.18002	0.330	0.22603	0.380	0.27386	0.430	0.32293	0.480	0.37270
0.031	0.00721	0.081	0.02998	0.131	0.06067	0.181	0.09690	0.231	0.13731	0.281	0.18092	0.331	0.22697	0.381	0.27483	0.431	0.32392	0.481	0.37370
0.032	0.00756	0.082	0.03053	0.132	0.06135	0.182	0.09767	0.232	0.13815	0.282	0.18182	0.332	0.22792	0.382	0.27580	0.432	0.32491	0.482	0.37470
0.033	0.00791	0.083	0.03108	0.133	0.06203	0.183	0.09845	0.233	0.13900	0.283	0.18272	0.333	0.22886	0.383	0.27678	0.433	0.32590	0.483	0.37570
0.034	0.00827	0.084	0.03163	0.134	0.06271	0.184	0.09922	0.234	0.13984	0.284	0.18362	0.334	0.22980	0.384	0.27775	0.434	0.32689	0.484	0.37670
0.035	0.00864	0.085	0.03219	0.135	0.06339	0.185	0.10000	0.235	0.14069	0.285	0.18452	0.335	0.23074	0.385	0.27872	0.435	0.32788	0.485	0.37770
0.036	0.00901	0.086	0.03275	0.136	0.06407	0.186	0.10077	0.236	0.14154	0.286	0.18542	0.336	0.23169	0.386	0.27969	0.436	0.32887	0.486	0.37870
0.037	0.00938	0.087	0.03331	0.137	0.06476	0.187	0.10155	0.237	0.14239	0.287	0.18633	0.337	0.23263	0.387	0.28067	0.437	0.32987	0.487	0.37970
0.038	0.00976	0.088	0.03387	0.138	0.06545	0.188	0.10233	0.238	0.14324	0.288	0.18723	0.338	0.23358	0.388	0.28164	0.438	0.33086	0.488	0.38070
0.039	0.01015	0.089	0.03444	0.139	0.06614	0.189	0.10312	0.239	0.14409	0.289	0.18814	0.339	0.23453	0.389	0.28262	0.439	0.33185	0.489	0.38170
0.040	0.01054	0.090	0.03501	0.140	0.06683	0.190	0.10390	0.240	0.14494	0.290	0.18905	0.340	0.23547	0.390	0.28359	0.440	0.33284	0.490	0.38270
0.041	0.01093	0.091	0.03559	0.141	0.06753	0.191	0.10469	0.241	0.14580	0.291	0.18996	0.341	0.23642	0.391	0.28457	0.441	0.33384	0.491	0.38370
0.042	0.01133	0.092	0.03616	0.142	0.06822	0.192	0.10547	0.242	0.14666	0.292	0.19086	0.342	0.23737	0.392	0.28554	0.442	0.33483	0.492	0.38470
0.043	0.01173	0.093	0.03674	0.143	0.06892	0.193	0.10626	0.243	0.14751	0.293	0.19177	0.343	0.23832	0.393	0.28652	0.443	0.33582	0.493	0.38570
0.044	0.01214	0.094	0.03732	0.144	0.06963	0.194	0.10705	0.244	0.14837	0.294	0.19268	0.344	0.23927	0.394	0.28750	0.444	0.33682	0.494	0.38670
0.045	0.01255	0.095	0.03791	0.145	0.07033	0.195	0.10784	0.245	0.14923	0.295	0.19360	0.345	0.24022	0.395	0.28848	0.445	0.33781	0.495	0.38770
0.046	0.01297	0.096	0.03850	0.146	0.07103	0.196	0.10864	0.246	0.15009	0.296	0.19451	0.346	0.24117	0.396	0.28945	0.446	0.33880	0.496	0.38870
0.047	0.01339	0.097	0.03909	0.147	0.07174	0.197	0.10943	0.247	0.15095	0.297	0.19542	0.347	0.24212	0.397	0.29043	0.447	0.33980	0.497	0.38970
0.048	0.01382	0.098	0.03968	0.148	0.07245	0.198	0.11023	0.248	0.15182	0.298	0.19634	0.348	0.24307	0.398	0.29141	0.448	0.34079	0.498	0.39070
0.049	0.01425	0.099	0.04028	0.149	0.07316	0.199	0.11102	0.249	0.15268	0.299	0.19725	0.349	0.24403	0.399	0.29239	0.449	0.34179	0.499	0.39170
0.050	0.01468	0.100	0.04087	0.150	0.07387	0.200	0.11182	0.250	0.15355	0.300	0.19817	0.350	0.24498	0.400	0.29337	0.450	0.34278	0.500	0.39270

©Tubular Exchanger Manufacturers Association, Inc.

TABLE D-15

CONVERSION FACTORS

LENGTH

MULTIPLY	BY	TO OBTAIN
Inches	2.540	Centimeters
Inches	25.40	Millimeters
Feet	30.48	Centimeters
Feet	0.3048	Meters
Yards	0.9144	Meters
Miles	1.6094	Kilometers

AREA

MULTIPLY	BY	TO OBTAIN
Square Inches	6.4516	Square Centimeters
Square Feet	929.034	Square Centimeters
Square Feet	0.0929034	Square Meters
Square Inches	0.00064516	Square Meters

VOLUME

MULTIPLY	BY	TO OBTAIN
Cubic Inches	16.387162	Cubic Centimeters
Cubic Feet	0.028316	Cubic Meters
Cubic Feet	28.316	Liters
Gallons (U. S. Liq.)	3.7853	Liters
Gallons (Imp.)	4.54509	Liters
Barrels (U. S.)	0.1589873	Cubic Meters
Gallons (U. S. Liq.)	0.003785	Cubic Meters

MASS

MULTIPLY	BY	TO OBTAIN
Ounces (AV.)	28.3495	Grams
Pounds (AV.)	453.592	Grams
Pounds (AV.)	0.453592	Kilograms

DENSITY

MULTIPLY	BY	TO OBTAIN
Pounds Per Cubic Inch	27.680	Grams Per Cubic Centimeter
Pounds Per Cubic Foot	16.01846	Kilograms Per Cubic Meter
Pounds Per Cubic Foot	16.01794	Grams Per Liter
Pounds Per Gallon (U. S. Liq.)	0.119826	Kilograms Per Liter

VELOCITY

MULTIPLY	BY	TO OBTAIN
Feet Per Second	0.30480	Meters Per Second
Feet Per Minute	0.00508	Meters Per Second

FORCE

MULTIPLY	BY	TO OBTAIN
Pounds-Force	0.004448	Kilonewtons

 ©Tubular Exchanger Manufacturers Association, Inc.

TABLE D-15 (Continued)

CONVERSION FACTORS

VISCOSITY

MULTIPLY	BY	TO OBTAIN
Pounds Per Foot-Hour	0.4133	Centipoises
Pounds Per Foot-Hour	0.00004215	Kilogram-Second Per Square Meter
Pounds Per Foot-Second	1488.16	Centipoises
Pounds Per Foot-Second	0.1517	Kilogram-Second Per Square Meter
Square Feet Per Second	92903.04	Centistokes
Pound-Second Per Square Foot	47900	Centipoises
Kilogram-Second Per Square Meter	9806.65	Centipoises

TEMPERATURE

MULTIPLY	BY	TO OBTAIN
Degrees Fahrenheit	Subtract 32 and Divide by 1.8	Degrees Centigrade
Degrees Rankine	Divide by 1.8	Degrees Kelvin
Degrees Fahrenheit	Add 459.67 and Divide by 1.8	Degrees Kelvin

PRESSURE

MULTIPLY	BY	TO OBTAIN
Pounds Per Square Inch	0.070307	Kilograms Per Square Centimeter
Pounds Per Square Foot	4.8828	Kilograms Per Square Meter
Pounds Per Square Inch	6894.76	Newtons Per Square Meter
Pounds Per Square Inch	0.06894	Bars
Pounds Per Square Inch	6894.76	Pascals
Inches of Hg	0.03453	Kilograms Per Square Centimeter
Pounds Per Square Inch	6.8947	Kilopascals

FLOW RATE

MULTIPLY	BY	TO OBTAIN
Gallons Per Minute (U. S. Liq.)	0.00006309	Cubic Meters Per Second
Pounds Per Hour	0.0001260	Kilograms Per Second
Cubic Feet Per Minute	1.699011	Cubic Meters Per Hour
Pounds Per Minute	0.007559	Kilograms Per Second

SPECIFIC VOLUME

MULTIPLY	BY	TO OBTAIN
Cubic Feet Per Pound	0.062428	Cubic Meters Per Kilogram
Gallons Per Pound (U.S. Liq.)	8.3454	Liters Per Kilogram

ENERGY & POWER

MULTIPLY	BY	TO OBTAIN
BTU	1055.06	Joules
BTU	0.2520	Kilocalories
BTU	0.000252	Thermies
Foot Pound	1.3558	Joules
BTU Per Hour	0.29307	Watts

 ©Tubular Exchanger Manufacturers Association, Inc.

TABLE D-15 (Continued)

CONVERSION FACTORS

ENTROPY

MULTIPLY	BY	TO OBTAIN
BTU Per Pound-°F	4.1868	Joules Per Gram-° C

ENTHALPY

MULTIPLY	BY	TO OBTAIN
BTU Per Pound	2.326	Joules Per Gram

SPECIFIC HEAT

MULTIPLY	BY	TO OBTAIN
BTU Per Pound-°F	4.1868	Joules Per Gram-° C

HEAT TRANSFER

MULTIPLY	BY	TO OBTAIN
BTU Per Hour-Square Foot-°F	5.67826	Watts Per Square Meter-° C
BTU Per Square Foot-Hour	3.15459	Watts Per Square Meter
BTU Per Square Foot-Hour	2.71246	Kilocalories Per Square Meter-Hour
BTU Per Square Foot-Hour-°F	4.88243	Kilocalories Per Square Meter-Hour-°C

THERMAL CONDUCTIVITY

MULTIPLY	BY	TO OBTAIN
BTU Per Foot-Hour. °F	1.7307	Watts Per Meter-° C
BTU Per Square Foot-Hour-°F Per Inch	0.14422	Watts Per Meter-° C
BTU Per Square Foot-Hour-°F Per Inch	0.1240	Kilocalories Per Square Meter-Hour °C Per Meter
BTU Per Square Foot-Hour °F Per Foot	1.488	Kilocalories Per Square Meter-Hour °C Per Meter
BTU Per Square Foot-Hour °F Per Foot	0.01731	Watts Per Square Centimeter-Hour °C Per Centimeter
Calories Per Second Square Centimeter °C per Centimeter	360	Kilocalories Per Square Meter-Hour °C Per Meter
Calories Per Second Square Centimeter °C per Centimeter	4.187	Watts Per Square Centimeter-Hour °C Per Centimeter
Kilocalories Per Square Meter-Hour °C Per Meter	0.01163	Watts Per Square Centimeter-Hour °C Per Centimeter

FOULING RESISTANCE

MULTIPLY	BY	TO OBTAIN
Hour-Square Foot-°F Per BTU	176.1102	Square Meter-° C Per Kilowatt
Hour-Square Foot-°F Per BTU	0.2048	Square Meter- Hour ° C Per Kilocalorie

MASS VELOCITY

MULTIPLY	BY	TO OBTAIN
Pounds Per Hour-Square Foot	0.0013562	Kilograms Per Square Meter-Second

HEATING VALUE

MULTIPLY	BY	TO OBTAIN
BTU Per Cubic Foot	0.037259	Megajoules Per Cubic Meter

 ©Tubular Exchanger Manufacturers Association, Inc.

TABLE D-16 CONVERSION TABLES FOR WIRE AND SHEET METAL GAGES

Values in approximate decimals of an inch.

As a number of gages are in use for various shapes and metals, it is advsiable to state the thickness in thousandths when specifying gage number.

Gage number	American (A.W.G) or Brown and Sharpe (B. & S.) (for non-ferrous wire and sheet) (1)	U.S. Steel wire (S.W.G.) or Washburn and Moen or Roebling or Am. Steel and Wire Co. [A. (Steel) W.G.] (for steel wire)	Birmingham (B.W.G.) (for steel wire) or Stubs Iron Wire (for iron or brass wire) (2)	U.S. Standard (for sheet and plate metal, wrought iron)	Standard Birmingham (B.G.) (for sheet and hoop metal)	Imperial Standard Wire Gage (S.W.G.) (British legal standard)	Gage number
0000000		0.4900		0.5000	0.6666	0.500	0000000
000000		0.4615		0.4690	0.6250	0.464	000000
00000		0.4305		0.4380	0.5883	0.432	00000
0000	0.460	0.3938	0.454	0.4060	0.5416	0.400	0000
000	0.410	0.3625	0.425	0.3750	0.5000	0.372	000
00	0.365	0.3310	0.380	0.3440	0.4452	0.348	00
0	0.325	0.3065	0.340	0.3120	0.3964	0.324	0
1	0.289	0.2830	0.300	0.2810	0.3532	0.300	1
2	0.258	0.2625	0.284	0.2660	0.3147	0.276	2
3	0.229	0.2437	0.259	0.2500	0.2804	0.252	3
4	0.204	0.2253	0.238	0.2340	0.2500	0.232	4
5	0.182	0.2070	0.220	0.2190	0.2225	0.212	5
6	0.162	0.1920	0.203	0.2030	0.1981	0.192	6
7	0.144	0.1770	0.180	0.1880	0.1764	0.176	7
8	0.128	0.1620	0.165	0.1720	0.1570	0.160	8
9	0.114	0.1483	0.148	0.1560	0.1398	0.144	9
10	0.102	0.1350	0.134	0.1410	0.1250	0.128	10
11	0.091	0.1205	0.120	0.1250	0.1113	0.116	11
12	0.081	0.1055	0.109	0.1090	0.0991	0.104	12
13	0.072	0.0915	0.095	0.0940	0.0882	0.092	13
14	0.064	0.0800	0.083	0.0780	0.0785	0.080	14
15	0.057	0.0720	0.072	0.0700	0.0699	0.072	15
16	0.051	0.0625	0.065	0.0620	0.0625	0.064	16
17	0.045	0.0540	0.058	0.0560	0.0556	0.056	17
18	0.040	0.0475	0.049	0.0500	0.0495	0.048	18
19	0.036	0.0410	0.042	0.0438	0.0440	0.040	19
20	0.032	0.0348	0.035	0.0375	0.0392	0.036	20
21	0.0285	0.0317	0.032	0.0344	0.0349	0.032	21
22	0.0253	0.0286	0.028	0.0312	0.0313	0.028	22
23	0.0226	0.0258	0.025	0.0281	0.0278	0.024	23
24	0.0201	0.0230	0.022	0.0250	0.0248	0.022	24
25	0.0179	0.0204	0.020	0.0219	0.0220	0.020	25
26	0.0159	0.0181	0.018	0.0188	0.0196	0.018	26
27	0.0142	0.0173	0.016	0.0172	0.0175	0.0164	27
28	0.0126	0.0162	0.014	0.0156	0.0156	0.0148	28
29	0.0113	0.0150	0.013	0.0141	0.0139	0.0136	29
30	0.0100	0.0140	0.012	0.0125	0.0123	0.0124	30
31	0.0089	0.0132	0.010	0.0109	0.0110	0.0116	31
32	0.0080	0.0128	0.009	0.0102	0.0098	0.0108	32
33	0.0071	0.0118	0.008	0.0094	0.0087	0.0100	33
34	0.0063	0.0104	0.007	0.0086	0.0077	0.0092	34
35	0.0056	0.0095	0.005	0.0078	0.0069	0.0084	35
36	0.0050	0.0090	0.004	0.0070	0.0061	0.0076	36
37	0.0045	0.0085		0.0066	0.0054	0.0068	37
38	0.0040	0.0080		0.0062	0.0048	0.0060	38
39	0.0035	0.0075			0.0043	0.0052	39
40	0.0031	0.0070			0.0039	0.0048	40
41		0.0066			0.0034	0.0044	41
42		0.0062			0.0031	0.0040	42
43		0.0060			0.0027	0.0036	43
44		0.0058			0.0024	0.0032	44
45		0.0055			0.0022	0.0028	45
46		0.0052			0.0019	0.0024	46
47		0.0050			0.0017	0.0020	47
48		0.0048			0.0015	0.0016	48
49		0.0046			0.0014	0.0012	49
50		0.0044			0.0012	0.0010	50

METRIC WIRE GAGE is ten times the diameter in millimeters.
(1) Sometimes used for iron wire.
(2)Sometimes used for copperplate and for plate 12 gage and heavier and for steel tubes.

©Tubular Exchanger Manufacturers Association, Inc.

RECOMMENDED GOOD PRACTICE
RGP SECTION

This section of the TEMA Standards provides the designer with additional information and guidance relative to the design of shell and tube heat exchangers not covered by the scope of the main sections of the Standards. The title of this section, "Recommended Good Practice", indicates that the information should be considered, but is not a requirement of the basic Standards.

When a paragraph in this section (RGP) is followed by an R, C, and/or B, this RGP paragraph is an extension or amplification of a like numbered paragraph in the RCB section of the main Standards. Similarly, other suffix designations following RGP indicate other applicable sections of the main Standards.

 ©Tubular Exchanger Manufacturers Association, Inc.

RGP-G-7.1.1 HORIZONTAL VESSEL SUPPORTS

This section considers horizontal heat exchangers or a stack of heat exchangers with two supports centered under the cylinder axis and spacing along the length for near-as-practical weight balance. Each support is fully welded and may incorporate one base plate, one web plate, rib plate(s), anchor bolts and one saddle pad. Other configurations are acceptable with appropriate considerations.

Horizontal supports are to be designed to withstand all known loadings, as described in RGP-G-7.1.1.1. RGP-G-7.1.1.2 presents an approach to develop a support structure which can accept known loadings. RGP-G-7.1.1.3 presents an approach to develop support attachment to the exchanger which can accept known loadings by tailoring L.P. Zick evaluations to shell and tube heat exchangers. Many users have pre-existing design systems that address these considerations in an acceptable manner which is not to be superseded by the method herein.

This method may be used to evaluate the support system including external loads such as structural and piping loads. This method is not intended for use with full loadings from standardized nozzle loads (table loads) which do not contain specific direction and combination information. The exchanger is not to be considered a piping anchorage.

RGP-G-7.1.1.1 APPLIED LOADS AND LOAD COMBINATIONS

In the following section, the terms p_x, p_y, p_z, m_x, m_y, and m_z are generalized terms for all non-pressure loads that act upon the heat exchanger. These include, but are not limited to, dead weight, piping loads, wind loads, seismic loads and self-straining force.

Simultaneous loads in a load case should be summed appropriately in the equations of G-7.1.1.2 with proper consideration of their direction(s) and location of action.

In the diagrams below, the loads are shown as being applied between the front and rear support. This is not a requirement. When loads are applied outside of the supports, the location terms shall be adjusted accordingly. As an example, if p_y is outside of the front support, L_{yf} would be negative and L_{yr} would be greater than L_s. By this, the formulas given for distribution of p_x, p_y and p_z to the front and rear supports remains valid. Because one of the location terms is negative and to avoid incorrect cancelling of loads, during the summation either the signs should be carefully observed or absolute values should be used.

When units are stacked, each support must include all superimposed loadings of the unit(s) above it.

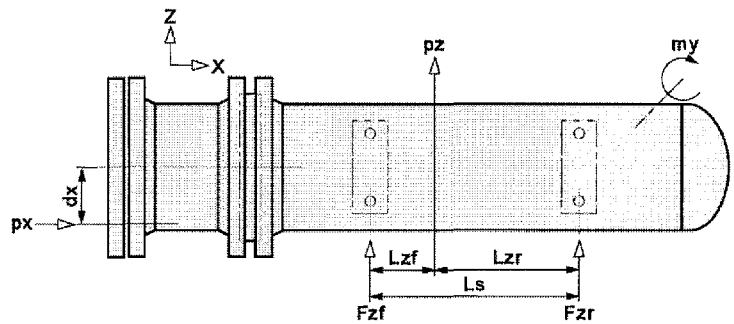

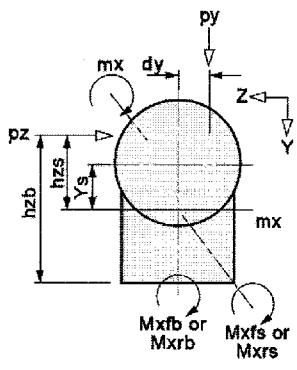

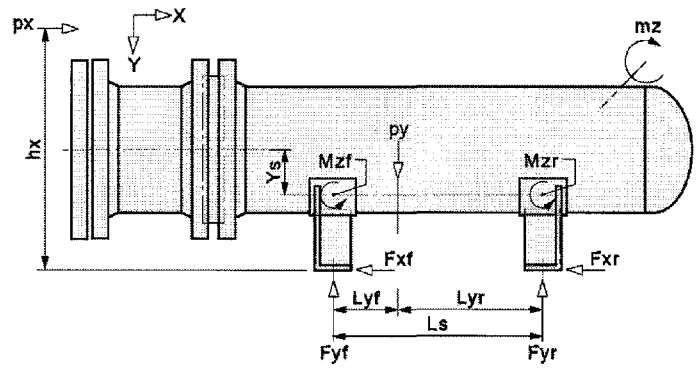

 ©Tubular Exchanger Manufacturers Association, Inc.

In the following sections, postscripts *f* and *r* added to the end of individual support variables indicate front and rear support respectively.

X-direction

Singular force acting in longitudinal x-direction:	p_x
Examples: bundle extraction/insertion, nozzle loads (VL), wind, seismic, transportation	
Vertical distance from p_x to the base plate of the support considered:	h_x
Transverse (z-direction) distance from p_x to the cylinder centerline:	d_x
Singular moment acting about x-axis:	m_x
Examples: nozzle moments (MC)	
Longitudinal force acting on each support:	F_{xf}, F_{xr}
Bending moment acting on each support at the support plane from overturning loads:	M_{xfs}, M_{xrs}
Bending moment acting on each support at the base plate plane from overturning loads:	M_{xfb}, M_{xrb}
Friction factor between base plate and foundation or slide plate:	f_b

Y-direction

Singular force load acting in vertical y-direction:	p_y
Examples: weight loads, nozzle loads (P), seismic, transportation	
Transverse (z-direction) distance from p_y to the cylinder centerline:	d_y
Singular moment acting about y-axis:	m_y
Examples: nozzle moments (MT)	
Distance along x-axis from p_y to center of each individual support:	L_{yf}, L_{yr}
Vertical force acting on individual support:	F_{yf}, F_{yr}

Note: Torsion acting on each support is considered to be zero as the supports are flexible in torsion and the moments about the vertical axis are taken as opposite forces on the front and rear supports.

Z-direction

Singular force acting along transverse z-axis:	p_z
Examples: nozzle loads (VC), wind, seismic, transportation	
Vertical distance from p_z to the attachment of the support considered:	h_{zs}
The attachment point is to be considered at Ys from the cylinder centerline.	
Vertical distance from p_z to the base plate of the support considered:	h_{zb}
Singular moment acting about z-axis:	mz
Examples: nozzle moments (ML)	
Distance along x-axis from p_z to each individual support:	L_{zf}, L_{zr}
Transverse force acting on individual support:	F_{zf}, F_{zr}
Bending moment acting on each support at the support plane from F_{xf}, F_{xr}:	M_{zf}, M_{zr}

Note: The bending moment acting on each support at the base plate plane about the z-direction is considered to be zero as the base plate is narrow and flexible in this direction.

 ©Tubular Exchanger Manufacturers Association, Inc.

RGP-G-7.1.1.2 SUPPORT STRUCTURE DESIGN

RGP-G-7.1.1.2.1 SUPPORT STRUCTURE FEATURES AND VARIABLES

The support structure is symmetric about the cylinder x-axis and made up of a web normal to the x-axis and one or more rib plates oriented normal to the z-axis. If alternate structure geometries are used, they should be able to resist the loadings defined in RGP-G-7.1.1.1 in accordance with good engineering practices.

The saddle pad is the contoured plate between the support structure and a cylinder. The saddle pad reduces rib and web induced stresses in the cylinder and offers a differentiation location between structural and pressure vessel design rules. This feature may be omitted if warranted by design.

The support attachment is considered the plane normal to the y-axis the distance Ys from the cylinder centerline. This plane is at the elevation of the centroid of the saddle pad arc or cylinder attachment arc (when no pad exists). For conservative simplification of the evaluation, ribs and webs are calculated as if to terminate at this plane with cross-section dimensions matching that at the welded junction of the saddle pad (or cylinder). In the case of a support with only two ribs, the ribs should be installed such that their intersection with the pad (or cylinder) is closer to the base plate than the support attachment plane or the plane should be moved to the rib intersection.

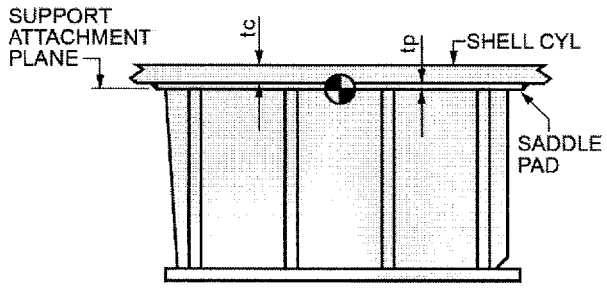

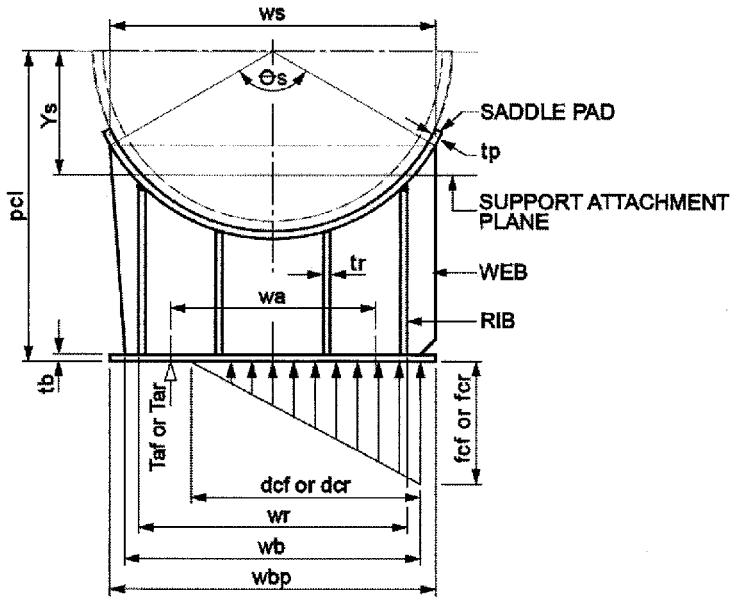

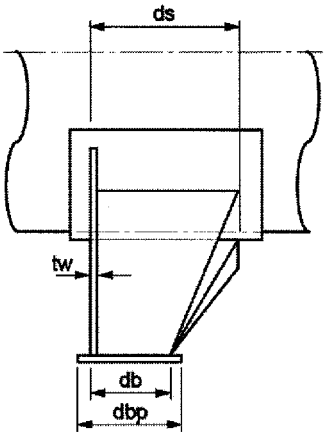

 ©Tubular Exchanger Manufacturers Association, Inc.

Projection of base plate from cylinder centerline:	p_{cl}
Distance in x-direction between the centerline of each support:	L_s
Cross-sectional area of support at support attachment at plane perpendicular to the y-axis:	A_s
Cross-sectional area of support at base plate at plane perpendicular to the y-axis:	A_b
Cross-sectional area of each rib plate at smallest section at a plane perpendicular to the y-axis:	A_r
Thickness of support rib(s):	t_r
Number of support rib(s):	n_r
Depth (length in x-direction) of support at support attachment:	d_s
Depth (length in x-direction) of support at base plate:	d_b
Depth (length in x-direction) of base plate:	d_{bp}
Cross-sectional area of web plate at smallest section in horizontal plane:	A_w
Thickness of support web:	t_w
Width (length in z-direction) of support at support attachment:	w_s
Width (length in z-direction) of support at base plate:	w_b
Width (length in z-direction) of the outermost rib plates:	w_r
Width (length in z-direction) of base plate:	w_{bp}
Second moment of area of support cross-section about the neutral axis parallel to the x-axis at support attachment:	I_{xs}
Second moment of area of support cross-section about the neutral axis parallel to the x-axis at base plate:	I_{xb}
Second moment of area of support cross-section about the neutral axis parallel to the z-axis at support attachment:	I_z
First moment of area of web cross-section about the neutral axis parallel to the z-axis at support attachment:	Q_{wz}
Distance from rib edge to neutral axis of support cross-section parallel to the z-axis at support attachment:	c_{rz}
Distance from web centerline to neutral axis of support cross-section parallel to the z-axis at support attachment:	c_{wz}
Thickness of saddle pad:	t_p
Weld leg length attaching ribs to saddle pad:	l_r
Weld leg length attaching web to saddle pad:	l_w
Weld leg length attaching ribs to webs:	l_{rw}
Weld leg length attaching ribs and webs to base plate:	l_b
Weld leg length attaching pad to shell cylinder:	l_p
Outside diameter of shell cylinder:	D_o
Thickness of the shell cylinder (minimum, fully corroded state):	t_c
Bearing angle of the support to saddle pad interface (radians):	θ_s

This value may be found by: $2arcsin(w_s/(D_o+2t_p))$
with a maximum of π (radians)

 ©Tubular Exchanger Manufacturers Association, Inc.

Distance from centerline to centroid of support attachment:	Y_s
This value may be found by: $sin(\theta_s/2)(D_o+2t_p)/\theta_s$	
Thickness of base plate (minimum thickness = t_w):	t_b
Number of anchor bolts/studs per support:	n_a
Number of anchor bolts/studs resisting overturn at w_a (typically $n_a/2$):	n_o
Anchor bolt/stud root area (for each stud):	A_a
Distance (in z-direction) between outermost anchor bolts/studs:	w_a
Tension force in each anchor stud/bolt from pre-tensioning/torquing: Assume zero when not specified (tightened to flush-only)	T_p
Total tension force in each anchor during overturning events:	T_{af}, T_{ar}
Peak compressive force on base plate distributed along dcf , dcr:	f_{cf}, f_{cr}
Compressed foundation width (length in the z-direction)	d_{cf}, d_{cr}
Modulus of elasticity of support structure (or specific part considered):	E_s
Modulus of elasticity of anchor studs/bolts:	E_a
Modulus of elasticity of foundation material in contact with base plate:	E_c
Yield strength of support feature (rib, web, base plate or saddle pad):	S_{ys}
Yield strength of weld defined as lowest strength of joined parts:	S_{yw}
Pressure vessel code allowable tensile stress of support feature:	S_s
Pressure vessel code allowable tensile stress for cylinder at support:	S_c
Filler metal AWS classification strength used in support fabrication:	F_{exx}

RGP-G-7.1.1.2.2 SUPPORT STRUCTURE STRESS DETERMINATION & EVALUATION

In the summations given below, the appropriate load factors from the structural code are to be used.

A - Vertical compressive forces (F_{yf}, F_{yr}) result at each support according to the following equations for each load case:

$$F_{yf} = \frac{\sum p_y L_{yr} \pm \sum p_x h_x \pm \sum m_z}{L_s} \qquad F_{yr} = \frac{\sum p_y L_{yf} \pm \sum p_x h_x \pm \sum m_z}{L_s}$$

Compressive stress from vertical forces at the base plate and support attachment locations can be found by the following equations:

$$\sigma_{yfs} = \frac{F_{yf}}{A_s} \qquad \sigma_{yrs} = \frac{F_{yr}}{A_s}$$

$$\sigma_{yfb} = \frac{F_{yf}}{A_b} \qquad \sigma_{yrb} = \frac{F_{yr}}{A_b}$$

These stresses shall be considered in combination with stresses from overturning and longitudinal moments in section G, below.

B - Longitudinal shear forces (F_{xf}, F_{xr}) may be considered accepted solely by the support with anchor bolt holes (fixed support) without the resistance of the support with slotted holes (sliding support) except frictional forces at the sliding support must be accepted by

 ©Tubular Exchanger Manufacturers Association, Inc.

both supports. When the front support is fixed, the longitudinal forces are distributed to each support according to the following equations for each load case:

For load combinations that include thermal loadings (operating, etc.):

$$F_{xf} = \sum p_x + F_{xr} \qquad F_{xr} = F_{yr} f_b$$

For other load combinations:

$$F_{xf} = \sum p_x \qquad F_{xr} = F_{yr} f_b$$

Shear stress from longitudinal forces can be found by the following equations:

$$\tau_{xf} = \frac{F_{xf}}{A_r n_r} \qquad \tau_{xr} = \frac{F_{xr}}{A_r n_r}$$

τ_{xf} and τ_{xr} should be less than $0.4S_{ys}$ for supports with a saddle pad or $min[0.4S_{ys}, 0.8S_c, 0.8S_s]$ for supports without a saddle pad in operating cases.

C - Transverse shear forces (F_{zf}, F_{zr}) result at each support according to the following equations for each load case:

$$F_{zf} = \frac{\sum p_z L_{zr} \pm \sum p_x d_x \pm \sum m_y}{L_s} \qquad F_{zr} = \frac{\sum p_z L_{zf} \pm \sum p_x d_x \pm \sum m_y}{L_s}$$

Shear stress from transverse forces can be found by the following equations:

$$\tau_{zf} = F_{zf} / A_w \qquad \tau_{zr} = F_{zr} / A_w$$

τ_{zf} and τ_{zr} should be less than $0.4S_{ys}$ for supports with a saddle pad or $min[0.4S_{ys}, 0.8S_c, 0.8S_s]$ for supports without a saddle pad in operating cases.

D - Overturning moments (about the longitudinal axis) are considered to be shared equally by each support ($M_{xfs}/M_{xrs}/M_{xfb}/M_{xrb}$) when anchor bolts are tightened to flush or tighter on each end. If anchor bolts for both supports are tightened or uplift on the free support will not occur (ie: $[e_f, e_r] \leq wb/6$) then $m_{ff} = 2$ and, $m_{fr} = 2$. If the free support may uplift (ie: $e_r > w_b/6$) then $m_{ff} = 1$ for the tightened support and $m_{fr} = 2$ for the free support. The formulas for e_f and e_r are given in section E, below. Each load case may have different values for m_{ff} and m_{fr}. Note that overturning evaluations should be performed at both the base plate (postscript "b") and the support attachment (postscript "s"). The overturning moment on each support can be found at the base plate and support attachment locations by the following equation for each load case:

$$M_{xfs} = \frac{\sum p_z h_{zs} \pm \sum p_y d_y \pm \sum m_x}{m_{ff}} \qquad M_{xrs} = \frac{\sum p_z h_{zs} \pm \sum p_y d_y \pm \sum m_x}{m_{fr}}$$

$$M_{xfb} = \frac{\sum p_z h_{zb} \pm \sum p_y d_y \pm \sum m_x}{m_{ff}} \qquad M_{xrb} = \frac{\sum p_z h_{zb} \pm \sum p_y d_y \pm \sum m_x}{m_{fr}}$$

After determining M_{xfs}, M_{xfb}, M_{xrs} and M_{xrb}, verify that the assumptions for m_{ff} and m_{fr} are valid by calculating e_f and e_r (see section E) and comparing to limits above.

 ©Tubular Exchanger Manufacturers Association, Inc.

Overturning bending stress in the support can be evaluated by the following equations:

$$\sigma_{xfs} = \frac{M_{xfs}\, w_s}{2I_{xs}} \qquad \sigma_{xrs} = \frac{M_{xrs}\, w_s}{2I_{xs}}$$

$$\sigma_{xfb} = \frac{M_{xfb}\, w_b}{2I_{xb}} \qquad \sigma_{xrb} = \frac{M_{xrb}\, w_b}{2I_{xb}}$$

Overturning bending stress in the outermost ribs at the support attachment can be evaluated by the following equations:

$$\sigma_{xrfs} = \frac{M_{xfs}\, w_r}{2I_{xs}} \qquad \sigma_{xrrs} = \frac{M_{xrs}\, w_r}{2I_{xs}}$$

E – Base plate and support structure loads are determined by considering the interaction between overturning moments, vertical loads, foundation bearing loads and anchor loads. The peak compressive foundation load per unit width (f_{cf}, f_{cr}), width in compressive contact with the foundation (d_{cf}, d_{cr}), and anchor bolt tension exceeding T_p (T_f, T_r) can be found by the following calculation procedure:

Begin by calculating the overturning moment to dead weight eccentricity factor:

$$e_f = \frac{M_{xfb}}{F_{yf} + T_p n_a} \qquad e_r = \frac{M_{xrb}}{F_{yr} + T_p n_a}$$

If e_f and e_r are ≤ $w_b/6$, then d_{cf} and d_{cr} equal w_b, T_f and T_r are zero, and f_{cf} and f_{cr} can be found by the following equations:

$$f_{cf} = \frac{\left(F_{yf} + T_p n_a\right)\left(1 + \frac{6e_f}{w_b}\right)}{w_b} \qquad f_{cr} = \frac{\left(F_{yr} + T_p n_a\right)\left(1 + \frac{6e_r}{w_b}\right)}{w_b}$$

If e_f or e_r are > $w_b/6$, then d_{cf}, d_{cr}, T_f, T_r, f_{cf}, and f_{cr} can be found by the following equations:

Step 1: calculate anchor bolt resistance factor (f_f, f_r):

$$f_f = 6A_a n_o E_a \left(\frac{\frac{w_a}{2} + e_f}{E_c d_{bp}} \right) \qquad f_r = 6A_a n_o E_a \left(\frac{\frac{w_a}{2} + e_r}{E_c d_{bp}} \right)$$

Step 2: solve z equations below to find $z = 0$ by iterating down d_{cf} and d_{cr} starting at w_b:

$$d_{cf}^3 + 3d_{cf}^2\left(e_f - \frac{w_b}{2}\right) + f_f d_{cf} - f_f\left(\frac{w_a}{2} + \frac{w_b}{2}\right) = z$$

$$d_{cr}^3 + 3d_{cr}^2\left(e_r - \frac{w_b}{2}\right) + f_r d_{cr} - f_r\left(\frac{w_a}{2} + \frac{w_b}{2}\right) = z$$

 ©Tubular Exchanger Manufacturers Association, Inc.

Step 3: use d_{cf} and d_{cr} found in step 2 to calculate T_f and T_r, T_{af} and T_{ar}, and f_{cf} and f_{cr}:

$$T_f = \frac{\left(F_{yf} + T_p n_a\right)\left(e_f - \frac{w_b}{2} + \frac{d_{cf}}{3}\right)}{n_o\left(\frac{w_a}{2} + \frac{w_b}{2} - \frac{d_{cf}}{3}\right)}$$

$$T_r = \frac{\left(F_{yr} + T_p n_a\right)\left(e_r - \frac{w_b}{2} + \frac{d_{cr}}{3}\right)}{n_o\left(\frac{w_a}{2} + \frac{w_b}{2} - \frac{d_{cr}}{3}\right)}$$

$$T_{af} = T_f + T_p$$

$$T_{ar} = T_r + T_p$$

$$f_{cf} = \frac{2\left(F_{vf} + T_p n_a + T_f n_o\right)}{d_{cf}}$$

$$f_{cr} = \frac{2\left(F_{vr} + T_p n_a + T_r n_o\right)}{d_{cr}}$$

The peak force distribution is conservatively considered accepted by the web alone with limited distributions through the base plate, so the resulting compressive stress in the web can be evaluated by the following equations:

$$\sigma_{bf} = \frac{f_{cf} d_{cf}}{t_w (d_{cf} + t_b)}$$

$$\sigma_{br} = \frac{f_{cr} d_{cr}}{t_w (d_{cr} + t_b)}$$

The resulting compressive stress in the foundation from the base plate can be evaluated by the following equations when the base plate is not also designed per RGP-G-7.1.1.2.3:

$$\sigma_{cf} = \frac{f_{cf}}{t_w + t_b + l_b + min\left[\frac{\left(d_{bp} - d_b\right)}{2}, t_b + l_b\right]}$$

$$\sigma_{cr} = \frac{f_{cr}}{t_w + t_b + l_b + min\left[\frac{\left(d_{bp} - d_b\right)}{2}, t_b + l_b\right]}$$

If the foundation cannot accept σ_{cf} and σ_{cr} directly without reasonable increases to l_b and/or t_b, the base plate bending stress from bearing loads should be evaluated per RGP-G-7.1.1.2.3 in addition to the following evaluation of T_{af} and T_{ar} to prove the base plate can distribute the stress. Similar additional evaluations for localized base plate loadings from shipping and handling may also be warranted for otherwise lightly loaded supports.

 ©Tubular Exchanger Manufacturers Association, Inc.

The base plate bending stress resulting from T_{af} and T_{ar} is conservatively evaluated by the following equations where dT_f or dT_r is the least distances from the anchor(s) resisting overturn to the nearest rib, nearest web (only when $w_b > (w_a + d_{bp})$), or foundation contact (see sketches below and note the minimum value of zero can exist when $[e_f, e_r] \le \frac{w_b}{6}$):

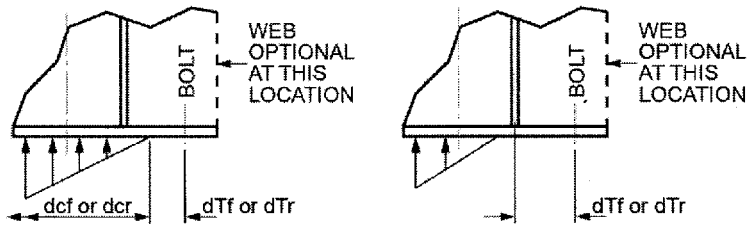

If $w_r < w_a$, then:

$$\sigma T_{af} = \frac{6T_{af} n_o d_{Tf}}{d_{bp} t_b^2} \qquad \sigma T_{ar} = \frac{6T_{ar} n_o d_{Tr}}{d_{bp} t_b^2}$$

If $w_r > w_a$, then:

$$\sigma T_{af} = \frac{3T_{af} n_o d_{Tf}}{d_{bp} t_b^2} \qquad \sigma T_{ar} = \frac{3T_{ar} n_o d_{Tr}}{d_{bp} t_b^2}$$

σT_{af}, σT_{ar} should be less than $0.75S_{ys}$.

The tensile stress developed in the support from T_{af} and T_{ar} can be conservatively evaluated by the following equations:

If $[T_f, T_r] = 0$, then $[\sigma T_f, \sigma T_r] = 0$

If $w_r < w_a$ and $w_b > w_a$ and $[T_f, T_r] > 0$, then:

$$\sigma T_f = \frac{T_{af} n_o}{t_w \left(\frac{w_b - w_a}{2} + \frac{d_{bp}}{2} \right)} \qquad \sigma T_r = \frac{T_{ar} n_o}{t_w \left(\frac{w_b - w_a}{2} + \frac{d_{bp}}{2} \right)}$$

If $w_b < w_a$ and $[T_f, T_r] > 0$, then:

$$\sigma T_f = \frac{T_{af} n_o}{t_w \left(\frac{d_{bp}}{2} \right)} \qquad \sigma T_r = \frac{T_{ar} n_o}{t_w \left(\frac{d_{bp}}{2} \right)}$$

If $w_r > w_a$ and $[T_f, T_r] > 0$, then:

$$\sigma T_f = \frac{T_{af} n_o}{t_w \left(\frac{w_b - w_a}{2} + \frac{d_{bp}}{2} \right) + t_r (d_b - t_w)} \qquad \sigma T_r = \frac{T_{ar} n_o}{t_w \left(\frac{w_b - w_a}{2} + \frac{d_{bp}}{2} \right) + t_r (d_b - t_w)}$$

These stresses shall be considered in combination with stresses from overturning and longitudinal moments in section G, below.

F - Longitudinal bending moments on each support (M_{zf}, M_{zr}) about the support attachment can be found by the following equations for each load case:

$$M_{zf} = F_{xf}\left(p_{cl} - Y_s\right) \qquad M_{zr} = F_{xr}\left(p_{cl} - Y_s\right)$$

The above moments assume only the support attachment to the cylinder contributes to the bending resistance. Adjustments to M_{zf} and M_{zr} may be considered when warranted by other considerations.

Longitudinal bending stress in the support at the support attachment can be evaluated by the following equations:

$$\sigma_{zrf} = M_{zf}\frac{c_{rz}}{I_z} \qquad \sigma_{zrr} = M_{zr}\frac{c_{rz}}{I_z}$$

$$\sigma_{zwf} = M_{zf}\frac{c_{wz}}{I_z} \qquad \sigma_{zwr} = M_{zr}\frac{c_{wz}}{I_z}$$

G - Maximum tensile and compressive rib and web plate stresses should be found by combining the simultaneous stresses from the methods above for the support attachment and base plate locations separately. Maximum compressive stresses can be found by the following equations for each loading case:

$$\sigma_{rfs} = \sigma_{yfs} + \sigma_{xrfs} + \sigma_{zrf} \qquad \sigma_{rrs} = \sigma_{yrs} + \sigma_{xrrs} + \sigma_{zrr}$$

$$\sigma_{wfs} = \sigma_{yfs} + \sigma_{xfs} + \sigma_{zwf} \qquad \sigma_{wrs} = \sigma_{yrs} + \sigma_{xrs} + \sigma_{zwr}$$

$$\sigma_{fb} = max\left(\sigma_{yfb} + \sigma_{xfb}, \sigma_{bf}\right) \qquad \sigma_{rb} = max\left(\sigma_{yrb} + \sigma_{xrb}, \sigma_{br}\right)$$

Maximum tensile stresses can be found by the following equations for each loading case:

$$\sigma_{rfts} = \sigma_{xrfs} + \sigma_{zrf} - \sigma_{yfs} \qquad \sigma_{rrts} = \sigma_{xrrs} + \sigma_{zrr} - \sigma_{yrs}$$

$$\sigma_{wfts} = \sigma_{xfs} + \sigma_{zwf} - \sigma_{yfs} \qquad \sigma_{wrts} = \sigma_{xrs} + \sigma_{zwr} - \sigma_{yrs}$$

$$\sigma_{ftb} = max\left(\sigma T_f, \sigma_{xfb} - \sigma_{yfb}\right) \qquad \sigma_{rtb} = max\left(\sigma T_r, \sigma_{xrb} - \sigma_{yrb}\right)$$

The absolute value of each of these should be less than $0.6*S_{ys}$. For the compressive summations, σ_{rfs}, σ_{rrs}, σ_{wfs}, σ_{wrs}, σ_{fb}, and σ_{rb}, local buckling limits shall be considered. In operating cases when a saddle pad is not used, σ_{rfs}, σ_{rrs}, σ_{wfs}, σ_{wrs}, σ_{rfts}, σ_{rrts}, σ_{wfts}, and σ_{wrts} should be less than $min[S_c, S_s]$ with local buckling not allowed to govern. Local buckling will not govern the allowable stresses for rib plate edges which extend not more than $0.375t_r\sqrt{\frac{E_s}{S_{ys}}}$ from the centerline of the attached web plate and for web plate spans between rib centerlines not more than $t_w\sqrt{\frac{E_s}{S_{ys}}}$ of this span.

H - Conservative shear stress in the cylinder and saddle pad from compressive loadings can be found by the following equations:

$$\tau_{pcf} = max\left(t_r\frac{\sqrt{\sigma_{rfs}^2 + \tau_{xf}^2}}{2(t_p + t_c)}, t_w\frac{\sqrt{\sigma_{wfs}^2 + \tau_{zf}^2}}{2(t_p + t_c)}\right) \qquad \tau_{pcr} = max\left(t_r\frac{\sqrt{\sigma_{rrs}^2 + \tau_{xr}^2}}{2(t_p + t_c)}, t_w\frac{\sqrt{\sigma_{wrs}^2 + \tau_{zr}^2}}{2(t_p + t_c)}\right)$$

τ_{pcf} and τ_{pcr} should be less than $min[0.8S_c, 0.8S_s]$.

I - Shear stress in the saddle pad from tensile loadings can be found by the following equations:

©Tubular Exchanger Manufacturers Association, Inc.

$$\tau_{pf} = max(t_r \frac{\sqrt{\sigma_{rfts}^2 + \tau_{xf}^2}}{2t_p}, t_w \frac{\sqrt{\sigma_{wfts}^2 + \tau_{zf}^2}}{2t_p}) \qquad \tau_{pr} = max(t_r \frac{\sqrt{\sigma_{rrts}^2 + \tau_{xr}^2}}{2t_p}, t_w \frac{\sqrt{\sigma_{wrts}^2 + \tau_{zr}^2}}{2t_p})$$

τ_{pf} and τ_{pr} should be less than $0.4S_{ys}$.

J - Conservative shear stress in the base plate from compressive loadings can be found by the following equations (base plate is conservatively considered to resist loading in single-shear):

$$\tau_{bf} = \frac{t_w}{t_b}\sqrt{\sigma_{fb}^2 + \tau_{zf}^2} \qquad \tau_{br} = \frac{t_w}{t_b}\sqrt{\sigma_{rb}^2 + \tau_{zr}^2}$$

τ_{bf} and τ_{br} should be less than $0.4S_{ys}$.

K - Shear stress at welds attaching ribs to saddle pad (or cylinder) (leg length l_r) can be found by the following equations (assumes welds both sides of plates):

$$\tau_{lrf} = \frac{t_r}{2l_r}\sqrt{\sigma_{rfts}^2 + \tau_{xf}^2} \qquad \tau_{lrr} = \frac{t_r}{2l_r}\sqrt{\sigma_{rrts}^2 + \tau_{xr}^2}$$

L - Shear stress at welds attaching web to saddle pad (or cylinder) (leg length l_{rw}) can be found by the following equations (assumes welds both sides of plates):

$$\tau_{lwf} = \frac{t_w}{2l_w}\sqrt{\sigma_{wfts}^2 + \tau_{zf}^2} \qquad \tau_{lwr} = \frac{t_w}{2l_w}\sqrt{\sigma_{wrts}^2 + \tau_{zr}^2}$$

τ_{lrf}, τ_{lrr}, τ_{lwf}, and τ_{lwr} should be less than $min[0.4S_{yw}, 0.212F_{exx}]$ for supports with saddle pads and $min[0.56S_c, 0.56S_s, 0.4S_{yw}, 0.212F_{exx}]$ for supports without a saddle pad in operating cases.

M - Approximate shear stress at welds attaching support to base plate (leg length l_b) can be found by the following equations (assumes welds both sides of plates):

$$\tau_{lbf} = \frac{\sigma_{ftb} t_w}{2l_b} \qquad \tau_{lbr} = \frac{\sigma_{rtb} t_w}{2l_b}$$

τ_{lbf} and τ_{lbr} should be less than $min[0.4S_{yw}, 0.212F_{exx}]$.

N - Approximate shear stress at welds attaching ribs to webs (leg length l_r) can be found by the following equations (assumes welds both sides of ribs):

$$\tau_{lrwf} = \frac{F_{xf} Q_{wz}}{2l_{rw} n_r I_z} \qquad \tau_{lrwr} = \frac{F_{xr} Q_{wz}}{2l_{rw} n_r I_z}$$

τ_{lrwf}, and τ_{lrwr} should be less than $min[0.4S_{yw}, 0.212F_{exx}]$.

O - The minimum saddle pad to cylinder seal-welds (leg length l_p) should be the lesser of t_c and minimum t_p when t_p is governed by τ_{pf} or τ_{pr}. If t_p is increased for reasons unrelated to τ_{pf} or τ_{pr}, the weld size need only be equal to t_p which yields passing τ_{pf} and τ_{pr}.

P - The anchor tensile stress shall be combined with any simultaneous shear stresses from F_{xf}, F_{xr} and/or F_{zf}, F_{zr}. In a load case including overstrength factors such as for seismic, a separate equivalent case may be needed without overstrength considered for stress evaluation used to size anchor studs/bolts.

 ©Tubular Exchanger Manufacturers Association, Inc.

RGP-G-7.1.1.2.3 FOUNDATION STRESS REDUCTION

If compressive stresses σ_{cf}, σ_{cr} exceed the allowable foundation loadings, this method should be used to ensure the base plate is of sufficient strength to distribute the loadings. With sufficient base plate strength, maximum stress along the depth (d_{bp}) of the base plate may be considered located at the web and consistently taper to zero stress at the edges of the base plate furthest from the web. The maximum compressive foundation stress using this alternate model is found by the following equations:

$$\sigma_{cfalt} = \frac{2f_{cf}}{d_{bp}} \qquad \sigma_{cralt} = \frac{2f_{cr}}{d_{bp}}$$

A basic means to find the base plate stresses from foundation stress distribution in supports with at least one rib is determined by the following equations:

If web located to one side of d_{bp} then:

$$\sigma_{cbf} = \frac{2f_{cf}}{t_b^2}\max(\frac{w_{bp}-w_b}{2}, d_{bp}) \qquad \sigma_{cbr} = \frac{2f_{cr}}{t_b^2}\max(\frac{w_{bp}-w_b}{2}, d_{bp})$$

If web located at center of d_{bp} then:

$$\sigma_{cbf} = \frac{f_{cf}}{t_b^2}\max(\frac{w_{bp}-w_b}{2}, d_{bp}) \qquad \sigma_{cbr} = \frac{f_{cr}}{t_b^2}\max(\frac{w_{bp}-w_b}{2}, d_{bp})$$

σ_{cbf}, σ_{cbr} should be less than $0.75S_{ys}$.

Alternatively, the base plate may be evaluated by a method such as given by Roark and Young where the maximum compressive stress from this section (σ_{cfalt}, σ_{cralt}) is used and distributed as discussed above. Note: a base plate straddling a rib or web may be considered fixed along that line while a base plate terminating at a rib or web should be considered simply-supported along that line.

 ©Tubular Exchanger Manufacturers Association, Inc.

RGP-G-7.1.1.3 L.P. ZICK MODIFICATION FOR HEAT EXCHANGERS

The standard analysis for horizontal vessels on saddle supports, (L.P. Zick) does not account for non-symmetric geometry, overturning or longitudinal loads acting on exchanger cylinder without modification. The equations below account for these loads and geometry, giving modified values for Q and M appropriate for heat exchangers for use in the ASME Section VIII, Division 2, Part 4.15.3 implementation of the Zick analysis. Other implementations of the Zick method are permitted, but the nomenclature used below matches that of ASME. Note that each end of the exchanger shall be calculated separately.

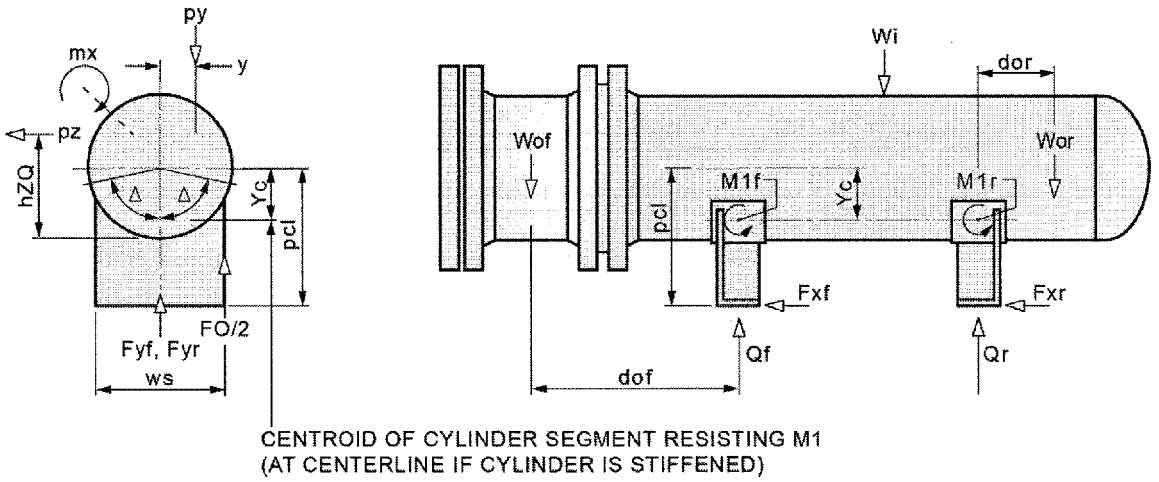

Bearing angle of the support for use in Zick analysis (radians): θ_c

This value may be found by: $2arcsin\left(\frac{w_s}{D_o}\right)$ with a maximum of π

Half of the angle spanning effective cylinder resisting M_1: Δ

For unstiffened shells: $\Delta = \frac{5\theta c}{12} + \frac{\pi}{6}$

Distance from centerline to centroid of Zick effective cylinder: Y_c

For unstiffened shells: $Y_c = sin(\Delta)\frac{D_o - t_c}{2\Delta}$

For stiffened shells: $Y_c = 0$

Effective vertical force acting on each support: Q_f, Q_r

Bending moment acting on shell at each support: M_{1f}, M_{1r}

Vertical (weight) forces overhanging each support: W_{of}, W_{or}

Vertical (weight) forces intermediate to the supports: W_i

Effective vertical force overhanging each support: F_{of}, F_{or}

Overhang distance from (F_{of}, F_{or}) to adjacent support: d_{of}, d_{or}

Nomenclature not listed here is from RGP-G-7.1.1.1 and RGP-G-7.1.1.2.

The end distance (a) should be measured from the support to the inner face of highly rigid features of the exchanger such as a tubesheet, large flange ring, or head tangent for each end of the exchanger. Likewise, the length (L) used in these evaluations should be based on L_s+2a for each end of the exchanger. The definitions of Q, T, M_1 and M_2 of ASME Section VIII, Division 2 part 4.15.3.2 are replaced with those below.

To use ASME Section VIII, Division 2 parts 4.15.3.5 and 4.15.3.6 with considerations for overturning loads, F_{yf} and F_{yr} must be determined to include moment effects to yield appropriate Q_f/Q_r inputs. Shear loadings from p_z are transmitted to the support primarily by the material at the lowest tangent of the shell and so this becomes the point which the moment is summed about (distance h_{ZQ} is measured from p_z to lowest tangent). Anchored, matching supports are assumed to resist the overturning moments as discussed in RGP-G-7.1.1.2.2.D (overturning moment / [m_{ff}, m_{fr}]). In the 4.15.3.5 evaluation, the shell segment (x_1,x_2 long) and any reinforcement above the top of the support (horn) act as two curved beams (spanning a distance w_s apart) which resist all vertical loadings transmitted to the support in the depressurized state. The effective total additional vertical loading imposed by overturning moments is therefore twice the actual compression effect on the side of the shell from moment (overturning moment on each support times $\frac{2}{w_s}$). In the case of boxed-in supports, the rib and web section at the horizontal centerline of the lower exchanger may be considered as a stiffening ring in plane of the support for this evaluation. The effective vertical force from overturning (F_{Of}, F_{Or}) acting to bend the shell and reinforcement at the top (horn) of the support is found by the following equation:

$$F_{Of} = \frac{2\left(\sum p_z h_{ZQ} \pm \sum p_y d_y \pm \sum m_x\right)}{m_{ff} w_s} \qquad F_{Or} = \frac{2\left(\sum p_z h_{ZQ} \pm \sum p_y d_y \pm \sum m_x\right)}{m_{fr} w_s}$$

The modified Q_f and Q_r used in 4.15.3.5 and 4.15.3.6 are found by the following equations:

$$Q_f = F_{yf} + F_{Of} \qquad Q_r = F_{yr} + F_{Or}$$

To use ASME Section VIII, Division 2 part 4.15.3.4 with considerations for overturning loads, effective shear (T) adjacent to each side of each support needs to be similarly modified. The modified Q_f and Q_r calculated above are also to be used. The effective overhanging force on the exchanger segment outward from each support is found by the following equations where (F_{Of}, F_{Or}) equations above are modified to include only those loads outwardly overhanging the front and rear supports respectively:

$$F_{of} = \sum W_{of} + F_{Of} \qquad F_{or} = \sum W_{or} + F_{Or}$$

The maximum shear load adjacent to each support used in 4.15.3.4 is found by the following equations:

$$T_f = max\left(Q_f - F_{of}, F_{of}\right) \qquad T_r = max\left(Q_r - F_{or}, F_{or}\right)$$

To use ASME Section VIII, Division 2 part 4.15.3.3 with considerations of longitudinal loads, the moment ($M1$) must include the total longitudinal bending moments acting about the centroid of the arc Δ*2. The modified $M1f$ and $M1r$ used in part 4.15.3.3 for longitudinal bending stress on the shell at the support can be found by the following equations:

$$M_{1f} = \pm F_{xf}\left(p_{cl} - Y_c\right) \pm \sum W_{of} d_{of} \pm \sum m_z \qquad M_{1r} = \pm F_{xr}\left(p_{cl} - Y_c\right) \pm \sum W_{or} d_{or} \pm \sum m_z$$

Note F_{xf}, F_{xr} and $\sum m_z$ only include the loads exerted on features outside the axial location of the support in question. The modified M_2 used in part 4.15.3.3 for longitudinal bending stress between the supports can be found by the following equation:

$$M_2 = \pm 0.5 M_{1f} \pm 0.5 M_{1r} \pm \frac{W_i L_s}{12} \pm F_x\left(p_{cl} - Y_c\right) \pm \sum m_z$$

Note, F_x and this $\sum m_z$ only include loads exerted on features between the supports.

 ©Tubular Exchanger Manufacturers Association, Inc.

When units are stacked, lower exchangers in a stack must include all superimposed loadings of the upper units in the evaluation of Q_f, Q_r. If supports align in a stack of horizontal exchangers, $\sum W_{of} d_{of}$, $\sum W_{or} d_{or}$, and $\sum m_Z$ will include only loads from the exchanger in question. If stacked units utilize supports misaligned axially with one another, the appropriate modifications to T_f, T_r, M_{1f}, M_{1r}, and M_2 should be performed.

All stress evaluations should proceed in accordance with ASME Section VIII, Division 2 part 4.15.3 once the above modified input variables have been defined. Case specific allowable stress determinations should proceed according to part 4.15.3 using the allowable stresses from the applicable equipment design code.

 ©Tubular Exchanger Manufacturers Association, Inc.

RGP-G-7.1.2 VERTICAL VESSEL SUPPORTS

The vessel lugs described in this paragraph incorporate top plate, base plate, and two gussets. Other configurations and methods of calculations are acceptable.

APPLIED LOADS

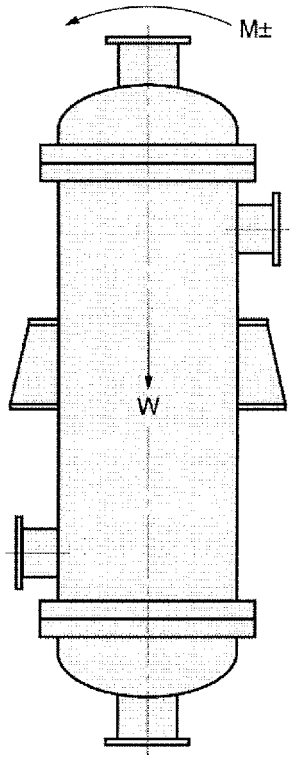

W = TOTAL DEAD WT. PER CONDITION ANALYZING (EMPTY, OPERATION, FULL OF WATER, ETC...) lb (kN)
N = NUMBER OF LUG SUPPORTS
dB = BOLT CIRCLE, in. (mm)
M = OVERTURNING MOMENT AT THE SUPPORTS DUE TO EXTERNAL LOADING, in-lb (mm-kN)

$$\text{MAX TENSION (UPLIFT)} = \frac{4M}{dBN} - \frac{W}{N}, \text{ lb (kN)}$$

$$\text{IF } W > \frac{4M}{dBN} \text{ NO UPLIFT EXISTS}$$

$$\text{MAX COMPRESSION} = \frac{4M}{dBN} + \frac{W}{N}, \text{ lb (kN)}$$

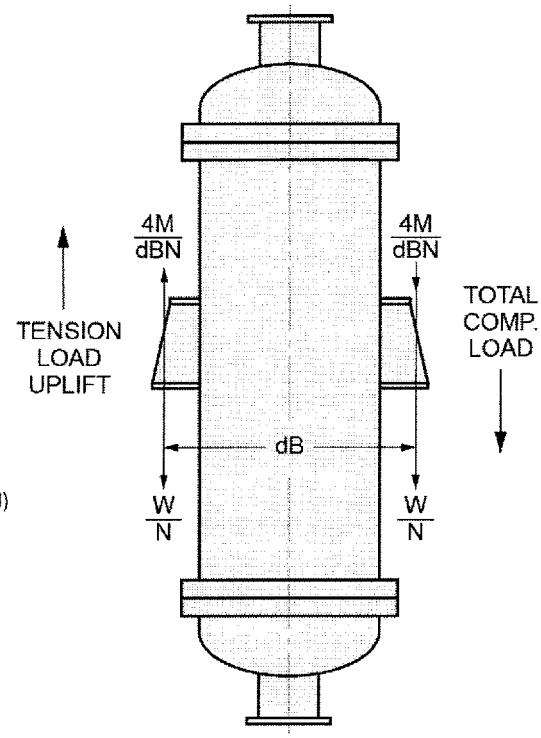

RGP-G-7.1.2.1 DESIGN OF VESSEL SUPPORT LUG

SUPPORT WITH TWO GUSSETS

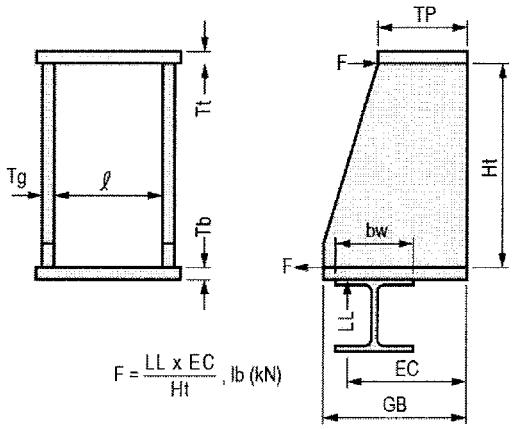

$$F = \frac{LL \times EC}{Ht}, \text{ lb (kN)}$$

LL = LOAD PER LUG (TENSION OR COMPRESSION), lb (kN)
EC = LOCATION OF LOAD REACTION, in (mm)
Ht = DISTANCE BETWEEN TOP PLATE AND BOTTOM PLATE, in. (mm)
Tb = THICKNESS OF BOTTOM PLATE, in. (mm)
Tt = THICKNESS OF TOP PLATE, in. (mm)
Tg = THICKNESS OF GUSSETS, in. (mm)
TP = TOP PLATE WIDTH, in. (mm)
GB = BOTTOM PLATE WIDTH, in. (mm)
bw = BEARING WIDTH ON BASE PLATE (USE 75% OF GB IF UNKNOWN), in. (mm)

RGP-G-7.1.2.2 BASE PLATE

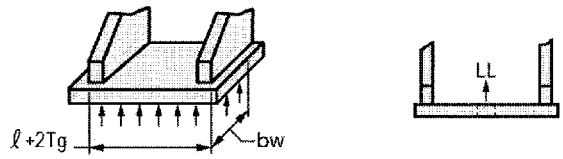

Consider base plate as simply supported beam subject to a uniformly distributed load ω, lb/in, (kN/mm)

$$M_B = \frac{\omega\left(\ell + T_g\right)^2}{8}, \text{ in-lb (mm-kN)}$$

where

$$\omega = \frac{LL}{\ell + 2T_g}, \frac{\text{lb}}{\text{in}}\left(\frac{\text{kN}}{\text{mm}}\right)$$

For tension due to uplift, consider base plate as simply supported beam with a concentrated load LL, lb (kN) at its center.

$$M_T = \frac{LL\left(\ell + T_g\right)}{4}, \text{ in-lb (mm-kN)}$$

BENDING STRESS

$$Sb = \frac{6M^*}{(bw)(Tb)^2}, \frac{\text{lb}}{\text{in}^2}$$

Sb < 90% YIELD STRESS

M^* = GREATER OF M_B OR M_T

BENDING STRESS (METRIC)

$$Sb = \frac{6M^*}{(bw)(Tb)^2} x10^6, \text{ kPa}$$

RGP-G-7.1.2.3 TOP PLATE

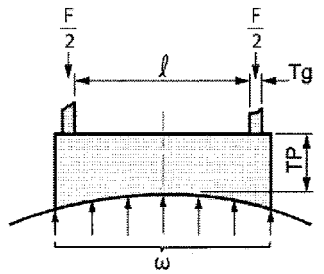

Assume simply supported beam with uniform load

$$M = \frac{\omega\left(\ell + T_g\right)^2}{8}, \text{ in-lb (mm-kN)}$$

where

$$\omega = \frac{F}{\ell + 2T_g}, \frac{\text{lb}}{\text{in}}\left(\frac{\text{kN}}{\text{mm}}\right)$$

BENDING STRESS

$$Sb = \frac{6M}{(TP)^2\ (\mathrm{Tt})}, \frac{\mathrm{lb}}{\mathrm{in}^2}$$

Sb < 90% YIELD STRESS

BENDING STRESS (METRIC)

$$Sb = \frac{6M}{(TP)^2(Tt)} x10^6, \text{ kPa}$$

RGP-G-7.1.2.4 GUSSETS

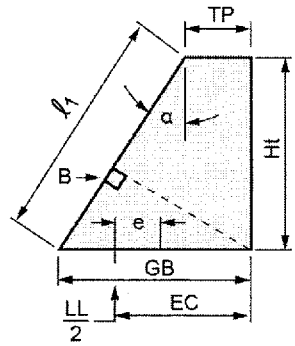

$$\alpha = \text{ARCTAN } \frac{GB - TP}{H_t}, \text{ degrees}$$

$$e = \text{eccentricity} = EC - \frac{GB}{2}, \text{ in. (mm)}$$

MAX. COMPRESSIVE STRESS AT B

$$Sc = \frac{LL/2}{GBTg(\cos\alpha)^2}\left(1 + \frac{6e}{GB}\right), \frac{\mathrm{lb}}{\mathrm{in}^2}$$

Sc < THE ALLOWABLE STRESS IN COMPRESSION (COLUMN BUCKLING PER AISC)

MAX. COMPRESSIVE STRESS AT B (METRIC)

$$Sc = \frac{LL/2}{GBTg(\cos\alpha)^2}\left(1 + \frac{6e}{GB}\right) \times 10^6, \text{ kPa}$$

RGP-G-7.2 LIFTING LUGS (SOME ACCEPTABLE TYPES OF LIFTING LUGS)

RGP-G-7.2.1 VERTICAL UNITS

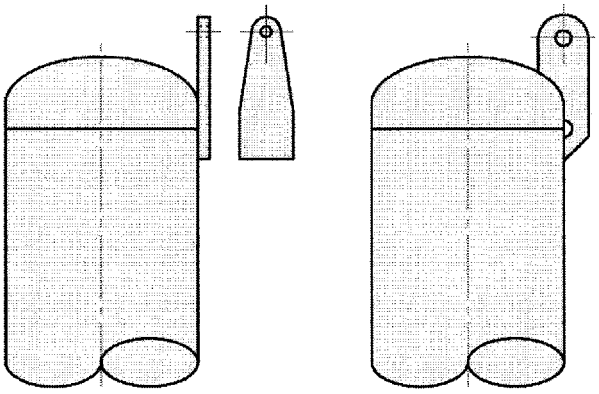

RABBIT-EAR LUG

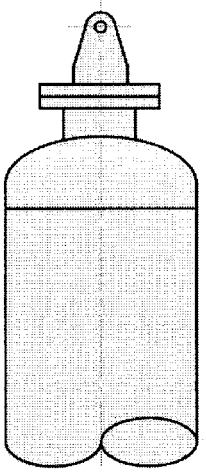

COVER LUG

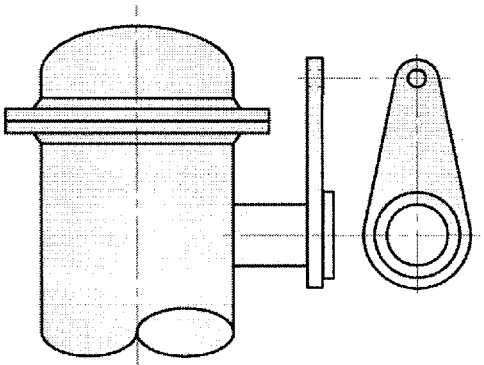

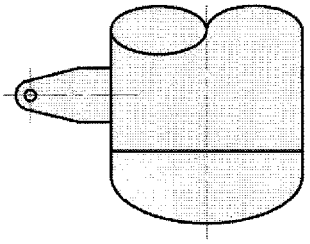

TAILING LUG

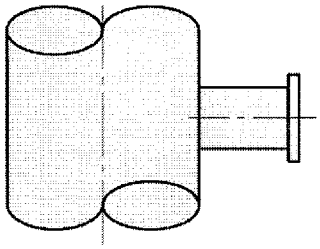

TRUNNION

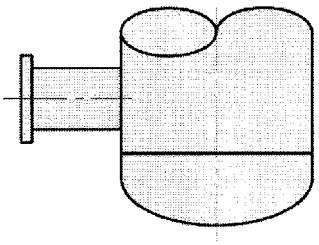

TAILING TRUNNION

TRUNNIONS SHOULD BE CHECKED FOR BENDING AND SHEAR.
VESSEL REINFORCEMENT SHOULD BE PROVIDED AS REQUIRED.

©Tubular Exchanger Manufacturers Association, Inc.

RGP-G-7.2.2 HORIZONTAL UNITS

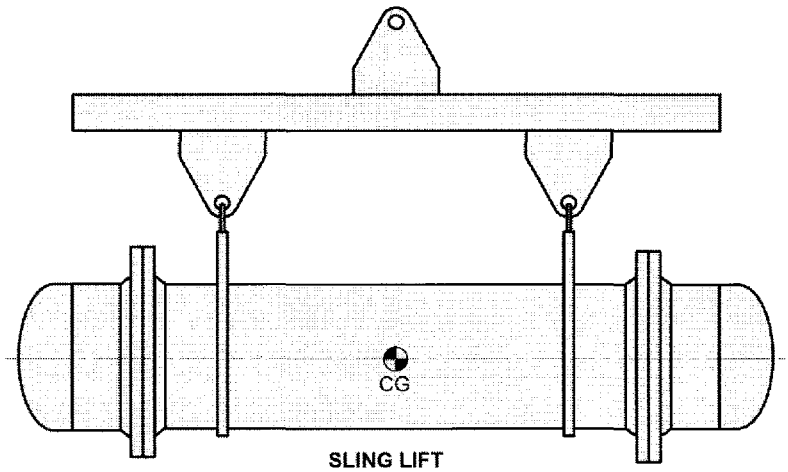

SLING LIFT
PREFERRED METHOD OF LIFTING IS SLINGING

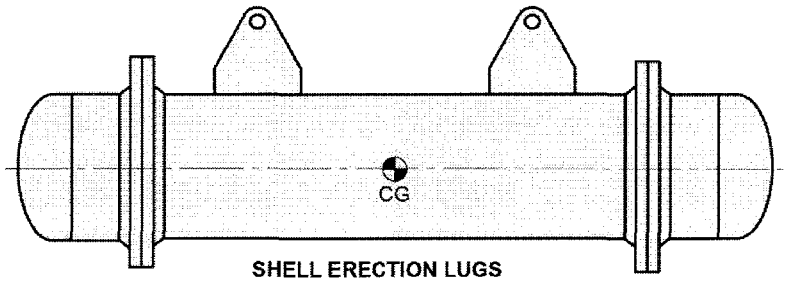

SHELL ERECTION LUGS
ONLY IF SPECIFIED BY CUSTOMER

RGP-G-7.2.3 TYPICAL COMPONENT LIFTING DEVICES

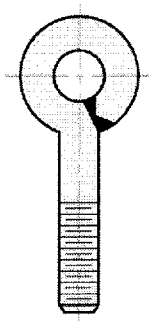

EYEBOLT

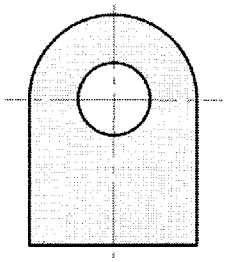

LIFTING LUG

 ©Tubular Exchanger Manufacturers Association, Inc.

RGP-G-7.2.4 LIFT PROCEDURE

1. Establish lift procedure
   Lift procedure is established by customer.
   This step may not be necessary for routine lifts.

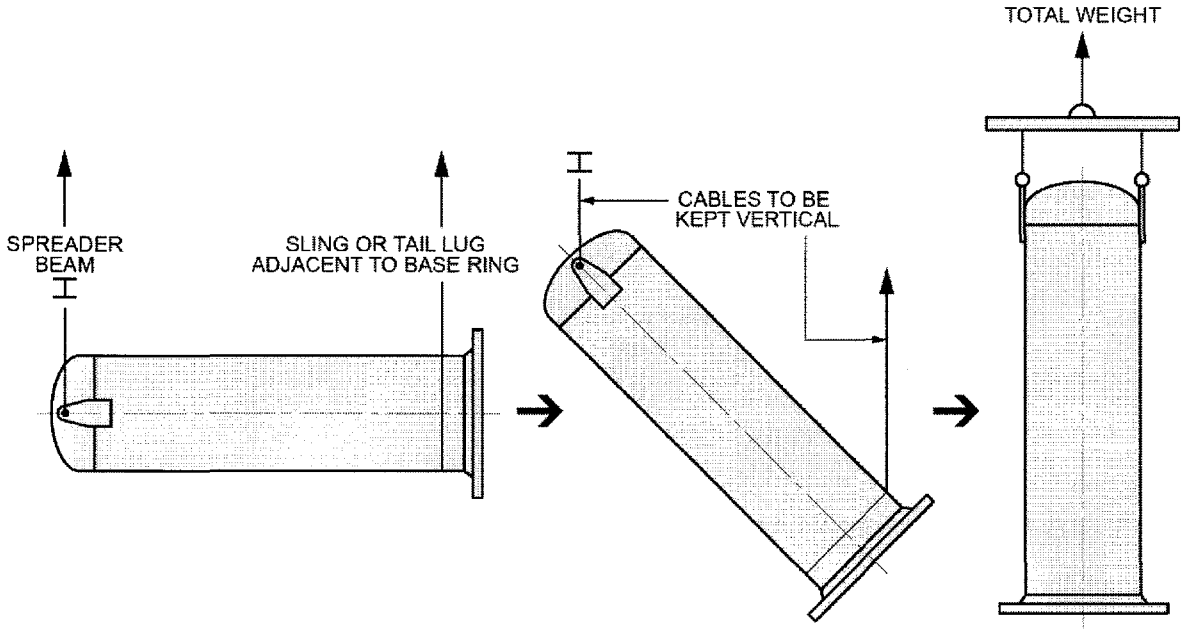

2. Calculate weight to be lifted.

3. Apply impact factor
   1.5 minimum, unless otherwise specified.

4. Select shackle size

5. Determine loads that apply (see above figures).

 ©Tubular Exchanger Manufacturers Association, Inc.

6. Size lifting lug.
   Thickness of lifting lug is calculated by using the greater of shear or bending results as follows:

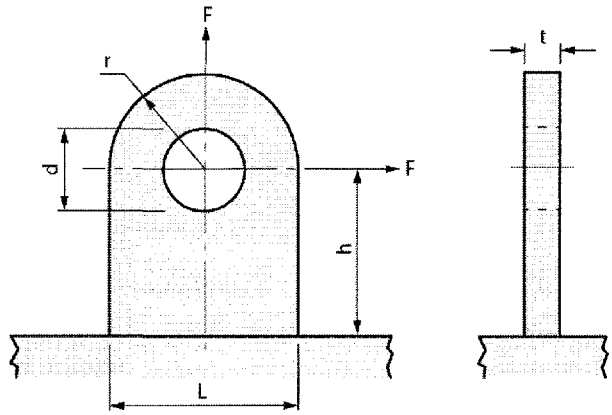

t = REQUIRED THICKNESS OF LUG, in. (mm)
Sb = ALLOWABLE BENDING STRESS OF LUG, psi (kPa)
S = ALLOWABLE SHEAR STRESS OF LUG, psi (kPa)
L = WIDTH OF LUG, in. (mm)
h = DISTANCE, CENTERLINE OF HOLE TO COMPONENT, in. (mm)
F = DESIGN LOAD / LUG INCLUDING IMPACT FACTOR, lb. (kN)
r = RADIUS OF LUG, in. (mm)
d = DIAMETER OF HOLE, in. (mm)

REQUIRED THICKNESS FOR SHEAR

$$t = \frac{F}{2(S)(r - d/2)}, \text{ in.}$$

REQUIRED THICKNESS FOR SHEAR (METRIC)

$$t = \frac{F}{2(S)(r - d/2)} \times 10^6, \text{ mm}$$

REQUIRED THICKNESS FOR BENDING

$$t = \frac{6Fh}{Sb(L)^2}, \text{ in.}$$

REQUIRED THICKNESS FOR BENDING (METRIC)

$$t = \frac{6Fh}{Sb(L)^2} \times 10^6, \text{ mm}$$

Use greater of thickness required for bending or shear.

Note: component should be checked and/or reinforced for locally imposed stresses.

 ©Tubular Exchanger Manufacturers Association, Inc.

RGP-G-7.3 WIND AND SEISMIC DESIGN

For purposes of design, wind and seismic forces are assumed to be negligible unless the purchaser specifically details such forces in the inquiry. When such requirements are specified by the purchaser, the designer should consider their effects on the various components of the heat exchanger. These forces should be evaluated in the design of the heat exchanger for the pressure containing components, the heat exchanger supports and the device used to attach the heat exchanger supports to the anchor points. See RGP-G-7.1.1 for a recommended method for horizontal units and RGP-G-7.1.2 for a recommended method for vertical units. Other methods of evaluation of wind and seismic loads and other methods of heat exchanger support are permitted. The designer can also refer to the selected references listed below.

References:

(1) ASME Boiler and Pressure Vessel Code, Section III, "Nuclear Power Plant Components."

(2) "Earthquake Engineering", R. L. Weigel, Prentice Hall, Inc., 1970.

(3) "Fundamentals of Earthquake Engineering", Newark and Rosenbluth, Prentice Hall, Inc., 1971.

(4) Steel Construction Manual of the American Institute of Steel Construction, Inc., 15th Edition.

(5) TID-7024 (1963), "Nuclear Reactors and Earthquakes", U.S. Atomic Energy Commission Division of Technical Information.

(6) "Earthquake Engineering for Nuclear Reactor Facilities (JAB-101)", Blume, Sharp and Kost, John A. Blume and Associates, Engineers, San Francisco, California, 1971.

(7) "Process Equipment Design", Brownell and Young, Wiley and Sons, Inc., 1959.

(8) "Minimum Design Loads and Associated Criteria for Buildings and Other Structures", ASCE/SEI 7-16, American Society of Civil Engineers, 2016.

(9) "ICC International Building Code", International Code Council, 2018

RGP-RCB-2 PLUGGING TUBES IN TUBE BUNDLES

In U-tube heat exchangers, and other exchangers of special design, it may not be possible or feasible to remove and replace defective tubes. Under certain conditions as indicated below, the manufacturer may plug either a maximum of 1% of the tubes or 2 tubes without prior agreement.

Condition:

(1) For U-tube heat exchangers where the leaking tube(s) is more than 2 tubes away from the periphery of the bundle.

(2) For heat exchangers with limited access or manway openings in a welded-on channel where the tube is located such that it would be impossible to remove the tube through the access opening in the channel.

(3) For other heat exchanger designs which do not facilitate the tube removal in a reasonable manner.

(4) The method of tube plugging will be a matter of agreement between manufacturer and purchaser.

(5) The manufacturer maintains the original guarantees.

(6) "As-built" drawings indicating the location of the plugged tube(s) shall be furnished to the purchaser.

RGP-RCB-4 ENTRANCE AND EXIT AREAS

RGP-RCB-4.6.1 DISTRIBUTOR BELT

A distributor belt is an annular space on the outer diameter of the shell which provides impingement protection, reduced bundle ρV2, reduced shell side pressure drop, improved flow distribution at the inlet and/or outlet nozzle and can reduce flow induced tube vibration issues. Also by putting the annular space external to the shell, the full shell diameter may be utilized for the tube field. Distributor belts can be designed to incorporate flexible shell elements (RCB-8 FSE) and as such, serve dual design roles.

Mechanical design of the distributor belt will be dependent on the shell being continuous or non-continuous within the distributor belt and whether the bundle is removable or fixed type. The Code will dictate the particular requirements and a guideline can be found in TEMA RCB-8 Flexible Shell Elements (non-continuous shell). Consideration shall be given to hydrostatic end loads; consult the Code. Since the distributor belt is a high point and low point in a horizontal shell, vent and drain connections should be provided.

 ©Tubular Exchanger Manufacturers Association, Inc.

Hydraulic design of the distributor belt will be dependent on the flow rate and density of the process entering or exiting the distributor belt. Multiple slots are preferred for improved distribution/pressure drop, to reduce baffle snag on insertion / removal of the bundle and to preserve more shell strength in the area of the belt. Baffle cuts and baffle locations should be considered when locating the vapor belt and slots. See Figure RGP-RCP-4.6.1 for one example of a distributor belt configuration. Many other designs and configurations are possible.

Belt and Slot Sizing:

Nozzle Inside Diameter = d_n

Nozzle Outside Diameter = D_n

Shell Outside Diameter = D_s

(1) Belt Inside Diameter = $d_b \geq$ maximum of [$D_s+0.6d_n$ or D_s+4" (100mm)]

(2) Belt length = $L_b \geq$ maximum of [$\frac{3}{8}\pi\frac{d_n^2}{d_b - D_s}$ and D_n+5" (125mm)]

(3) Minimum Slot Area should be $1.75\pi(d_n^2)$ where possible.

(4) Slot Length should be within the end baffle space of the bundle.

(5) Slots locations should be located away from nearest baffle cuts and nozzle where possible and consider any mechanical constraints.

FIGURE RGP-RCP-4.6.1: EXAMPLE DISTRIBUTOR BELT CONFIGURATION

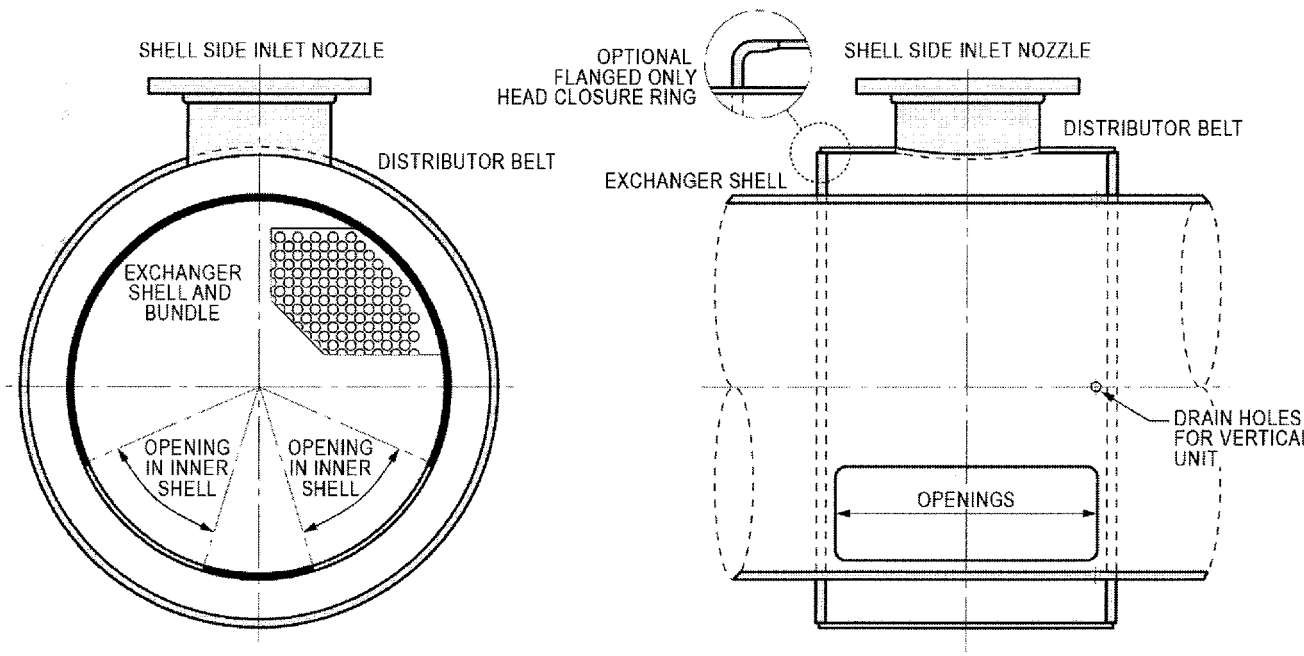

Reference:

(1) HTRI Report STG-17 Annular Distributors: A Parametric Design Study, Kevin J. Farell P.E., October 2005

RGP-RCB-4.6.2 SHELL OR BUNDLE ENTRANCE AND EXIT AREAS

This paragraph provides methods for determining approximate shell and bundle entrance areas for common configurations as illustrated by Figures RGP-RCB-4.6.2.1.1, 4.6.2.1.2, 4.6.2.2.1, 4.6.2.2.2, 4.6.2.3.1 and 4.6.2.4.1.

Results are somewhat approximate due to the following considerations:

(1) Non-uniform location of tubes at the periphery of the bundle.

(2) The presence of untubed lanes through the bundle.

(3) The presence of tie rods, spacers, and/or bypass seal devices.

Full account for such concerns based on actual details will result in improved accuracy.

Special consideration must be given to other configurations. Some are listed below:

(1) Nozzle located near the bends of U-tube bundles.

(2) Nozzle which is attached in a semi or full tangential position to the shell.

(3) Perforated distribution devices.

(4) Impingement plates which are not flat or which are positioned with significant clearance off the bundle.

(5) Annular distributor belts.

RGP-RCB-4.6.2.1 AND 4.6.2.2 SHELL ENTRANCE OR EXIT AREA

The minimum shell entrance or exit area for Figures RGP-RCB-4.6.2.1.1, 4.6.2.1.2, 4.6.2.2.1 and 4.6.2.2.2 may be approximated as follows:

$$A_s = \pi D_n h + F_1\left(\frac{\pi}{4}D_n^2\right)\frac{(P_t - D_t)}{F_2 P_t}$$

where

A_s = Approximate shell entrance or exit area, in^2 (mm^2).

D_n = Nozzle inside diameter, in. (mm)

h = Average free height above tube bundle or impingement plate, in. (mm)

$h = 0.5\ (h_1 + h_2)$ for Figures RGP-RCB-4.6.2.1.1, 4.6.2.1.2, and 4.6.2.2.2.

$h = 0.5\ (D_s - OTL)$ for Figure RGP-RCB-4.6.2.2.1.

h_1 = Maximum free height (at nozzle centerline), in. (mm)

h_2 = Minimum free height (at nozzle edge), in. (mm)

$h_2 = h_1 - 0.5[D_s - (D_s^2 - D_n^2)^{0.5}]$

D_s = Shell inside diameter, in. (mm)

OTL = Outer tube limit diameter, in. (mm)

F_1 = Factor indicating presence of impingement plate

F_1 = 0 with impingement plate

F_1 = 1 without impingement plate

 ©Tubular Exchanger Manufacturers Association, Inc.

P_t = Tube center to center pitch, in. (mm)

D_t = Tube outside diameter, in. (mm)

F_2 = Factor indicating tube pitch type and orientation with respect to fluid flow direction

$F_2 = 1.0$ *for* *and*

$F_2 = 0.866$ *for*

$F_2 = 0.707$ *for*

RGP-RCB-4.6.2.3 AND 4.6.2.4 BUNDLE ENTRANCE OR EXIT AREA

The minimum bundle entrance or exit area for Figures RGP-RCB-4.6.2.3.1 and 4.6.2.4.1 may be approximated as follows:

$$A_b = B_s(D_s - OTL) + (B_s K - A_p)\frac{P_t - D_t}{F_2 P_t} + A_l$$

where

A_b = Approximate bundle entrance or exit area, in^2 (mm^2).

B_s = Baffle spacing at entrance or exit, in. (mm)

K = Effective chord distance across bundle, in. (mm)

$K = Dn$ for Figure RGP-RCB-4.6.2.4.1

A_p = Area of impingement plate, in^2 (mm^2)

$A_p = 0$ for no impingement plate

$A_p = \dfrac{\pi I_p^{\,2}}{4}$ for round impingement plate

$A_p = I_p^2$ for square impingement plate

I_p = Impingement plate diameter or edge length, in. (mm)

A_l = Unrestricted longitudinal flow area, in^2 (mm^2)

 ©Tubular Exchanger Manufacturers Association, Inc.

The formulae below assume unrestricted longitudinal flow.

A_l = 0 for baffle cut normal to nozzle axis

$A_l = 0.5\ a\ b$ for Figure RGP-RCB-4.6.2.3.1 with baffle cut parallel with nozzle axis

$A_l = 0.5(D_s - OTL)c$ for Figure RGP-RCB-4.6.2.4.1 with baffle cut parallel with nozzle axis

a = Dimension from Figure RGP-RCB-4.6.2.3.1, in. (mm)

b = Dimension from Figure RGP-RCB-4.6.2.3.1, in. (mm)

c = Dimension from Figure RGP-RCB-4.6.2.4.1, in. (mm)

RGP-RCB-4.6.2.5 ROD TYPE IMPINGEMENT PROTECTION AREAS

Rod type impingement protection shall utilize a minimum of two rows of rods arranged such that maximum bundle entrance area is provided without permitting direct impingement on any tube.

Shell entrance area may be approximated per Paragraph RGP-RCB-4.6.2.2, Figure RGP-RCB-4.6.2.2.1, or Figure RGP-RCB-4.6.2.2.2.

Bundle entrance area may be approximated per Paragraph RGP-RCB-4.6.2.4, Figure RGP-RCB-4.6.2.3.1, or Figure RGP-RCB-4.6.2.4.1.

 ©Tubular Exchanger Manufacturers Association, Inc.

FIGURES RGP-RCB-4.6.2.1.1, 4.6.2.1.2, 4.6.2.2.1 AND 4.6.2.2.2

SHELL ENTRANCE OR EXIT AREA

FIGURE RGP-RCB-4.6.2.1.1
IMPINGEMENT PLATE – FULL LAYOUT

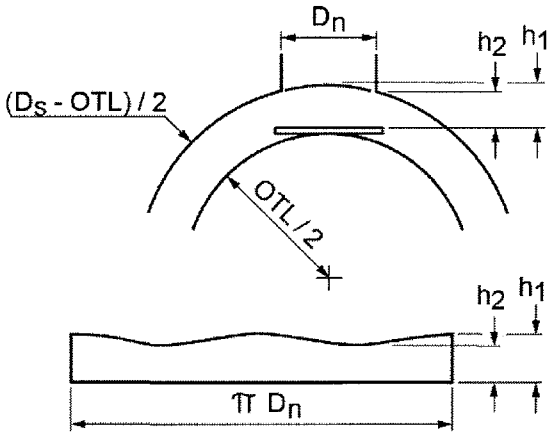

FIGURE RGP-RCB-4.6.2.1.2
IMPINGEMENT PLATE – PARTIAL LAYOUT

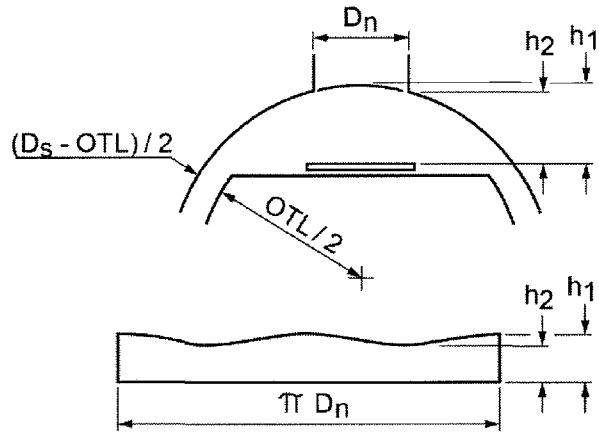

FIGURE RGP-RCB-4.6.2.2.1
NO IMPINGEMENT PLATE – FULL LAYOUT

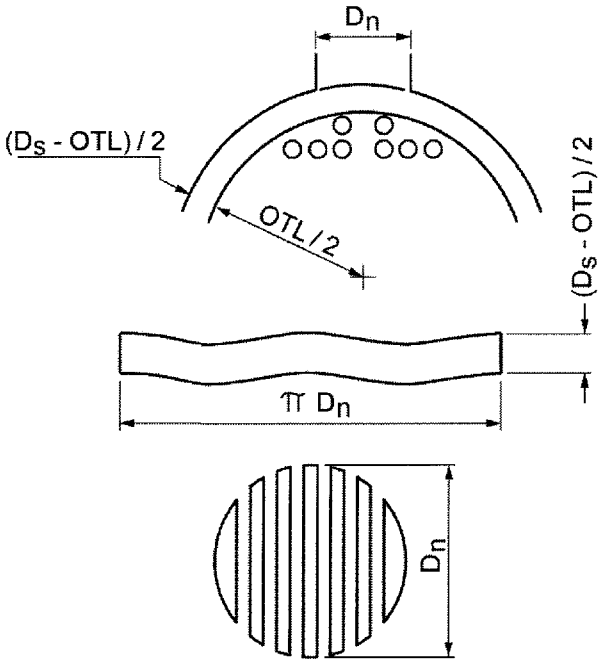

FIGURE RGP-RCB-4.6.2.2.2
NO IMPINGEMENT PLATE – PARTIAL LAYOUT

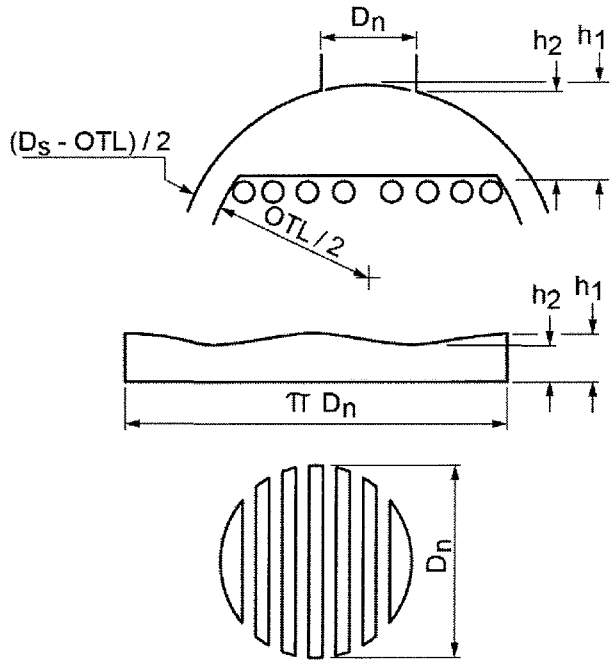

©Tubular Exchanger Manufacturers Association, Inc.

FIGURES RGP-RCB-4.6.2.3.1 AND 4.6.2.4.1

BUNDLE ENTRANCE OR EXIT AREA

FIGURE RGP-RCB-4.6.2.3.1
PARTIAL LAYOUT – WITH OR WITHOUT IMPINGEMENT PLATE –

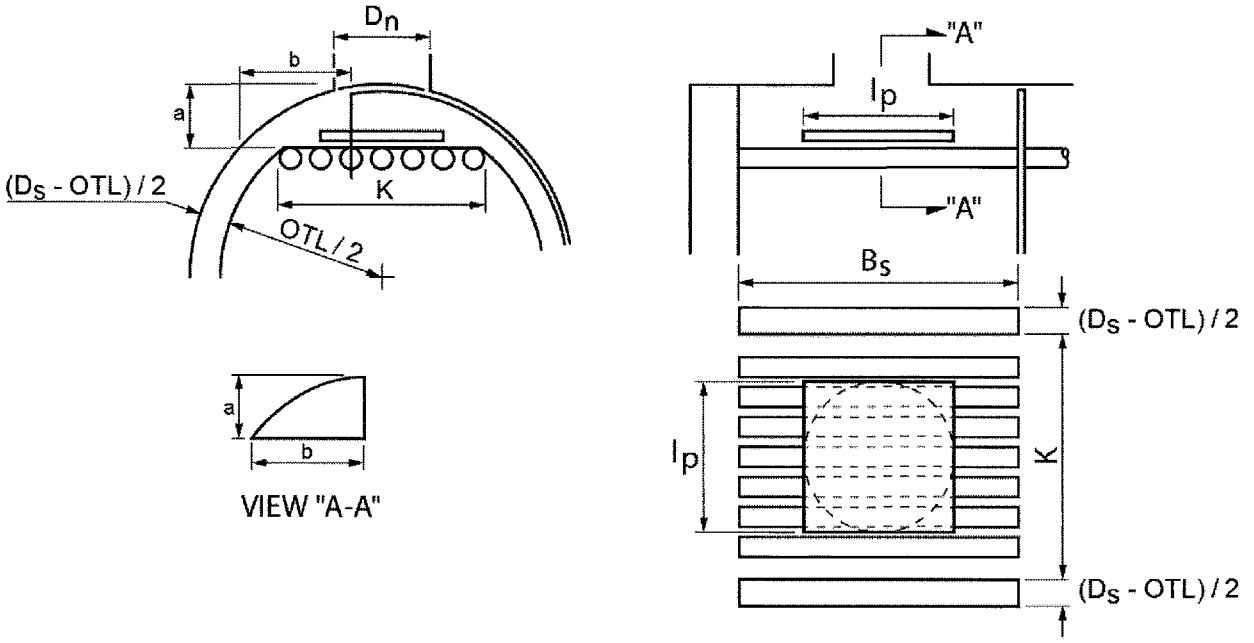

FIGURE RGP-RCB-4.6.2.4.1
FULL LAYOUT – NO IMPINGEMENT PLATE –

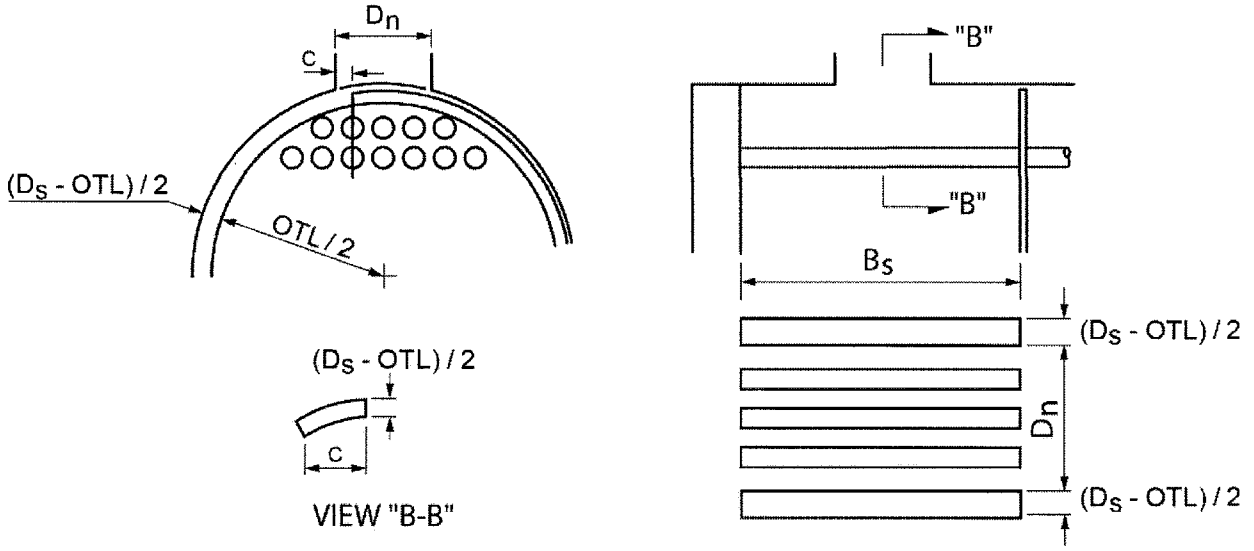

 ©Tubular Exchanger Manufacturers Association, Inc.

RGP-RCB-7 TUBESHEETS

RGP-RCB-7.2 TUBE HOLES IN TUBESHEETS

RGP-RCB-7.2.3 TUBE HOLE FINISH

Tube hole finish affects the mechanical strength and leak tightness of an expanded tube-to-tubesheet joint. In general:

(1) A rough tube hole provides more mechanical strength than a smooth tube hole. This is influenced by a complex relationship of modulus of elasticity, yield strength and hardness of the materials being used.

(2) A smooth tube hole does not provide the mechanical strength that a rough tube hole does, but it can provide a pressure tight joint at a lower level of wall reduction.

(3) Very light wall tubes require a smoother tube hole finish than heavier wall tubes.

(4) Significant longitudinal scratches can provide leak paths through an expanded tube-to-tubesheet joint and should therefore be removed.

RGP-RCB-7.3 TUBE WALL REDUCTION

The optimum tube wall reduction for an expanded tube-to-tubesheet joint depends on a number of factors. Some of these are:

(1) Tube hole finish

(2) Presence or absence of tube hole serrations (grooves)

(3) Tube hole size and tolerance

(4) Tubesheet ligament width and its relation to tube diameter and thickness

(5) Tube wall thickness

(6) Tube hardness and change in hardness during cold working

(7) Tube O.D. tolerance

(8) Type of expander used

(9) Type of torque control or final tube thickness control

(10) Function of tube joint, e.g. strength in resistance to pulling out, minimum cold work for corrosion purposes, freedom from leaks, ease of replacement, etc.

(11) Length of expanded joint

(12) Compatibility of tube and tubesheet materials

RGP-RCB-7.4 TESTING OF WELDED TUBE JOINTS

Tube-to-tubesheet welds are to be tested using the manufacturer's standard method.
Weld defects are to be repaired and tested.
Any special testing will be performed by agreement between manufacturer and purchaser.

 ©Tubular Exchanger Manufacturers Association, Inc.

RGP-RCB-10.6 NOZZLE LOADINGS

For purposes of design, nozzle loads are assumed to be negligible, unless the purchaser specifically details such loads in his inquiry as indicated in Figure RGP-RCB-10.6.

FIGURE RGP-RCB-10.6

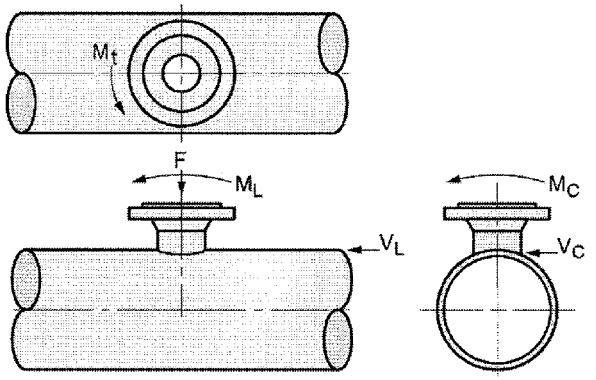

Since piping loads can impose forces and moments in three geometric planes, there is no one set of values which can be provided as a maximum by the manufacturer. Each piping load should be evaluated as a combination of forces and moments as specified by the purchaser.

Nozzle reactions from piping are transmitted to the pressure containment wall of the heat exchanger, and could result in an over-stressed condition in this area. For calculation of the combined stresses developed in the wall of the vessel due to piping and pressure loads, references are listed below.

References:

(1) Welding Research Council Bulletin No. 537, "Precision Equations and Enhanced Diagrams for Local Stresses in Spherical and Cylindrical Shells Due to External Loadings for Implementation of WRC Bulletin 107" and errata, K. R. Wickman, A.G. Hopper and J.L. Mershon.

(2) "Stresses From Radial Loads and External Moments in Cylindrical Pressure Vessels", P.P. Bijlaard, The Welding Journal Research Supplement (1954-1955).

(3) "Local Stresses in Cylindrical Shells", Fred Forman, Pressure Vessel Handbook Publishing, Inc.

(4) Pressure Vessel and Piping Design Collected Papers, (1927-1959), The American Society of Mechanical Engineers, "Bending Moments and Leakage at Flanged Joints", Robert G. Blick.

(5) ASME Boiler and Pressure Vessel Code, Section III, "Nuclear Power Plant Components".

(6) Welding Research Council Bulletin No. 198, "Secondary Stress Indices for Integral Structural Attachments to Straight Pipe", W.G. Dodge.

(7) Welding Research Council Bulletin No. 297, "Local Stresses in Cylindrical Shells Due To External Loadings on Nozzles - Supplement to WRC Bulletin 107", J.L. Mershon, K.Mokhtarian, G.V. Ranjan and E.C. Rodabaugh.

RGP-RCB-11.5 FLANGE DESIGN

When designing flanges, numerous considerations as described in Appendix S of the ASME Code, Appendix O of ASME PCC-1, or WRC Bulletin 538 should be reviewed. These methods are useful to determine the initial bolt stress required in order to achieve a leak-free bolted joint. Once the required bolt stress is known, flange rotation and stress can then be calculated and, if necessary, the designer can take further action to reduce rotation and/or stresses.

These methods are especially pertinent to large diameter, low pressure flanges, as these usually have a large actual bolt area compared to the minimum required area. This extra bolt area combined with the potential bolt stress can overload the flange such that excessive deflection, rotation, and permanent set are produced.

 ©Tubular Exchanger Manufacturers Association, Inc.

RGP-RCB-12 FINITE ELEMENT ANALYSIS GUIDELINES

This section offers guidelines for applying the Finite Element Analysis technique to components used in shell-and-tube type heat exchangers. These guidelines may be used as a basis for determining geometry for various heat exchanger components, as well as element types to be used with that corresponding geometry. This section also suggests guidelines for properly evaluating an analysis and determining the type of stress that should be considered for the corresponding geometry.

Because of the variety of FEA methods available today, TEMA offers this section as a general guideline for users and is not to be substituted for good engineering practice.

Careful consideration must be given to interpretation of FEA results. Typical calculation codes provide output in various modes. The choice of element types such as solid or shell will influence the interpretation process. The user's requirements for code, whether ASME, PED, or other, must be integrated into the interpretation of stress results. Each code specifies the basis for interpretation of analysis results. Therefore, the calculated results must be combined and expressed in accordance with the Code. Typical combination methods are Von Mises and Maximum Shear Stress.

1.0 Stress combinations. When interpreting output of calculations, the type of stress, whether membrane or bending or a combination of both, must be determined. Also, the nature of the stress whether primary or secondary, general or local is to be determined. Heat exchangers employ a wide range of construction features that may result in various areas of the heat exchanger being interpreted differently. Therefore, each area of the exchanger must be evaluated separately. The Code will contain definition of the basis of design to be used in applying labels to various stress results in the heat exchanger.

2.0 Stress limits. Once the stress category is determined, the corresponding stress limit from the Code may be compared to the calculated results. All stresses must be equal to or less than the applicable limits for each category. Vessels being designed to more than one code may have different areas limited by different codes. The most restrictive result is to govern the design for each area of the exchanger.

3.0 Mesh limits. Suitable mesh development is one of the key steps to obtaining useable results. Element aspect ratios ought to be held to a maximum of 3:1. In areas of expected flexure a limit of 1.5:1 may be more prudent. This allows stiffness of the mesh to follow real response more closely.

4.0 Element Types. Consideration must be given to choosing element types appropriate to the structure being analyzed. Shell elements will be useable over much of the typical heat exchanger. When areas of discontinuity are being analyzed solid elements are likely to be of benefit. Examples may be nozzle/shell juncture, support/shell juncture, and support analysis. However, mesh development again needs to be considered. Flexural stiffness through the thickness of thin constructions may require several layers of elements in order that the bending stresses are suitably addressed. A minimum of 5 layers is suggested when using solid elements in areas of discontinuity.

5.0 Element Order. Suitable element order (e.g. linear or quadratic, etc.) must be chosen after consideration of the shape of the components and the type of stress/strain field expected. Element order should not vary quickly within short distances, for example a region of primarily linear elements followed by a narrow zone of quadratic, then back to a narrow zone of linear, and then another zone of quadratic. This may lead to a sensitized solution matrix wherein computational accuracy is compromised.

6.0 Element Sizes. Element size ought to gradually vary as-needed within the mesh. Avoid having large elements bounded by numerous small elements. Create a transition region from the large elements to the small elements.

 ©Tubular Exchanger Manufacturers Association, Inc.

RGP-T-2 FOULING

RGP-T-2.1 TYPES OF FOULING

Currently five different types of fouling mechanisms are recognized. They are individually complex; often occurring simultaneously, and their effects may increase pressure drop, accelerate corrosion and decrease the overall heat transfer coefficient.

(1) Precipitation Fouling

Crystallization is one of the most common types of precipitation fouling. It occurs in many process streams, cooling water and chemical streams. Crystallization scale forms as the result of over-saturation of a relatively insoluble salt. The most common, calcium carbonate, forms on heat transfer surfaces as a result of the thermal decomposition of the bicarbonate ion and the subsequent reaction with calcium ions.

(2) Particulate Fouling

Sedimentation is the most common form of particulate fouling. Particles of clay, sand, silt, rust, etc. are initially suspended in the fluid and form deposits on the heat transfer surfaces. Sedimentation is frequently superimposed on crystallization and possibly acts as a catalyst for certain types of chemical reaction fouling.

(3) Chemical Reaction Fouling

Surface temperatures and the presence of oxidation promoters are known to significantly influence the rate of build up of this fouling type. Coking, the hard crust deposit of hydrocarbons formed on high temperature surfaces, is a common form of this type of fouling.

(4) Corrosion Fouling

Iron oxide, the most common form of corrosion product, is the result of an electro-chemical reaction and forms as a scale on iron-containing, exposed surfaces of the heat exchanger. This scale produces an added thermal resistance to the base metal of the heat transfer surface.

(5) Biological Fouling

Organic material growth develops on heat transfer surfaces in contact with untreated water such as sea, river, or lake water. In most cases, it will be combined or superimposed on other types of fouling such as crystallization and sedimentation. Biological growth such as algae, fungi, slime, and corrosive bacteria represent a potentially detrimental form of fouling. Often these micro-organisms provide a sticky holding medium for other types of fouling which would otherwise not adhere to clean surfaces.

RGP-T-2.2 EFFECT OF FOULING

There are different approaches to provide an allowance for anticipated fouling in the design of shell and tube heat exchangers. The net result is to provide added heat transfer surface area. This generally means that the exchanger is oversized for clean operation and barely adequate for conditions just before it should be cleaned. Although many heat exchangers operate for years without cleaning, it is more common that they must be cleaned periodically. Values of the fouling resistances to be specified are intended to reflect the values at the point in time just before the exchanger is to be cleaned. The major uncertainty is the assignment of realistic values of the fouling resistances. Further, these thermal resistances only address part of the impact of fouling as there is an increase in the hydraulic resistance as well; however, this is most often ignored. Fouling is complex, dynamic, and in time, degrades the performance of a heat exchanger.

The use of thermal resistance permits the assignment of the majority of the fouling to the side where fouling predominates. It also permits examination of the relative thermal resistance introduced by the different terms in the overall heat transfer coefficient equation. These can signal, to the designer, where there are potential design changes to reduce the effect of fouling. It also permits the determination of the amount of heat transfer surface area that has been assigned for fouling. Higher fouling resistances are sometimes inappropriately specified to provide safety factors to account for uncertainties in the heat transfer calculation, the actual operating conditions, and/or possible plant expansion. These uncertainties may well exist and should be reflected in the design, but they should not be masked in the fouling resistances. They should be clearly identified as appropriate factors in the design calculations.

Another inappropriate approach to heat exchanger design is to arbitrarily increase the heat transfer surface area to allow for fouling. This over-surfacing avoids the use of the appropriate fouling

 ©Tubular Exchanger Manufacturers Association, Inc.

resistances. In effect, the fouling for the exchanger is combined and no longer can be identified as belonging to one side or the other.

In order to examine the effect of fouling on the pressure drop, it is necessary for the purchaser to supply the anticipated thicknesses of each of the fouling layers.

RGP-T-2.3.1 PHYSICAL CONSIDERATIONS

A) Properties Of Fluids And Usual Propensity For Fouling

The most important consideration is the fluid and the conditions when it produces fouling. At times, a process modification can result in conditions that are less likely to cause fouling.

B) Surface And Bulk Temperatures

For many kinds of fouling, as the temperatures increase, the amount of fouling increases. Lower temperatures produce slower fouling build-up and deposits that often are easier to remove.

C) Local Velocities

Normally, keeping the velocities high reduces the tendency to foul. Velocities on the tube side are limited by erosion, and on the shell side by flow-induced vibration. Stagnant and recirculation regions on the shell side lead to heavy fouling.

D) Tube Material, Configuration and Surface Finish

The selection of tube material is significant when it comes to corrosion. Some kinds of biological fouling can be lessened by copper-bearing tube materials. There can be differences between finned and plain tubing. Surface finish has been shown to influence the rate of fouling and the ease of cleaning.

E) Heat Exchanger Geometry and Orientation

The geometry of a particular heat exchanger can influence the uniformity of the flows on the tube side and the shell side. The ease of cleaning can be greatly influenced by the orientation of the heat exchanger.

F) Heat Transfer Process

The fouling resistances for the same fluid can be considerably different depending upon whether heat is being transferred through sensible heating or cooling, boiling, or condensing.

G) Fluid Purity and Freedom from Contamination

Most fluids are prone to have inherent impurities that can deposit out as a fouling layer, or act as catalysts to the fouling processes. It is often economically attractive to eliminate the fouling constituents by filters.

H) Fluid Treatment to Prevent Corrosion And Biological Growth

Fluid treatment is commonly carried out to prevent corrosion and/or biological growth. If these treatments are neglected, rapid fouling can occur.

I) Fluid Treatment to Reduce Fouling

There are additives that can disperse the fouling material so it does not deposit. Additives may also alter the structure of the fouling layers that deposit so that they are easily removed. The use of these treatments is a product quality and economic decision.

J) Cathodic Protection

One of the effective ways to reduce the possibility of corrosion and corrosion fouling is to provide cathodic protection in the design.

K) Planned Cleaning Method and Desired Frequency

It is important that the cleaning method be planned at the design stage of the heat exchanger. Considerations in design involving cleaning are whether it will be done on-line, off-line, bundle removed or in place, whether it will involve corrosive fluids, etc.. Access, clearances, valving, and piping also must be considered to permit ease of cleaning. The cleaning method may require special safety requirements, which should be incorporated in the design.

L) Place the More Fouling Fluid on The Tube Side

There are two benefits from placing the more fouling fluid on the tube side. There is less danger of low velocity or stagnant flow regions on the tube side, and, it is generally

 ©Tubular Exchanger Manufacturers Association, Inc.

easier to clean the tube side than the shell side. It is often possible to clean the tube side with the exchanger in place while it may be necessary to remove the bundle to clean the shell side.

RGP-T-2.3.2 ECONOMIC CONSIDERATIONS

Planned fouling prevention, maintenance and cleaning make possible lower allowances for fouling, but do involve a commitment to ongoing costs. The amount and frequency of cleaning varies considerably with user and operation.

The most significant parameters involved in deciding upon the amount of fouling allowance that should be provided are the operational and economic factors that change with time. New fluid treatments, changing first costs and operating costs, different cleaning procedures and the degree of payback for longer periods of being on stream should be some of the items evaluated in determining an appropriate fouling resistance. Failure to include the economic considerations may lead to unnecessary monetary penalties for fouling.

Companies concerned about fouling continually monitor the performance of their heat exchangers to establish fouling experience and develop their own guidelines for determining the appropriate fouling resistance to specify when purchasing new equipment.

Almost every source of cooling water needs to be treated before it is used for heat exchanger service. The treatment ranges from simple biocide addition to control biological fouling, to substantial treatment of brackish water to render it suitable for use. The amount of treatment may be uneconomical and substitute sources of cooling must be sought. With today's technology, the quality of water can be improved to the point that fouling should be under control as long as flow velocities are maintained and surface temperatures controlled.

RGP-T-2.4 DESIGN FOULING RESISTANCES (HR FT^2 °F/BTU)

The purchaser should attempt to select an optimal fouling resistance that will result in a minimum sum of fixed, shutdown and cleaning costs. The following tabulated values of fouling resistances allow for oversizing the heat exchanger so that it will meet performance requirements with reasonable intervals between shutdowns and cleaning. These values do not recognize the time related behavior of fouling with regard to specific design and operational characteristics of particular heat exchangers.

 ©Tubular Exchanger Manufacturers Association, Inc.

Fouling Resistances for Industrial Fluids

Oils:	
Fuel Oil #2	0.002
Fuel Oil #6	0.005
Transformer Oil	0.001
Engine Lube Oil	0.001
Quench Oil	0.004
Gases And Vapors:	
Manufactured Gas	0.010
Engine Exhaust Gas	0.010
Steam (Non-Oil Bearing)	0.0005
Exhaust Steam (Oil Bearing)	0.0015-0.002
Refrigerant Vapors (Oil Bearing)	0.002
Compressed Air	0.001
Ammonia Vapor	0.001
CO_2 Vapor	0.001
Chlorine Vapor	0.002
Coal Flue Gas	0.010
Natural Gas Flue Gas	0.005
Liquids:	
Molten Heat Transfer Salts	0.0005
Refrigerant Liquids	0.001
Hydraulic Fluid	0.001
Industrial Organic Heat Transfer Media	0.002
Ammonia Liquid	0.001
Ammonia Liquid (Oil Bearing)	0.003
Calcium Chloride Solutions	0.003
Sodium Chloride Solutions	0.003
CO_2 Liquid	0.001
Chlorine Liquid	0.002
Methanol Solutions	0.002
Ethanol Solutions	0.002
Ethylene Glycol Solutions	0.002

 ©Tubular Exchanger Manufacturers Association, Inc.

Fouling Resistances For Chemical Processing Streams

Gases And Vapors:	
Acid Gases	0.002-0.003
Solvent Vapors	0.001
Stable Overhead Products	0.001
Liquids:	
MEA And DEA Solutions	0.002
DEG And TEG Solutions	0.002
Stable Side Draw And Bottom Product	0.001-0.002
Caustic Solutions	0.002
Vegetable Oils	0.003

Fouling Resistances For Natural Gas-Gasoline Processing Streams

Gases And Vapors:	
Natural Gas	0.001-0.002
Overhead Products	0.001-0.002
Liquids:	
Lean Oil	0.002
Rich Oil	0.001-0.002
Natural Gasoline And Liquified Petroleum Gases	0.001-0.002

 ©Tubular Exchanger Manufacturers Association, Inc.

Fouling Resistances for Oil Refinery Streams

Crude and Vacuum Unit Gases And Vapors:						
Atmospheric Tower Overhead Vapors						0.001
Light Naphthas						0.001
Vacuum Overhead Vapors						0.002
Crude and Vacuum Liquids:						
Crude Oil						
	0 to 250 ° F VELOCITY FT/SEC			250 to 350 °F VELOCITY FT/SEC		
	<2	2-4	>4	<2	2-4	>4
DRY	0.003	0.002	0.002	0.003	0.002	0.002
SALT*	0.003	0.002	0.002	0.005	0.004	0.004
	350 to 450 ° F VELOCITY FT/SEC			450 ° F and over VELOCITY FT/SEC		
	<2	2-4	>4	<2	2-4	>4
DRY	0.004	0.003	0.003	0.005	0.004	0.004
SALT*	0.006	0.005	0.005	0.007	0.006	0.006
*Assumes desalting @ approx. 250 ° F						
Gasoline						0.002
Naphtha And Light Distillates						0.002-0.003
Kerosene						0.002-0.003
Light Gas Oil						0.002-0.003
Heavy Gas Oil						0.003-0.005
Heavy Fuel Oils						0.005-0.007
Asphalt and Residuum:						
Vacuum Tower Bottoms						0.010
Atmosphere Tower Bottoms						0.007
Cracking and Coking Unit Streams:						
Overhead Vapors						0.002
Light Cycle Oil						0.002-0.003
Heavy Cycle Oil						0.003-0.004
Light Coker Gas Oil						0.003-0.004
Heavy Coker Gas Oil						0.004-0.005
Bottoms Slurry Oil (4.5 Ft/Sec Minimum)						0.003
Light Liquid Products						0.002

 ©Tubular Exchanger Manufacturers Association, Inc.

Fouling Resistances for Oil Refinery Streams (continued)

Catalytic Reforming, Hydrocracking and Hydrodesulfurization Streams:	
Reformer Charge	0.0015
Reformer Effluent	0.0015
Hydrocracker Charge and Effluent*	0.002
Recycle Gas	0.001
Hydrodesulfurization Charge and Effluent*	0.002
Overhead Vapors	0.001
Liquid Product Over 50 ° A.P.I.	0.001
Liquid Product 30 - 50 ° A.P.I.	0.002
*Depending on charge, characteristics and storage history, charge resistance may be many times this value.	
Light Ends Processing Streams:	
Overhead Vapors and Gases	0.001
Liquid Products	0.001
Absorption Oils	0.002-0.003
Alkylation Trace Acid Streams	0.002
Reboiler Streams	0.002-0.003
Lube Oil Processing Streams:	
Feed Stock	0.002
Solvent Feed Mix	0.002
Solvent	0.001
Extract*	0.003
Raffinate	0.001
Asphalt	0.005
Wax Slurries*	0.003
Refined Lube Oil	0.001
*Precautions must be taken to prevent wax deposition on cold tube walls.	
Visbreaker:	
Overhead Vapor	0.003
Visbreaker Bottoms	0.010
Naphtha Hydrotreater:	
Feed	0.003
Effluent	0.002
Naphthas	0.002
Overhead Vapors	0.0015

 ©Tubular Exchanger Manufacturers Association, Inc.

Fouling Resistances for Oil Refinery Streams (continued)

Catalytic Hydro Desulfurizer:	
Charge	0.004-0.005
Effluent	0.002
H.T. Sep. Overhead	0.002
Stripper Charge	0.003
Liquid Products	0.002
HF Alky Unit:	
Alkylate, Deprop. Bottoms, Main Fract. Overhead Main Fract. Feed	0.003
All Other Process Streams	0.002

Fouling Resistances for Water

Temperature of Heating Medium	Up To 240 ° F		240 to 400 ° F	
Temperature of Water	125 ° F		Over 125 ° F	
	Water Velocity Ft/Sec		Water Velocity Ft/Sec	
	3 and Less	Over 3	3 and Less	Over 3
Sea Water	0.0005	0.0005	0.001	0.001
Brackish Water	0.002	0.001	0.003	0.002
Cooling Tower and Artificial Spray Pond:				
Treated Make Up	0.001	0.001	0.002	0.002
Untreated	0.003	0.003	0.005	0.004
City or Well Water	0.001	0.001	0.002	0.002
River Water:				
Minimum	0.002	0.001	0.003	0.002
Average	0.003	0.002	0.004	0.003
Muddy or Silty	0.003	0.002	0.004	0.003
Hard (Over 15 Grains/Gal.)	0.003	0.003	0.005	0.005
Engine Jacket	0.001	0.001	0.001	0.001
Distilled or Closed Cycle				
Condensate	0.0005	0.0005	0.0005	0.0005
Treated Boiler Feedwater	0.001	0.0005	0.001	0.001
Boiler Blowdown	0.002	0.002	0.002	0.002

If the heating medium temperature is over 400 ° F and the cooling medium is known to scale, these ratings should be modified accordingly.

 ©Tubular Exchanger Manufacturers Association, Inc.

RGP-T-2.5 FOULING MITIGATION DESIGN METHOD

Experience has shown that fouling may be mitigated for many services through proper heat exchanger design and operation. For the experienced designer, fouling resistances are not used when operating data for identical or similar services is available. In these cases, designing with the proper attention to velocity (or shear stress) and wall temperature can prevent significant fouling whereas the mere use of a high fouling factor will generally engender a high degree of fouling.

A small design margin may be added to the design to address design uncertainties. Rarely is this margin in excess of 30%. More than 30% excess margin calls for a root cause analysis of the problem followed by a fouling (or design) mitigation strategy. Except for rare cases of intentional high variability in throughput, more than 30% excess margin in a heat exchanger design indicates the presence of unresolved engineering issues and can often be a significant source of hidden cost to the owner.

It is good practice to design for an allowable pressure drop derived by reducing the maximum available pressure drop in the clean condition by the amount of excess margin anticipated. This permits any excess margin to be applied in such a way that design shear rates and wall temperatures are not reduced. The maximum available pressure drop in the clean condition is estimated as the maximum available pressure drop divided by the fractional pressure drop increase when the exchanger is operated in the fouled condition.

Some fluids are known to not foul during operation. For these fluids, the only reason to apply design margin, outside of throughput variability, is to address correlational uncertainty. This is normally on the order of 20% or less.

Examples of Fluids Which Typically Do Not Foul
Refrigerants
Demineralized Water
Liquified Natural Gas (LNG)
Non-Polymerizing (diolefin-free) Condensing Gases
Any Streams Which Do Not Foul Within the Operating Range of the Heat Exchanger

Cooling Water: For the case of those cooling water streams which are closely regulated in the plant for velocity control and are kept reasonably clean with a water maintenance program, fouling mitigation strategies apply. The cooling water temperatures should be designed and operated to not exceed a maximum bulk temperature of 120°F (49°C) nor exceed a maximum wall temperature of 140°F (60°C).

In addition, there must be sufficient velocity to maintain any particulate in suspension as it travels through the heat exchanger as well as to produce enough wall shear to stabilize any fouling which does occur. There are many sources for information on minimum cooling water velocities for design. An old rule of thumb for tube side minimum water velocities has been 3 ft/sec (1 m/s).

In reality, the exact minimum value for any cooling water system is so dependent upon the contaminants dissolved in the water that one single equation for this purpose can only be regarded as an approximation. In the final analysis, the judgment as to minimum design water velocities while adhering to prudent water temperature limitations must be made by those knowledgeable about the water used. That must be the owner.

 ©Tubular Exchanger Manufacturers Association, Inc.

NON-MANDATORY APPENDIX A – TUBESHEETS

The following rules have been included as a design method for tubesheets for heat exchangers that are not designed per ASME Code. It is not intended that these rules be used in addition to ASME design rules.

A.1 TUBESHEET THICKNESS

A.1.1 APPLICATION INSTRUCTIONS AND LIMITATIONS

The formulas and design criteria contained in Paragraphs A.1 through A.2.5 are applicable, with limitations noted, when the following normal design conditions are met:

(1) Size and pressure are within the scope of the TEMA Mechanical Standards, Paragraph RCB-1.1

(2) Tube-to-tubesheet joints are expanded, welded or otherwise constructed such as to effectively contribute to the support of the tubesheets (except U-tube tubesheets)

(3) Tubes are uniformly distributed (no large untubed areas)

Abnormal conditions of support or loading are considered Special Cases, and are defined in Paragraph A.3 which is referenced, when pertinent, in subsequent paragraphs.

A.1.2 EFFECTIVE TUBESHEET THICKNESS

Except as qualified by Paragraphs A.1.2.1 and A.1.2.2, the effective tubesheet thickness shall be the thickness measured at the bottom of the tube side pass partition groove and/or shell side longitudinal baffle groove minus corrosion allowance in excess of the groove depths.

A.1.2.1 APPLIED TUBESHEET FACINGS

The thickness of applied facing material shall not be included in the minimum or effective tubesheet thickness.

A.1.2.2 INTEGRALLY CLAD TUBESHEETS

The thickness of cladding material in integrally clad plates and cladding deposited by welding may be included in the effective tubesheet thickness as allowed by the Code.

A.1.3 REQUIRED EFFECTIVE TUBESHEET THICKNESS

The required effective tubesheet thickness for any type of heat exchanger shall be determined from the following paragraphs, for both tube side and shell side conditions, corroded or uncorroded, using whichever thickness is greatest. Both tubesheets of fixed tubesheet exchangers shall have the same thickness, unless the provisions of Paragraph A.1.5.6 are satisfied.

 ©Tubular Exchanger Manufacturers Association, Inc.

A.1.3.1 TUBESHEET FORMULA – BENDING

$$T = \frac{FG}{3}\sqrt{\frac{P}{\eta S}}$$

where

T = Effective tubesheet thickness, in. (mm)

S = Code allowable stress in tension, psi (kPa), for tubesheet material at design metal temperatures (see Paragraph RCB-1.4.2)

P =

For outside packed floating head exchangers (Type P), P shall be as defined in Paragraph A.1.4.1, psi (kPa).

For packed floating end exchangers with lantern ring (Type W), for the floating tubesheet, P shall be as defined in Paragraph A.1.4.2, psi (kPa).

For fixed tubesheet exchangers, P shall be as defined in Paragraph A.1.5.3, A.1.5.4, or A.1.5.5, psi (kPa).

For other type exchangers, P shall be the design pressure, shell side or tube side, corrected for vacuum when present on the opposite side, or differential pressure when specified by the purchaser, psi (kPa).

For U-tube tubesheets (Type U) and for stationary tubesheets where the opposite tubesheet is a floating tubesheet, where the tubesheet is extended as a flange for bolting to heads or shells with ring type gaskets, P psi (kPa) is given by the following:

For a tubesheet not welded to the channel or shell and extended as a flange for bolting to the shell, P is the greatest absolute value of (P_s + P_B) or (P_t+ P_B)

For a tubesheet welded to the channel and extended as a flange for bolting to the shell, P is the greatest absolute value of (P_s + P_B) or P_t

For a tubesheet welded to the shell and extended as a flange for bolting to the channel, P is the greatest absolute value of (P_t + P_B) or P_s

Where P_s or P_t is the design pressure of the shell side or tube side, corrected for vacuum when present on the opposite side, $P_B = (6.2\ M) / (F^2\ G^3)$ and M is larger of M_1 or M_2 as defined in A.1.5.2.

For floating tubesheets (Type T), where the tubesheet is extended for bolting to heads with ring type gaskets, the effect of the moment acting on the extension is defined in Paragraph A.1.5.2 in terms of equivalent tube side and shell side bolting pressures except G shall be the gasket G of the floating tubesheet. P psi (kPa) is given by the greatest absolute value of the following:

$P = P_t + P_{Bt}$
or $P = P_s - P_{Bs}$
or $P = P_t$
or $P = P_s$

η =

$$1 - \frac{0.785}{\left(\frac{\text{Pitch}}{\text{Tube OD}}\right)^2}$$ for square or rotated square tube patterns

$$1 - \frac{0.907}{\left(\frac{\text{Pitch}}{\text{Tube OD}}\right)^2}$$ for triangular or rotated triangular tube patterns

For integrally finned tubes, the OD of the tube in the tubesheet shall be used.

©Tubular Exchanger Manufacturers Association, Inc.

G =

G shall be either in the corroded or uncorroded condition, dependent upon which condition is under consideration.

For fixed tubesheet exchangers, G shall be the shell inside diameter.

For kettle type exchangers, G shall be the port inside diameter.

For any floating tubesheet (except divided), G shall be the G used for the stationary tubesheet using the P as defined for other type exchangers.

Type T tubesheets shall also be checked using the pressure P defined above with bolting and using the actual gasket G of the floating tubesheet.

For a divided floating tubesheet, G shall be 1.41(d) where d is the length of the shortest span measured over centerlines of gaskets.

For other type exchangers, G shall be the diameter, in. (mm), over which the pressure under consideration is acting. (e.g. Pressure acting on the gasketed side of a tubesheet, G= the diameter at the location of the gasket load reaction as defined in the Code. Pressure acting on an integral side of a tubesheet, G= the inside diameter of the integral pressure part.)

F =

For unsupported tubesheets, (e.g. U-tube tubesheets) gasketed both sides, F= 1.25

For supported tubesheets, (e.g. fixed tubesheets and floating type tubesheets) gasketed both sides, F= 1.0.

For unsupported tubesheets, (e.g. U-tube tubesheets) integral with either or both sides, F shall be the value determined by the curve U in Figure A.1.3.1.

For supported tubesheets, (e.g. fixed tubesheets and floating type tubesheets) integral with either or both sides, F shall be the value determined by the curve H in Figure A.1.3.1.

FIGURE A.1.3.1

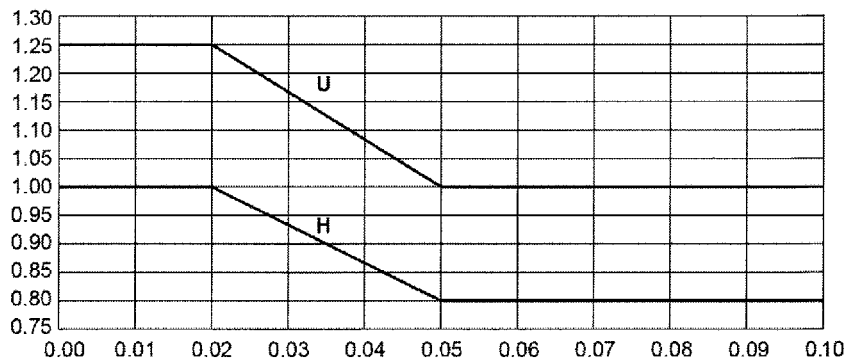

Wall Thickness / ID Ratio for Integral Tubesheets

NOTE: If the tubesheet is integral with both the tube side and the shell side, Wall Thickness and ID are to be based on the side yielding the smaller value of F.

See Table A.1.3.1 for illustration of the application of the above equations.

 ©Tubular Exchanger Manufacturers Association, Inc.

TABLE A.1.3.1

	TUBESHEET THICKNESS FOR BENDING			
	$T = \frac{FG}{3}\sqrt{\frac{P}{\eta S}}$		Note: Must be calculated for shell side or tube side pressure, whichever is controlling.	
	For Tube pattern □◇, $\eta = 1 - \left[\frac{0.785}{(Pitch/Tube\ OD)^2}\right]$ For integrally finned tubes, the OD of the tube in the tubesheet shall be used		For Tube pattern ▷△, $\eta = 1 - \left[\frac{0.907}{(Pitch/Tube\ OD)^2}\right]$ For integrally finned tubes, the OD of the tube in the tubesheet shall be used	S = Code allowable stress in tension, psi (kPa), for tubesheet material at design metal temperature. (See Paragraph RCB-1.4.2.)
	F	*G*		*P*
		Shell Side Pressure	Tube Side Pressure	
(a) 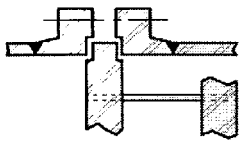	1.0	Gasket G shell side See note 1	Gasket G tube side See note 1	Design pressure, psi (kPa), shell side or tube side, per Paragraph A.1.3.1 corrected for vacuum when present on opposite side or differential pressure when specified by customer.
(b) 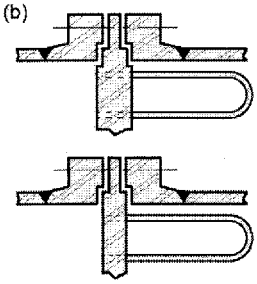	1.25	Gasket G shell side See note 1	Gasket G tube side See note 1	Design pressure, psi (kPa), shell side or tube side, per Paragraph A.1.3.1 corrected for vacuum when present on opposite side or differential pressure when specified by customer.
(c) 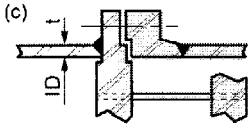	See Figure A.1.3.1 $F = \frac{\left[17 - 100\left(\frac{t}{ID}\right)\right]}{15}$ Note: F Max = 1.0 F Min = 0.8	Gasket G shell side See note 1	Channel ID	Design pressure, psi (kPa), shell side or tube side, per Paragraph A.1.3.1 corrected for vacuum when present on opposite side or differential pressure when specified by customer, or fixed tubesheet type units, as defined in Paragraphs A.1.5.3 thru A.1.5.5
(d) 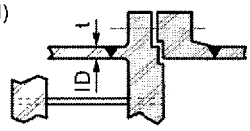		Shell ID or port inside diameter for kettle type exchangers	Gasket G (shell ID if fixed tubesheet type unit) See note 1	
(e) 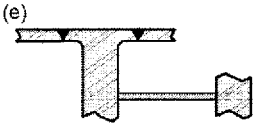		Shell ID or port inside diameter for kettle type exchangers	Channel ID (shell ID if fixed tubesheet type unit)	

©Tubular Exchanger Manufacturers Association, Inc.

TABLE A.1.3.1 (Continued)

	F	*G*		*P*
		Shell Side Pressure	Tube Side Pressure	
(f) 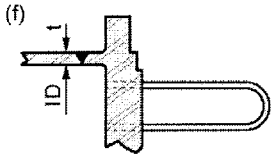	See Figure A.1.3.1 $F = \frac{\left[17 - 100\left(\frac{t}{ID}\right)\right]}{12}$ Note: F Max = 1.25 F Min = 1.00	Gasket G shell side See note 1	Channel ID	Design pressure, psi (kPa), shell side or tube side, per Paragraph A.1.3.1 corrected for vacuum when present on opposite side or differential pressure when specified by customer.
(g) 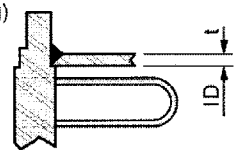		Shell ID or port inside diameter for kettle type exchangers	Gasket G tube side See note 1	
(h) 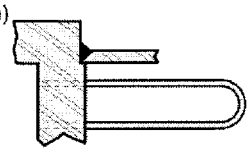		Shell ID or port inside diameter for kettle type exchangers	Channel ID	
(i) 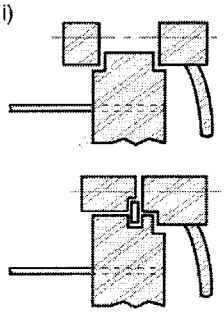	1.0	Same G as used for stationary tubesheet		Design pressure, psi (kPa), shell side, or tube side, per Paragraph A.1.3.1 corrected for vacuum when present on opposite side or differential pressure when specified by customer.
(j) 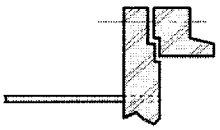	1.0	Same G as used for stationary tubesheet. Also check using gasket G of the floating tubesheet. See note 1.		see Paragraph A.1.3.1
(k) 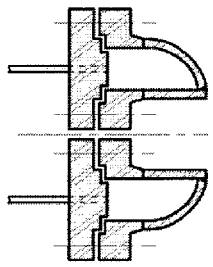	1.0	G = 1.41(d) d = Shortest span measured over centerlines of gaskets.		Design pressure, psi (kPa), shell side, or tube side, per Paragraph A.1.3.1 corrected for vacuum when present on opposite side, or differential pressure when specified by customer.
(l) 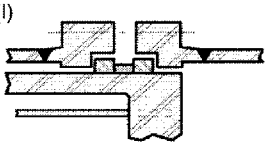	1.0	Same G as used for stationary tubesheet		Design pressure, psi (kPa), tube side per Paragraph A.1.3.1 corrected for vacuum when present on the shell side.
(m) 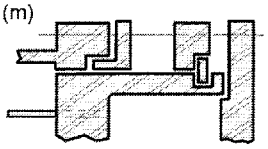	1.0	Same G as used for stationary tubesheet		Defined in Paragraph A.1.4.1.1

Note: 1. Gasket G = the diameter at the location of the gasket load reaction as defined in the Code.

 ©Tubular Exchanger Manufacturers Association, Inc.

A.1.3.2 TUBESHEET FORMULA - SHEAR

$$T = \frac{0.31 D_L}{\left(1 - \frac{d_0}{Pitch}\right)} \left(\frac{P}{S}\right)$$

where

T = Effective tubesheet thickness, in. (mm)

$D_L = \frac{4A}{C}$ = Equivalent diameter of the tube center limit perimeter, in. (mm)

C = Perimeter of the tube layout measured stepwise in increments of one tube pitch from center-to-center of the outermost tubes, in. (mm). Figure A.1.3.2 shows the application to typical triangular and square tube patterns

FIGURE A.1.3.2

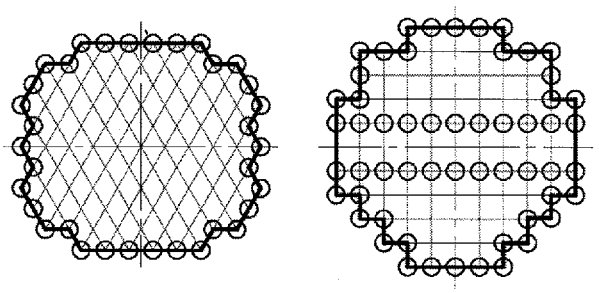

"C " (perimeter) is the length of the heavy line

A = Total area enclosed by perimeter C, in^2 (mm^2)

d_0 = Outside tube diameter, in. (mm), for integrally finned tubes, the OD of the tube in the tubesheet shall be used.

$Pitch$ = Tube center-to-center spacing, in. (mm)

P = For outside packed floating head exchangers (Type P), P shall be as defined in Paragraph A.1.4.1, psi (kPa).

For fixed tubesheet exchangers, P shall be as defined in Paragraph A.1.5.3, A.1.5.4, or A.1.5.5, psi (kPa).

For other type exchangers, P shall be the design pressure, shell side or tube side, corrected for vacuum when present on the opposite side, or differential pressure when specified by the purchaser, psi (kPa).

S = Code allowable stress in tension, psi (kPa), for tubesheet material at design metal temperatures (see Paragraph RCB-1.4.2)

NOTE: Shear will not control when

$$\left(\frac{P}{S}\right) < 1.6\left(1 - \frac{d_0}{Pitch}\right)^2$$

See Table A.1.3.2 for illustration of the application of the above equations.

 ©Tubular Exchanger Manufacturers Association, Inc.

TABLE A.1.3.2

	TUBESHEET THICKNESS FOR SHEAR		
	$T = \left[\dfrac{0.31 D_L}{(1 - d_0/Pitch)}\right]\left(\dfrac{P}{S}\right)$		Note: Must be calculated for shell side or tube side pressure, whichever is controlling.
	d0 = Outside tube diameter, in. (mm). For integrally finned tubes, the OD of the tube in the tubesheet shall be used.	Pitch = Tube spacing, center-to-center, in. (mm)	S = Code allowable stress in tension, psi (kPa). For tubesheet material at design metal temperature. (See Paragraph RCB-1.4.2)
	P		D_L
(a) 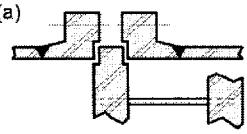	Design pressure, psi (kPa), shell side or tube side, corrected for vacuum when present on opposite side, or differential pressure when specified by customer.		$D_L = 4\left(\dfrac{A}{C}\right)$ C = Perimeter of tube layout measured stepwise in increments of one tube-to-tube pitch center-to-center of the outermost tubes, in. (mm). See Figure A.1.3.2 A = total area enclosed by C, in^2 (mm^2). See Figure A.1.3.2
(b) 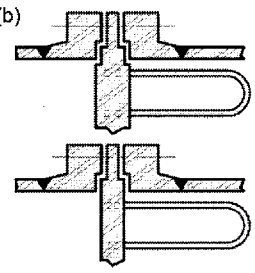	Design pressure, psi (kPa), shell side or tube side, corrected for vacuum when present on opposite side, or differential pressure when specified by customer.		
(c) 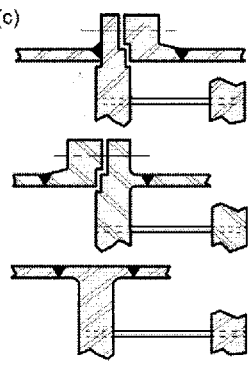	Design pressure, psi (kPa), shell side or tube side, corrected for vacuum when present on opposite side, or differential pressure when specified by customer, or for fixed tubesheet type units, as defined in paragraphs A.1.5.3 thru A.1.5.5.		

TABLE A.1.3.2 Continued next page

 ©Tubular Exchanger Manufacturers Association, Inc.

TABLE A.1.3.2 Continued

	P	D_L
(d) 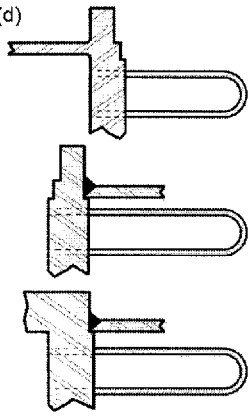	Design pressure, psi (kPa), shell side or tube side, corrected for vacuum when present on opposite side, or differential pressure when specified by customer.	$D_L = 4\left(\frac{A}{C}\right)$ C = Perimeter of tube layout measured stepwise in increments of one tube-to-tube pitch center-to-center of the outermost tubes, in. (mm). See Figure A.1.3.2 A = total area enclosed by C, in^2 (mm^2). See Figure A.1.3.2
(e) 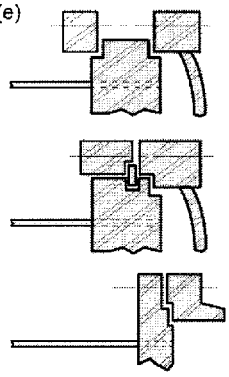	Design pressure, psi (kPa), shell side or tube side, corrected for vacuum when present on opposite side, or differential pressure when specified by customer.	
(f) 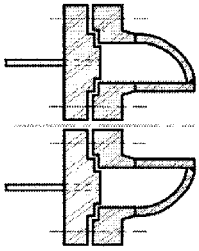	Design pressure, psi (kPa), shell side or tube side, corrected for vacuum when present on opposite side, or differential pressure when specified by customer.	
(g) 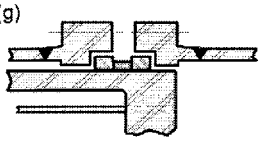	Design pressure, psi (kPa), tube side, corrected for vacuum when present on shell side.	
(h) 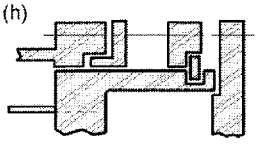	Defined in Paragraph A.1.4.1.2	

 ©Tubular Exchanger Manufacturers Association, Inc.

A.1.3.3 TUBESHEET FORMULA - TUBESHEET FLANGED EXTENSION

This paragraph is applicable only when bolt loads are transmitted, at the bolt circle, to the extended portion of a tubesheet. The peripheral portion extended to form a flange for bolting to heads or shells with ring type gaskets may differ in thickness from that portion inside the shell calculated in Paragraph A.1.3.1. The minimum thickness of the extended portion may be calculated from the following equation.

$$T_r = 0.98\left[\frac{M\left(r^2 - 1 + 3.71r^2 \ln r\right)}{S\left(A-G\right)\left(1+1.86r^2\right)}\right]^{1/2}$$

where

T_r = Minimum thickness of the extended portion, in. (mm)

A = Outside diameter of the tubesheet, in. (mm)

$r = \dfrac{A}{G}$

M = the larger of M_1 or M_2 as defined in Paragraph A.1.5.2.

NOTE: The moments may differ from the moments acting on the attached flange. S and G are defined in Paragraph A.1.3.1.

 ©Tubular Exchanger Manufacturers Association, Inc.

A.1.4 PACKED FLOATING TUBESHEET TYPE EXCHANGERS EFFECTIVE PRESSURE

A.1.4.1 OUTSIDE PACKED FLOATING HEAD (TYPE P)

The thickness of tubesheets in exchangers whose floating heads are packed at the outside diameter of the tubesheet or a cylindrical extension thereof shall be calculated like stationary tubesheets using the formulas for P as defined below.

A.1.4.1.1 EFFECTIVE DESIGN PRESSURE – BENDING

The effective design pressure to be used with the formula shown in Paragraph A.1.3.1 is given by:

$$P = P_t + P_s\left[\frac{1.25\left(D^2 - D_c^{\,2}\right)\left(D - D_c\right)}{DF^2G^2}\right]$$

where

P_t = Design pressure, psi (kPa), tube side
(For vacuum design, P_t is negative.)

P_s = Design pressure, psi (kPa), shell side
(For vacuum design, P_s is negative.)

D = Outside diameter of the floating tubesheet, in. (mm)

$D_c = \sqrt{\dfrac{4A}{\pi}}$ Equivalent diameter of the tube center limit perimeter, in. (mm), using A as defined in Paragraph A.1.3.2

F and G are as defined in Paragraph A.1.3.1

A.1.4.1.2 EFFECTIVE DESIGN PRESSURE - SHEAR

The effective design pressure to be used with the formula shown in Paragraph A.1.3.2 is given by:

$$P = P_t + P_s\left(\frac{D^2 - D_c^{\,2}}{D_c^{\,2}}\right)$$

using terms as defined in Paragraph A.1.4.1.1.

A.1.4.2 PACKED FLOATING TUBESHEET WITH LANTERN RING (TYPE W)

The thickness of floating tubesheets in exchangers whose floating tubesheets are packed at the outside diameter with return bonnet or channel bolted to the shell flange, shall be calculated as for gasketed stationary tubesheet exchangers, using P defined as the tube side design pressure, psi (kPa), corrected for vacuum when present on the shell side. It is incorrect to utilize the shell side pressure.

 ©Tubular Exchanger Manufacturers Association, Inc.

A.1.5 FIXED TUBESHEET EFFECTIVE PRESSURE

This paragraph shall apply to exchangers having tubesheets fixed to both ends of the shell, with or without a shell expansion joint except as required or permitted by Paragraph A.3. Both tubesheets of fixed tubesheet exchangers shall have the same thickness, unless the provisions of Paragraph A.1.5.6 are satisfied.

For fixed tubesheet exchangers, the mutually interdependent loads exerted on the tubesheets, tubes, and shell are defined in terms of equivalent and effective design pressures in Paragraphs A.1.5.1 through A.1.5.5 for use in Paragraphs A.1.3.1 and A.1.3.2. These pressures shall also be used (with $J=1$) in Paragraphs A.2.2, A.2.3 and A.2.5 to assess the need for an expansion joint. The designer shall consider the most adverse operating conditions specified by the purchaser. (See Paragraph E-3.2.)

A.1.5.1 EQUIVALENT DIFFERENTIAL EXPANSION PRESSURE

The pressure due to differential thermal expansion, psi (kPa), is given by:

$$P_d = \frac{4 J E_S t_S \left(\frac{\Delta L}{Lt}\right)}{\left(D_0 - 3t_S\right)\left(1 + J K F_q\right)}$$

Note: Algebraic sign must be retained for use in Paragraphs A.1.5.3 through A.1.5.6, A.2.2 and A.2.3.

where

$J =$ 1.0 for shells without expansion joints

$J = \dfrac{K_j L}{K_j L + \pi\left(D_0 - t_s\right) t_s E_s}$ for shells with expansion joints. See Note (1).

$K_j =$ Spring rate of the expansion joint, lbs/in. (kN/mm)

$$K = \frac{E_S t_S \left(D_0 - t_S\right)}{E_t t_t N \left(d_0 - t_t\right)}$$

$$F_q = 0.25 + \left(F - 0.6\right)\left[\frac{300 t_s E_s}{K L E}\left(\frac{G}{T}\right)^3\right]^{1/4}$$

(Use the calculated value of F_q or 1.0, whichever is greater.)

F and G are as defined in Paragraph A.1.3.1.

 ©Tubular Exchanger Manufacturers Association, Inc.

$T =$ Tubesheet thickness used, but not less than 98.5% of the greater of the values defined by Paragraph A.1.3.1 or A.1.3.2. (The value assumed in evaluating Fq must match the final computed value within a tolerance of ± 1.5%). See Note (2).

$L =$ Tube length between inner tubesheet faces, in. (mm).

$\Delta L =$ Differential thermal growth (shell – tubes), in. (mm). (See Section 7, Paragraph T-4.5).

$L_t =$ Tube length between outer tubesheet faces, in. (mm).

$E_s =$ Elastic modulus of the shell material at mean metal temperature, psi (kPa). (See Paragraph RCB-1.4.3.1). See Note (3).

$E_t =$ Elastic modulus of the tube material at mean metal temperature, psi (kPa). (See Paragraph RCB-1.4.3.2).

$E =$ Elastic modulus of the tubesheet material at mean metal temperature, psi (kPa). (See Paragraph RCB-1.4.3.2).

$N =$ Number of tubes in the shell.

$D_0 =$ Outside diameter of the shell or port for kettle type exchangers, in. (mm).

$d_0 =$ Outside diameter of the tubes (for integrally finned tubes, d_0 is root diameter of fin), in. (mm).

$t_t =$ Tube wall thickness (for integrally finned tubes, t_t is wall thickness under fin), in. (mm).

$t_s =$ Shell wall thickness or port wall thickness for kettle type exchangers, in. (mm).

Notes:

(1) J can be assumed equal to zero for shells with expansion joints where

$$K_j < \frac{(D_0 - t_s)t_s E_s}{10L}$$

(2) Tubesheets thicker than computed are permissible provided neither shell nor tubes are overloaded. See Paragraph A.2.

(3) For Kettle type,

$$E_s = \frac{E_{SH} L}{(2L_P) + \left[(4L_C T_P D_P)/((D_P + D_K)T_C)\right] + \left[(L_K T_P D_P)/(D_K T_K)\right]}$$

where

$E_{SH} =$ Elastic modulus of the shell material at mean metal temperature, psi (kPa). (See Paragraph RCB-1.4.3.1).

$L =$ Tube length between inner tubesheet faces, in. (mm).

$L_P =$ Length of kettle port cylinder, in. (mm).

$T_P =$ Kettle port cylinder thickness, in. (mm).

$D_P =$ Mean diameter of kettle port cylinder, in. (mm).

$L_K =$ Length of kettle cylinder, in. (mm).

$T_K =$ Kettle cylinder thickness, in. (mm).

$D_K =$ Mean diameter of kettle cylinder, in. (mm).

$L_C =$ Axial length of kettle cone, in. (mm).

$T_C =$ Kettle cone thickness, in. (mm).

 ©Tubular Exchanger Manufacturers Association, Inc.

A.1.5.2 EQUIVALENT BOLTING PRESSURE

When fixed tubesheets are extended for bolting to heads with ring type gaskets, the extension and that portion of the tubesheets inside the shell may differ in thickness. The extension shall be designed in accordance with paragraph A.1.3.3. The effect of the moment acting upon the tubesheet extension shall be accounted for in subsequent paragraphs in terms of equivalent tube side and shell side bolting pressures which are defined as:

$$P_{Bt} = \frac{6.2\,M_1}{F^2\,G^3}$$

$$P_{Bs} = \frac{6.2\,M_2}{F^2\,G^3}$$

where

F and G are defined in Paragraph A.1.3.1

$M_1 =$ Total moment acting upon the extension under operating conditions, defined by the Code as M_0 under flange design, lbf-in (mm-kN).

$M_2 =$ Total moment acting upon the extension under bolting-up conditions, defined by the Code as M_0 under flange design, lbf-in (mm-kN).

$P_{Bt} =$ Equivalent bolting pressure when tube side pressure is acting, psi (kPa).

$P_{Bs} =$ Equivalent bolting pressure when tube side pressure is not acting, psi (kPa).

A.1.5.3 EFFECTIVE SHELL SIDE DESIGN PRESSURE

The effective shell side design pressure is to be taken as the greatest absolute value of the following:

$$P = \frac{P_s' - P_d}{2}$$

or $P = P_s'$

or $P = P_{Bs}$

or $P = \dfrac{P_s' - P_d - P_{Bs}}{2}$

or $P = \dfrac{P_{Bs} + P_d}{2}$

or $P = P_s' - P_{Bs}$

where

$$P_s' = P_s\left[\frac{0.4\,J\left[1.5 + K\left(1.5 + f_s\right)\right] - \left[\left(\frac{1-J}{2}\right)\left(\frac{D_J^{\,2}}{G^2} - 1\right)\right]}{1 + J\,K\,F_q}\right]$$

$P_s =$ Shell side design pressure, psi (kPa) (For vacuum design, P_s is negative.)

$$f_s = 1 - N\left(\frac{d_0}{G}\right)^2$$

$G =$ Inside diameter of the shell, in. (mm)

$D_j =$ Maximum expansion joint inside diameter, in. (mm)
($D_j = G$ when no expansion joint is present.)

Other symbols are as defined under Paragraphs A.1.5.1 and A.1.5.2.

Notes:

(1) Algebraic sign of P_s' must be used above, and must be retained for use in Paragraphs A.1.5.4, A.1.5.5, A.1.5.6, A.2.2 and A.2.3.

(2) When J=0, formulae containing P_d will not control.

(3) Delete the term P_{Bs} in the above formulae for use in Paragraph A.1.3.2.

(4) For kettle type, G = port inside diameter.

A.1.5.4 EFFECTIVE TUBE SIDE DESIGN PRESSURE

The effective tube side design pressure is to be taken as the greatest absolute value of the following:

$$P = \frac{P_t' + P_{Bt} + P_d}{2}$$

or $P = P_t' + P_{Bt}$

when P_s' is positive

$$P = \frac{P_t' - P_s' + P_{Bt} + P_d}{2}$$

or $P = P_t' - P_s' + P_{Bt}$

when P_s' is negative

where

$$P_t' = P_t\left[\frac{1 + 0.4\,J\,K\left(1.5 + f_t\right)}{1 + J\,K\,F_q}\right]$$

$P_t =$ Tube side design pressure, psi (kPa) (For vacuum design, P_t is negative.)

$$f_t = 1 - N\left(\frac{d_0 - 2t_t}{G}\right)^2$$

$G =$ Inside diameter of the shell, in. (mm)

Other symbols are as defined under Paragraphs A.1.5.1, A.1.5.2, and A.1.5.3.

Notes:

(1) Algebraic sign of P_t' must be used above, and must be retained for use in Paragraphs A.1.5.5, A.1.5.6, A.2.2, and A.2.3.

(2) When J = 0,

a) Formulae containing P_d will not control.

b) When P_s and P_t are both positive the following formula is controlling:

$$P = P_t + \frac{P_s}{2}\left[\left(\frac{D_j}{G}\right)^2 - 1\right] + P_{Bt}$$

(3) Delete the term P_{Bt} in the above formulae for use in Paragraph A.1.3.2.

(4) For kettle type, G = port inside diameter.

 ©Tubular Exchanger Manufacturers Association, Inc.

A.1.5.5 EFFECTIVE DIFFERENTIAL DESIGN PRESSURE

Under certain circumstances the Code and other regulatory bodies permit design on the basis of simultaneous action of both shell and tube side pressures. The effective differential design pressure for fixed tubesheets under such circumstances is to be taken as the greatest absolute value of the following:

$$P = P_t' - P_s' + P_{Bt}$$

or $$P = \frac{P_t' - P_s' + P_{Bt} + P_d}{2}$$

or $$P = P_{Bs}$$

or $$P = \frac{P_{Bs} + P_d}{2}$$

or $$P = P_t' - P_s'$$

or $$P = \frac{P_t' - P_s' + P_d}{2}$$

or $$P = P_{Bt}$$

where

P_d, P_{Bs}, P_{Bt}, P_s' and P_t' are as defined in Paragraphs A.1.5.1, A.1.5.2, A.1.5.3, and A.1.5.4.

Notes:

(1) It is not permissible to use ($P_s - P_t$) in place of P_s to calculate P_s' in Paragraph A.1.5.3, and it is not permissible to use (P_t - P_s) in place of P_t to calculate P_t' in Paragraph A.1.5.4.

(2) When $J = 0$, the formulae containing P_d will not control.

(3) Delete the terms P_{Bs} and P_{Bt} in the above formulae for use in Paragraph A.1.3.2.

A.1.5.6 FIXED TUBESHEETS OF DIFFERING THICKNESSES

The rules presented in paragraph A.1.5.1 through A.1.5.5 and A.2 are intended for fixed tubesheet exchangers where both tubesheets are the same thickness. Conditions can exist where it is appropriate to use tubesheets of differing thicknesses. These conditions may result from significantly differing elastic moduli and/or allowable stresses. The following procedure may be used for such cases:

(1) Separate the design parameters as defined in previous paragraphs for each tubesheet system by assigning subscripts A and B to each of the following terms:

T as T_A and T_B

L as L_A and L_B where $L_A + L_B = 2L$

E as E_A and E_B

F_q as F_{qA} and F_{qB}

Note: The values of M_1, M_2, F, G, ΔL, L_t, D_0, t_s, d_0, t_t, E_s, E_t, N, and K_j must remain constant throughout this analysis. If a fixed tubesheet exchanger has different bolting moments at each tubesheet, the designer should use the values of M_1 and M_2 that produce the conservative design.

(2) Calculate T_A per Paragraphs A.1.5.1 through A.1.5.5 assuming that both tubesheets have the properties of subscript A and $L_A = L$.

 ©Tubular Exchanger Manufacturers Association, Inc.

(3) Calculate T_B per Paragraphs A.1.5.1 through A.1.5.5 assuming that both tubesheets have the properties of subscript B and $L_B = L$.

(4) Calculate L_A and L_B as follows:

$$L = L_t - T_A - T_B$$

$$L_B = \frac{2L}{\left[1 + \left(\frac{E_B}{E_A}\right)\left(\frac{T_B}{T_A}\right)^3\right]}$$

$$L_A = 2L - L_B$$

(5) Recalculate T_A per Paragraphs A.1.5.1 through A.1.5.5 using the properties of subscript A and L_A from step 4.

(6) Recalculate T_B per Paragraphs A.1.5.1 through A.1.5.5 using the properties of subscript B and L_B from step 4.

(7) Repeat steps 4 through 6 until values assumed in step 4 are within 1.5% of the values calculated in step 5 for T_A and step 6 for T_B.

(8) Round T_A and T_B up to an appropriate increment and recalculate L_A and L_B per step 4.

(9) Calculate the shell and tube stresses and the tube-to-tubesheet joint loads per Paragraph A.2 for each tubesheet system using the appropriate subscripted properties.

Note: The shell and tube stresses and tube-to-tubesheet joint loads for each tubesheet system should theoretically be identical. Small differences may exist, however, because of rounding the calculated tubesheet thicknesses in step 8. The tube stress and the tube-to-tubesheet joint loads from the two systems should be averaged before comparing these values to the allowable values as calculated in Paragraph A.2.

A.2 SHELL AND TUBE LONGITUDINAL STRESSES – FIXED TUBESHEET EXCHANGERS

Shell and tube longitudinal stresses, which depend upon the equivalent and effective pressures determined by Paragraphs A.1.5.1 through A.1.5.4, shall be calculated for fixed tubesheet exchangers with or without shell expansion joints by using the following paragraphs. The designer shall consider the most adverse operating conditions specified by the purchaser. (See Paragraph E-3.2.)

Note: The formulae and design criteria presented in Paragraphs A.2.3 through A.2.5 consider only the tubes at the periphery of the bundle, which are normally the most highly stressed tubes. Additional consideration of the tube stress distribution throughout the bundle may be of interest to the designer under certain conditions of loading and/or geometry. See the "Recommended Good Practice" section of these Standards for additional information.

A.2.1 HYDROSTATIC TEST

Hydrostatic test conditions can impose excessive shell and/or tube stresses. These stresses can be calculated by substituting the pressures and temperatures at hydrostatic test for the appropriate design pressures and metal temperatures in the paragraphs that follow and in Paragraphs A.1.5.1 through A.1.5.4 where applicable.

A.2.2 SHELL LONGITUDINAL STRESS

The effective longitudinal shell stress is given by:

$$S_s = \frac{C_s\left(D_0 - t_s\right)P_s^*}{4t_s}$$

where

$C_s =$ 1.0 except as noted below

$P_s^* =$ P_1 Note (2)

or $P_s^* = P_s'$ Note (2)

or $P_s^* = -P_d$ Note (1)

or $P_s^* = P_1 + P_s'$

or $P_s^* = P_1 - P_d$ Notes (1) and (2)

or $P_s^* = P_s' - P_d$ Notes (1) and (2)

or $P_s^* = P_1 + P_s' - P_d$ Note (1)

where

$P_1 = P_t - P_t'$

Other symbols are as defined in Paragraphs A.1.5.1, A.1.5.3, and A.1.5.4, using actual shell and tubesheet thicknesses and retaining algebraic signs.

Notes:

(1) If the algebraic sign of P_s^* is positive, $C_s = 0.5$.

(2) This formula is not applicable for differential pressure design per Paragraph A.1.5.5.

A condition of overstress shall be presumed to exist when the largest absolute value of S_s exceeds the Code allowable stress in tension for the shell material at design temperature, or 90% of yield stress at hydrostatic test, or when the greatest negative value of S_s exceeds the Code allowable stress in compression at design temperature.

A.2.3 TUBE LONGITUDINAL STRESS - PERIPHERY OF BUNDLE

The maximum effective longitudinal tube stress, psi (kPa), at the periphery of the bundle is given by:

$$S_t = \frac{C_t F_q P_t^* G^2}{4 N t_t (d_0 - t_t)}$$

where

$C_t = 1.0$ except as noted below

$P_t^* = P_2$ Note (2)

or $P_t^* = -P_3$ Note (2)

or $P_t^* = P_d$ Notes (1) and (2)

or $P_t^* = P_2 - P_3$

or $P_t^* = P_2 + P_d$ Notes (1) and (2)

or $P_t^* = -P_3 + P_d$ Notes (1) and (2)

or $P_t^* = P_2 - P_3 + P_d$ Note (1)

where

$$P_2 = P_t' - \left(\frac{f_t P_t}{F_q}\right)$$

$$P_3 = P_s' - \left(\frac{f_s P_s}{F_q}\right)$$

Other symbols are as defined in Paragraphs A.1.5.1, A.1.5.3, and A.1.5.4, using actual shell and tubesheet thicknesses and retaining algebraic signs.

 ©Tubular Exchanger Manufacturers Association, Inc.

Notes:

(1) If the algebraic sign of P_t* is positive, $C_t = 0.5$.

(2) This formula is not applicable for differential pressure design per Paragraph A.1.5.5.

A condition of overstress shall be presumed to exist when the largest positive value of S_t exceeds the Code allowable stress in tension for the tube material at design temperature, or 90% of yield stress at hydrostatic test, or when the greatest negative value of S_t exceeds the allowable compressive stress as determined in accordance with Paragraph A.2.4.

A.2.4 ALLOWABLE TUBE COMPRESSIVE STRESS - PERIPHERY OF BUNDLE

The allowable tube compressive stress, psi (kPa), for the tubes at the periphery of the bundle is given by:

$$S_c = \frac{\pi^2 E_t}{F_s \left(\frac{kl}{r}\right)^2} \qquad \text{when} \quad C_c \le \frac{kl}{r}$$

or

$$S_c = \frac{S_y}{F_s}\left[1 - \frac{\left(\frac{kl}{r}\right)}{2C_c}\right] \qquad \text{when} \quad C_c > \frac{kl}{r}$$

where

$$C_c = \sqrt{\frac{2\pi^2 E_t}{S_y}}$$

$S_y =$ Yield stress, psi (kPa), of the tube material at the design metal temperature. (See Paragraph RCB-1.4.2)

$r =$ Radius of gyration of the tube, in. (mm), given by:

$r = 0.25\sqrt{d_0^{\,2} + (d_0 - 2t_t)^2}$ (See Table D-7.)

$kl =$ Equivalent unsupported buckling length of the tube, in. (mm). The largest value considering unsupported tube spans shall be used.

$l =$ Unsupported tube span, in. (mm).

$k =$
- 0.6 for unsupported spans between two tubesheets
- 0.8 for unsupported spans between a tubesheet and a tube support
- 1.0 for unsupported spans between two tube supports

$F_s =$ Factor of safety given by:

$F_s = 3.25 - 0.5F_q$

Note: F_s shall not be less than 1.25 and need not be taken greater than 2.0. Other symbols are as defined in Paragraph A.1.5.1.

Note: The allowable tube compressive stress shall be limited to the smaller of the Code allowable stress in tension for the tube material at the design metal temperature (see Paragraph RCB-1.4.2) or the calculated value of S_c.

 ©Tubular Exchanger Manufacturers Association, Inc.

A.2.5 TUBE-TO-TUBESHEET JOINT LOADS - PERIPHERY OF BUNDLE

The maximum effective tube-to-tubesheet joint load, lbs. (kN), at the periphery of the bundle is given by:

$$W_j = \frac{\pi F_q P_t^* G^2}{4N}$$

where

$P_t^* = P_2$ Note (1)

or $P_t^* = -P_3$ Note (1)

or $P_t^* = P_2 - P_3$

P_2 and P_3 are as defined in Paragraph A.2.3. Other symbols are as defined in Paragraphs A.1.5.1, A.1.5.3 and A.1.5.4, using the actual shell and tubesheet thicknesses.

Note: (1) This formula is not applicable for differential pressure design per Paragraph A.1.5.5.

The allowable tube-to-tubesheet joint loads as calculated by the Code or other means may be used as a guide in evaluating W_j.

The tube-to-tubesheet joint loads calculated above consider only the effects of pressure loadings. The tube-to-tubesheet joint loads caused by restrained differential thermal expansion between shell and tubes are considered to be within acceptable limits if the requirements of Paragraph A.2.3 are met.

A.2.6 DISPLACEMENTS FOR EXPANSION JOINT CALCULATIONS

When an expansion joint is present, a displacement shall be calculated as follows for each of the load cases in A.2.2 and the expansion joint shall be designed for that entire range.

When the expansion joint is a thin-walled bellows or when the expansion joint design method requires the displacement over the length of the joint, the displacement shall be:

$$\Delta_j = \frac{(G + t_s)L}{4Jt_sE_s}P_s^* + \frac{\pi}{8}\frac{D_j^2 - G^2}{K_j}P_s$$

When the expansion joint consists of flexible shell elements per RCB-8, the displacement over the length of the shell, without the shell thermal growth, shall be:

$$\Delta_s = \frac{(G + t_s)L}{4Jt_sE_s}P_s^* - \frac{G^2\nu_sL}{2t_s(G + t_s)E_s}P_s + \frac{\pi}{8}\frac{D_j^2 - G^2}{K_j}P_s$$

When the expansion joint design method requires the displacement over the length of the shell, including the shell thermal growth, the displacement over the length of the shell shall be:

$$\Delta_s^T = \frac{(G + t_s)L}{4Jt_sE_s}P_s^* + L\alpha_s(T_M - T_a) - \frac{G^2\nu_sL}{2t_s(G + t_s)E_s}P_s + \frac{\pi}{8}\frac{D_j^2 - G^2}{K_j}P_s$$

where:

ν_s = Poisson's ratio for the shell material

The P_s^* values are the (7) cases as calculated in A.2.2.

$P_s = 0$ in cases where $P_s' = 0$; shell side pressure, otherwise

α_s and T_M are as defined in Section 7, T-4.5

T_a = ambient temperature, °F (°C)

All other terms are defined in A.1.5.1

 ©Tubular Exchanger Manufacturers Association, Inc.

A.3 SPECIAL CASES

Special consideration must be given to tubesheet designs with abnormal conditions of support or loading. Following are some typical examples:

(1) Exchangers with large differences in shell and head inside diameters; e.g. fixed tubesheets with kettle type shell.

(2) The adequacy of the staying action of the tubes during hydrostatic test; e.g., with test rings for types S and T, or types P and W.

(3) Vertical exchangers where weight and/or pressure drop loadings produce significant effects relative to the design pressures.

(4) Extreme interpass temperature differentials.

Consideration may also be given to special design configurations and/or methods of analysis which may justify reduction of the tubesheet thickness requirements.

 ©Tubular Exchanger Manufacturers Association, Inc.

A

Acoustic Frequency of Shell 6-21
Acoustic Resonance or Coupling ..... 6-1, 6-20 – 6-21
Air Test, Supplementary 5.1-2
Alignment Rod 5.4-9
Alloy,
- Corrosion Allowance 5.1-3
- Mean Coefficients of Thermal Expansion .... 9-1, 9-53 – 9-58
- Minimum Thickness 5.3-1, 5.9-1
- TEMA Definition 5.1-1

Anodes 4-4, 5.1-4
Area,
- Bundle/Shell Entrance and Exit ..... 5.4-6 – 5.4-7, 6.2, 10-24 – 10-30
- Gasket Rib Partition 5.11-2
- Slot Area 10-25

ASME Code Data Reports ..... 3-4 – 3-5
ASME PCC-1 ..... 2-3, 4-3, 5.11-2, 10-32
ASME Standard Flanges, Dimensions ..... 2-3, 9-5 – 9-23

B

B Class Heat Exchanger, TEMA Definition 5.1-1
Backing Devices, Styles 5.5-1
Backing Devices, Formulas ..... 5.5-1 – 5.5-2
Baffles and Support Plates,
- Clearances 5.4-2, 5.4-8
- Corrosion Allowance 5.1-3
- Cuts 5.2-3, 5.4-1, 5.4-8, 6-17, 6-21, 6-26, 10-25
- De-tuning (Also De-resonating) 6-23
- Longitudinal ..... 5.4-3 – 5.4-4
- Maximum Spacing ..... 5.4-4 – 5.4-5
- Minimum Spacing 5.4-4
- Minimum Thickness ..... 5.4-2 – 5.4-4
- Multi-Segmental 5.4-1, 6-25
- No Tubes in Window 6-26
- Segmental 5.4-1, 5.4-4, 6-15, 6-21, 6-25
- Spacing ..... 5.4-4 – 5.4-5
- Special Cases 5.4-5
- Special Precautions 5.4-4
- Thickness ..... 5.4-2 – 5.4-4, 6-26
- Transverse ..... 5.4-1 – 5.4-2
- Tube Holes 5.4-1, 6-1, 6-15, 6-26
- Type 5.4-1
- U-bend Regions 5.4-5, 6-26
- Unsupported Tube Span ..... 5.4-1 – 5.4-5, 6-1 – 6-3, 6-25 – 6-26

Bend Spacing 5.2-2
Bolt Circle Layout, ... 5.11-1
- Load Concentration Factor 5.11-1
- Maximum Spacing 5.11-1
- Minimum Spacing 5.11-1
- Orientation 5.11-1
- Wrench and Nut Clearances 5.11-1

Bolted Joints 4-3
Bolting,
- Assembly and Maintenance 5.11-2
- Collar Studs ..... 5.11-2 – 5.11-3
- Cross Bolting Pattern ..... 4-3 – 4.-4
- Dimensional Data ..... 9-39 – 9-40
- Floating Head Backing Devices ..... 5.1-3, 5.5-1 – 5.5-2
- Internal Floating Head ..... 5.1-3, 5.5-1 – 5.5-2, 5.6-1
- Recommended Bolt Tightening Procedure ..... 4-3 – 4-4
- Size 5.11-1
- Stacked Units 5.10-2, 10-2

Bolt Stress 4-3, 10-32
Bolt Torque ..... 4-3, 4-7, 5.11-2 – 5.11-3
Bonnets,
- Minimum Inside Depth 5.9-1
- Minimum Thickness 5.9-1
- Nomenclature ..... 1-2 - 1-3
- Pass Partition Gaskets 5.6-1
- Post Weld Heat Treatment 5.9-2

Bundle Cleaning Methods ..... 4-6 – 4-7
Bundle Entrance and Exit Area 5.4-6
Bundle Hold Down 5.4-9
Bundle Skid and Alignment Devices 5.4-9
By-Pass Seals, ... 5.4-8
- Attachment 5.4-8
- Type 5.4-8

By-Pass Valves 4-2

C

C Class Heat Exchanger, TEMA Definition 5.1-1
Carbon Steel 5.1-1
Cast Iron ..... 5.1-3 – 5.1-4, 5.6-1
Changes to Configuration 4-8
Channel Cover, ... 5.9-2 – 5.9-3
- Deflection Formula ..... 5.9-2 – 5.9-3
- Nomenclature 1-2
- Pass Partition Grooves 5.9-3

Channels,
- Minimum Thickness 5.9-1
- Size 1-1
- Type, Designation 1-2

Chord Lengths 9-70
Circular Rings and Discs, Weights ..... 9-66 – 9-69
Circular Segments, Area 9-70
Cladding ..... 5.3-1, 5.7-11 – 5.7-12, 5.7-14, 5.9-1, 5.9-3, A-1
Cleaning Heat Exchangers ..... 3-6, 4-1, 4-6 – 4-7
Cleanliness Provisions 4-1
Clearance,
- Baffles and Support Plates 5.4-2
- Wrench and Nut 5.11-1

Collar Studs ..... 5.11-2 – 5.11-3
Connections,
- Pipe Tap ..... 5.10-1 – 5.10-2
- Pressure Gage 5.10-2
- Stacked Units 5.10-2
- Test 4-2
- Thermometer Well 5.10-2
- Threaded 3-6
- Vent and Drain 5.7-1, 5.10-1

Consequential Damages 3-6, 5.4-6
Construction Codes 5.1-1
Conversion Factors ..... 9-71 – 9-73
Corrosion Allowance 5.1-3
Correction Factors,
- Bolting Moment 5.11-1
- Mean Temperature Difference ..... 7-4 – 7-5

Compressibility Factors for Gases and Vapors 8-1
Critical Flow Velocity ..... 6-18 – 6-19
Cross Flow Velocity 6-18, 6-23
Critical Properties 8-3

D

Defective Parts ..... 3-5 – 3-6
Definitions 3-1
Density,
- Liquid Petroleum Fractions 8-1
- Organic Liquids 8-1

Design Temperatures of Heat Exchanger Parts, ... 5.1-2
De-tuning Baffles (De-resonating Baffles) 6-23
Diaphragm Installation 4-7
Dimensions,
- Bolting ..... 9-39 – 9-40
- Fittings, Welding ..... 9-3 – 9-4
- Flanges, ASME ..... 9-5 – 9-23
- Pipe, Welded and Seamless 9-2
- Tolerances ..... 2-1 – 2-4, 5.3-1, 5.7-8 – 5.7-11
- Tubing ..... 9.41 – 9.42

Disassembly for Inspection or Cleaning 4-5
Dismantling Clearance 4-1
Distribution Belt (Vapor Belt), ... 6-26, 10-24 – 10-25
Double Tubesheets, ... 5.7-1 – 5.7-8
Drain Connections 5.7-1, 5.10-1, 10-24
Draining Exchangers 3-6, 4-2, 4-5, 5.10-1
Drawings ..... 3-4 – 3-5, 10-24

 ©Tubular Exchanger Manufacturers Association, Inc.

INDEX

Drill Drift Tolerance ..... 5.7-10 – 5.7-11

E

Edge Distance ..... 5.1-3, 9-39 – 9-40
End Flanges 5.11-1
Equivalent Bolting Pressure A-13
Erosion of Tube Ends 5.4-7
Expansion Joints, ... 3-7, 4-5, 5.8-1 – 5.8-17, 6-26, A-19 – A-20
Expansion, Mean Coefficients of Thermal ..... 9-1, 9-53 – 9-58
Expanded Tube Joints ..... 5.7-12 – 5.7-13, 10-31
External Tube Working Pressures ..... 9-47 – 9-49
Externally Sealed Floating Tubesheet ..... 5.5-4 – 5.5-5

F

Fabrication Inspection 3-4
Fabrication Tolerances ..... 2-1 – 2-4
Finish, Tube Holes 5.4-1, 5.7-11, 10-31
Finite Element Analysis ..... 5.8-1 – 5.8-17, 5.11-3, 10-33
Fittings, Dimensions of Welding ..... 9-3 – 9-4
Fixed Tubesheets ..... 6-26, 7-5, 7-8, A-1 – A-7, A-11 – A-20
Flanges,
- ASME Standard ..... 9-5 – 9-23
- Design 4-3, 5.11-2, 10-32
- Large Diameter, Low Pressure 5.11-2, 10-32
- Pass Partition Rib Area 5.11-2
- Protection ..... 3-6 – 3-7
- Tolerances ..... 2-3 – 2-4

Flange Face Facing Finish,
- Permissible Imperfections ..... 2-3 – 2-4

Flexible Shell Elements ..... 5.8-1 – 5.8-17
Floating Head,
- Backing Devices ..... 5.1-3, 5.5-1 – 5.5-2
- Cover ..... 5.5-1 – 5.5-4
- Internal Bolting 5.1-1
- Minimum Inside Depth 5.5-1
- Nomenclature ..... 1-2 – 1-5
- Outside Packed ..... 5.5-3 – 5.5-4, A-10
- Support ..... 5.4-2 – 5.4-5, 5.5-3

Floating Tubesheets ..... 5.5-3 – 5.5-5, A-2 – A-3, A-5, A-10
Floating Tubesheet Skirt ..... 5.5-3 – 5.5-4
Fluid Density 8-1
Fluid Average Temperature ..... 7-5 – 7-8
Fluid Temperature Relations ..... 7-3 – 7-4
Fouling,
- Economics 7-3, 10-36
- Effects ..... 7-2, 10-34 – 10-35
- Indication 4-4

Fouling Resistance, ... 7-2 – 7-3
- Chemical Processing Streams 10-38
- Industrial Fluids 10-37
- Natural Gas-Gasoline Processing Streams 10-38
- Oil Refinery Streams ..... 10-39 – 10-41
- Water 10-41

Foundation Bolts 4-1
Foundations 4-1, 10-13

G

Gaskets,
- Bolt Tightening Procedure ..... 4-3 – 4-4
- Bolted Joints 4-3
- Jacketed 4-7
- Joint Details 5.6-2
- Material 5.6-1
- Pass Partition 5.6-1
- Peripheral 5.6-1
- Replacement 4-7
- Spare 3-7, 5.6-2
- Spiral Wound 5.6-2
- Substitutions 4-7
- Surface Flatness Tolerance 2-3
- Types 5.6-1

General Construction Features ..... 3-7 – 3-8
Guarantees ..... 3-5 – 3-6

H

Handling Tube Bundles 4-6
Hardness Conversion 9-43
Heat Capacity Ratios 8-20
Heat Content Petroleum Fractions 8-2, 8-18
Heat Exchanger Arrangement Diagrams 1-2
Heat Treatment, U-Tubes 5.2-2
Hold Down, ... 5.4-9
- Angles 5.4-9
- Wrap 5.4-9

Holes,
- Baffles and Support Plates 5.4-1
- Diameter and Tolerance, Tubes ..... 5.7-8 – 5.7-9
- Grooving ..... 5.7-11 – 5.7-12
- Tubesheets ..... 5.7-8 – 5.7-9, 5.7-11

Horizontal Vessel Supports ..... 10-2 – 10-16
Hydrostatic Test 4-5, 5.1-1, A-16

I

Impingement Baffles/Plates ..... 5.4-6 – 5.4-7, 6-2, 6-17, 6-26, 10-29 – 10-30
Impingement Rods ..... 10-28 – 10-30
Inspection, Cleanliness 4-1
Inspection of Unit, ... 3-4, 4-4 – 4-5, 5.8-16
Installation of Heat Exchangers ..... 4-1 – 4-2
Instrument Connection ..... 4-2, 5.7-1, 5.10-1 – 5.10-2
Integrally Finned Tubes ..... 5.2-1, 5.4-4 – 5.4-5, 6-17, 7-2
Internal Tube Working Pressure ..... 9-44 – 9-46

J

Joints,
- Bolted 4-3
- Confined 5.6-2
- Leaking 4-2, 4-7
- Packed, Service Limitations 5.1-4
- Seal Welded 5.7-13
- Strength Welded 5.7-13
- Tongue and Groove 4-7
- Unconfined 5.6-2

K

Kettle Type Reboiler 1-1, 5.4-9

L

Lantern Ring ..... 5.5-4 – 5.5-5, A-10
Latent Heat of Various Liquids 8-2, 8-19
Leaks (Tube), Locating ..... 4-5 – 4-6
Leveling Heat Exchangers 4-1
Lifting Devices 3-8, 10-21
Lifting Lugs ..... 3-8, 10-20 – 10-23
Lift Procedure ..... 10-22 – 10-23
Ligaments, Tubesheets Minimum ..... 5.7-10 – 5.7-11
Load Concentration Factor, Flanges 5.11-1
Logarithmic Mean Temperature Difference ..... 7-3 – 7-4
Longitudinal Baffles, ... 5.4-3 – 5.4-4, 7-4

M

Maintenance of Heat Exchangers ..... 4-4 – 4-7
Material Warranties 3-5
Materials,
- Definition of Terms 5.1-1
- International Specifications ..... 9-24 – 9-38

Maximum Unsupported Tube Length ..... 5.4-1, 5.4-4 – 5.4-5
Mean Coefficients of Thermal Expansion ..... 9-53 – 9-58
Mean Metal Temperature ..... 5.1-2, 7-5 – 25
Mechanical Cleaning of Tubes 5.2-3
Metal Temperatures, ... 5.1-2
- Design Temperatures of Heat Exchanger Parts 5.1-2
- Limitations for Pressure Parts 5.1-2
- Minimum Design 5.1-2

Minimum Cleaning Lanes 5.2-3
Minimum Inside Depth of Channels and Bonnets 5.9-1
Minimum Inside Depth of Floating Heads 5.5-1
Minimum Shell/Channel Thickness 5.3-1, 5.9-1

Modulus of Elasticity ..... 9-50 – 9-52
MTD Correction Factors 7-4
Multi-Segmental Baffle Cuts 5.4-1

N
Nameplates 3-4, 5.1-2
Natural Frequencies, Tubes 6-1, 6-9
Nomenclature of Heat Exchanger Components ..... 1-3 – 1-5
Nozzles,
Connections ..... 3-6, 4-1 – 4-2, 5.7-1, 5.10-1 – 5.10-2
Floating Head 5.5-3
Installation 5.10-1
Loadings 5.10-2, 10-32
Split Flanges 5.10-2
Types 5.10-1
Nut Dimensions ..... 9-39 – 9-40

O
Operation of Heat Exchangers ..... 4-2 – 4-3
Operating Procedures ..... 4-2 – 4-3
Outside Packed Floating Head ..... 5.5-3 – 5.5-5
Overall Heat Transfer Coefficient 7-1

P
Packing,
Boxes ..... 5.5-3 – 5.5-4
Material ..... 5.5-4 – 5.5-5
Parts, Replacement 3-6, 4-7
Pass Partition,
Gasket 5.6-1
Grooves ..... 5.1-3, 5.7-14, 5.9-2 – 5.9-3, A-1
Minimum Thickness 5.9-1
Plates ..... 5.1-3, 5.5-3 – 5.5-4, 5.9-1 – 5.9-2
Post Weld Heat Treatment 5.9-2
Rib Area 5.11-2
Weld Size 5.9-2
Pass Partition Plate Formula 5.9-1
Performance Failures 4-1
Performance Guarantees ..... 3-5 – 3-6
Peripheral Bypass Sealing 5.4-8
Peripheral Gasket 5.6-1
Permissible Imperfections ..... 2-3 – 2-4
Periodic Inspection 4-4
Physical Properties of Fluids ..... 8-1 – 8-33
Pipe,
Dimensions of Welded and Seamless 9-2
Shells 5.3-1, 5.4-2
Pipe Tap Connections 5.10-1
Piping Loads 5.10-2, 10-2, 10-32
Plate, Shells 5.3-1
Plugging of Tubes in Tube Bundles 10-24
Post Weld Heat Treatment,
Bonnets and Channels 5.9-2
Floating Head Covers 5.5-1
Preparation of Heat Exchanger for Shipment, ... 3-6 – 3-7
Cleaning 3-6
Damage Protections 3-7
Draining 3-6
Expansion Joint Protection 3-7
Flange Protection 3-6
Threaded Connection Protection 3-6
Pressure Gage Connections 4-2, 5.10-2
Pressure Loss 7-1
Pulling Mechanism 4-6, 5.7-14
Pulsating Fluids 5.4-1, 5.4-5, 5.9-2

R
R Class Heat Exchanger, Definition 5.1-1
Recommended Good Practice ..... 10-1 – 10-42
Replacement Gaskets 4-7
Replacement Parts 3-6, 4-7
Ring Flanges, Split 5.10-2
Ring,
Lantern ..... 5.5-4 – 5.5-5

S
Safety Relief Devices 4-2
Sealing Devices 5.4-8, 5.5-5
Seal Strips 6-2, 6-17
Seal Welded Tube-to-Tubesheet Joints 5.7-13
Segmental Baffles 5.4-1, 5.4-4
Seismic Design ..... 3-7 – 3-8, 10-2, 10-24
Shell Covers, Minimum Thickness 5.3-1
Shells,
Cross Flow ..... 6-15 – 6-18
Diameters 1-1, 5.1-1, 5.3-1
Entrance or Exit Areas ..... 5.4-6 – 5.4-7, 10-24 – 10-27
Longitudinal Stress ..... 5.8-1, 7-8, A-16 – A-17
Minimum Thickness 5.3-1
Size Numbering and Type Designation 1-1
Tolerances ..... 2-1 – 2-4, 5.3-1
Shipment, Preparation of Units ..... 3-6 – 3-7
Shop Operation 3-4
Size Numbering of Heat Exchangers ..... 1-1 – 1-2
Skid,
Bars ..... 5.4-8 – 5.4-9
Rails 5.4-9
Spacers and Tie Rods 5.1-3, 5.4-7
Spare Parts ..... 3-6 – 3-7
Special Close Fit 5.7-9
Specific Heat,
Gases at High Pressure ..... 8-1 – 8-2
Gases, Miscellaneous, Atmospheric Pressure 8-1
Hydrocarbon Gases, Atmospheric Pressure 8-1
Liquids, Miscellaneous 8-1
Petroleum Fractions, Liquid 8-1
Petroleum Fractions, Vapor 8-1
Specification Sheet, Exchanger ..... 3-2 – 3-3
Split Type Nozzle Flanges 5.10-2
Stacked Units 5.10-2, 10-2, 10-16
Starting Operation 4-2
Strength Welded Tube-to-Tubesheet Joints ..... 5.7-11 – 5.7-13
Support Plates, ... 5.4-1 – 5.4-5, 5.5-3
Holes 5.4-1
Spacing ..... 5.4-4 – 5.4-5
Thickness ..... 5.4-2 – 5.4-3
Supports,
Horizontal ..... 3-7, 10-2 – 10-16
Vertical ..... 3-7, 10-17 – 10-21

T
Temperature,
Effectiveness 7-4
Fluid Average 7-5
Limitations, Metal 5.1-2
Multipass Flow 7-4
Shocks 4-2
Test Connections 4-2
Testing,
Pneumatic or Liquid 5.1-2
Standard 4-5, 5.1-1
Test Ring ..... 4-5 – 4-6, A-20
Thermal Conductivity ..... 8-2, 9-59 – 9-65
Thermal Expansion, Mean Coefficients of Metals ..... 9-53 – 9-58
Thermal Performance Test 3-5
Thermal Relations ..... 7-1 – 7-25
Thermometer Connections 5.10-2
Thickness, Minimum,
Baffles ..... 5.4-2 – 5.4-3
Channel Covers ..... 5.9-2 – 5.9-3
Channels and Bonnets 5.9-1
Shells and Shell Covers 5.3-1
Tubesheets ..... 5.7-1 – 5.7-8, A-1 – A-20
Threads ..... 9-39 – 9-40
Tie Rods and Spacers 5.4-7
Tolerances ..... 2-1 – 2-4, 5.3-1
Tube Bundle,
Cleaning Precautions 4-7

 ©Tubular Exchanger Manufacturers Association, Inc.

Cleaning ..... 4-6 – 4-7
Handling 4-6
Plugging Tubes 4-7, 10-24
Removal 4-6
Supports ..... 5.4-4 – 5.4-5, 5.5-3, 6-26
Vibration ..... 3-6, 4-2, 5.4-5 – 5.4-6, 6-1 – 6-27
Tube Expanding ..... 4-7, 5.7-12 – 5.7-13
Tube Holes,
Baffles and Support Plates 5.4-1
Diameters and Tolerances ..... 5.7-8 – 5.7-9
Finish 5.4-1, 5.7-8, 5.7-11, 10-31
Grooving ..... 5.7-11 – 5.7-12
Tube-to-Tubesheet Joints, ... 5.7-8 – 5.7-9, 5.7-11
Expanded ..... 5.7-12 – 5.7-13
Loads ..... 5.7-11 – 5.7-13, 5.8-1, A-19
Seal Welded 5.7-13
Strength Welded 5.7-13
Testing, Welded 5.7-13, 10-31
Welded 5.7-13
Tube Wall Metal Resistance 7-2
Tubes,
Bare Tube Diameters and Gages 5.2-1
Characteristics ..... 9-41 – 9-42
Compressive Stress 6-26, A-18
Finned 5.2-1, 5.4-5, 6-17, 7-2
Leaks 4-5
Length 5.2-1
Longitudinal Stress ..... 5.8-1, 7-8, A-16 – A-18
Maximum Recommended Gages 5.7-10
Natural Frequencies ..... 6-1 – 6-5, 6-10, 6-26
Pattern 5.2-3
Pitch 5.2-3
Plugging in Tube Bundles 4-7, 10-24
Projection 5.7-13
Special Precautions 5.4-4
Split 4-5
Straight 1-1, 5.2-1
Tube Wall Reduction 5.7-12, 10-31
Unsupported Tube Length, Maximum ..... 5.4-4 – 5.4-5
U-Tubes, ... 1-1, 5.2-2
External ..... 9-47 – 9-49
Internal ..... 9-44 – 9-46
Tube Patterns, ... 5.2-3
Rotated Square 5.2-3
Rotated Triangular 5.2-3
Square 5.2-3
Triangular 5.2-3
Tubesheets,
Application Instructions and Limitations A-1
Clad and Faced ..... 5.7-11 – 5.7-12, 5.7-14, A-1
Double Tubesheets ..... 5.7-1 – 5.7-8
Effective Tubesheet Thickness A-1
Externally Sealed Floating ..... 5.5-4 – 5.5-5
Fixed Tubesheets of Differing Thickness ..... A-15 – A-16
Formulas,
Bending ..... A-2 – A-5
Flanged Extension A-9
Shear ..... A-6 – A-8
Shell Longitudinal Stress ..... A-16 – A-17
Tube Allowable Compressive Stress A-18
Tube Longitudinal Stress ..... A-17 – A-18
Tube-to-Tubesheet Joint Loads A-19
Ligaments ..... 5.7-10 – 5.7-11
Minimum Thickness 5.7-1
Packed Floating Tubesheet Type Exchangers ..... 5.1-4, 5.5-3 – 5.5-5, A-10
Pass Partition Grooves 5.7-14
Pulling Eyes 5.7-14
Special Cases A-20
Tube Holes in Tubesheets ..... 5.7-8 - 5.7-11, 10-31
Type Designation of Exchangers 1-1

U
Unsupported Tube Length, Maximum ..... 5.4-4 – 5.4-5
U-Tubes 1-1, 5.2-2
U-Tube Bend Requirements and Spacing 5.2-2
U-Tube Rear Support Plate 5.4-2, 5.4-5
Users Note viii

V
Velocity,
Critical Flow ..... 6-18 – 6-19
Cross Flow ..... 6-15 – 6-17
Vent and Drain Connections 5.7-1, 5.10-1
Vertical Vessel Supports ..... 10-17 – 10-19
Vibration, ... 6-1 - 6-27
Acoustic Resonance and Coupling 6-1
Damage Patterns 6-1
Damping ..... 6-13 – 6-14
Designs and Considerations ..... 6-25 – 6-26
Failure Regions ..... 6-1 – 6-2
Fluid Elastic Parameter ..... 6-2 – 6-3
Fundamental Natural Frequency ..... 6-3 – 6-5
Nozzle Entrance and Exit Areas 6-2
Selected References 6-27
Tube Bundle 5.4-6
Tube Natural Frequencies ..... 6-1 – 6-5, 6-2, 6-10, 6-26
Turbulent Buffeting Amplitude ..... 6-20 – 6-21
U-Bends 6-2, 6-26
Vortex Shedding Amplitude 6-20
Viscosity,
Conversion Factors 8-2, 8-26
Gases and Vapors, Atmospheric Pressure 8-2, 8-32
Gases and Vapors, High Pressure ..... 8-2 – 8-3, 8-33
Hydrocarbons and Petroleum Fractions ..... 8-2, 8-29 – 8-30
Liquids, Miscellaneous 8-2, 8-29

W
Wall Resistance, Finned and Bare Tubes 7-2
Weights of Circular Rings & Discs ..... 9-66 – 9-69
Weight of Tubing 9-41
Welding Fittings, Dimensions ..... 9-3 – 9-4
Welded and Seamless Pipe, Dimensions 9-2
Welded Tube Joints 5.7-13

 ©Tubular Exchanger Manufacturers Association, Inc.